Regular Meeting

Mission: "The mission of High Plains Community Schools is to provide an educational environment which develops citizens who are lifelong learners and can contribute to a global society"

The Regular monthly meeting of the High Plains Community Schools Board of Education was held on Monday, December 9, 2024 at HPC Elementary- Clarks BOE Room (June-Dec), 205 W. Pearl St., Clarks, NE 68628. The meeting was called to order at 7:00 AM.

1. Call Meeting to Order

1.1. Public Meeting Announcement

1.2. Open Meetings Act Recognition

1.3. Board Member Attendance, Roll Call

1.4. Consent Agenda
A motion to approve the consent agenda as presented for past minutes, bills, and financial statements Passed with a motion by Nathan Spurling and a second by Erin Meyer.
Terry Carlstrom: Yea, Erin Meyer: Yea, Megan Pike: Yea, Nathan Spurling: Yea, Kraig Urkoski: Yea, Shane Van Pelt: Yea

1.4.1. Consider Minutes of Previous Meeting(s) and Their Approval (Appendix A)

Regular Meeting

The regular monthly meeting of the High Plains Community Schools Board of Education was held on Monday, November 11, 2024 at HPC Elementary- Clarks BOE. The meeting was called to order at 6:30 PM by President Shane Van Pelt. Present were Terry Carlstrom, Erin Meyer, Megan Pike, Nathan Spurling, Kraig Urkoski and Shane Van Pelt. There were 4 visitors.

A motion to approve the consent agenda as presented for past minutes, bills, and financial statements passed with a motion by Nathan Spurling and a second by Erin Meyer. Yea: 6, Nay: 0

Two members of the student council, Addie Lindburg and Courtney Carlstrom updated the board on canned food drive, advisory competitions, teacher of the month and other service projects.

Elementary Principal Report – Mrs.Helgoth : Student performance and community connections update; Professional development update; Student safety update; School culture and events.

Junior High & High School Principal Report – Mr. Fisher: Threat assessment training; Red Ribbon week; NE athletics pep rally; Proficiency scales; MTSS/CIP process; CCC classes.

AD Report – Mr. Wood: NSAA Believers and Achievers; Fall season sports; JH Quiz bowl; FFA; Veteran's Day program; District AD meeting; CRC One-Act; Enrollment numbers; On Time Sports calendars.

Superintendent Report – Mr. Brown: ESU7 grant writer; ESU7 professional development day; NASB conference; Superintendent evaluation; Negotiations; Audit update.

Computer Science & Technology Act – Mr. Fisher updated the board on HPC being in compliance with the Computer Science & Technology Act.

School Board - HS Graduation Report – Mr. Fisher updated the board with HPC graduation requirements.

Americanism Review (Elementary & Secondary) – Mr. Fisher and Mrs. Helgoth updated the board on how HPC is compliant with the Americanism review. There was no public comment given.

Financial Literacy Act – Mr. Fisher updated the board on educational requirements for the Financial Literacy Act.

The board reviewed, discussed, and take all necessary action in completing the review of all the 1000s section of the HPC board policies. A motion to approve the review of the 1000 series of the HPC board policies (those policies include #1001, #1002, #1003) passed with a motion by Nathan Spurling and a second by Megan Pike. Yea: 6, Nay: 0

The board took all necessary action in reviewing, discussing and adopting the policies for the 3000 section of the HPC school board policies (#3026, #3034, #3038, #3042, #3043, #3051, #3054).
A motion to approve the adoption of the following policies for the 3000s section of the HPC Board of Education, those policies include the following, #3026, #3034, #3038, #3042, #3043, #3051, & #3054 passed with a motion by Erin Meyer and a second by Nathan Spurling. Yea: 6, Nay: 0

The board reviewed, discussed, and took all necessary action in completing the review of all the 3000s section of the HPC board policies. A motion to approve the review of the 3000 series of the HPC board policies (those policies include #3001, #3002, #3003, #3003.1, #3004, #3004.1, #3005, #3006, #3007, #3008, #3009, #3010, #3011, #3012, #3013, #3014, #3015, #3016, #3017, #3019,

#3020, #3021, #3022, #3023, #3024, #3025, #3027, #3028, #3029, #3030, #3031, #3032, #3033, #3035, #3036, #3037, #3039, #3040, #3041, #3044, #3045, #3046, #3047, #3048, #3049, #3050, #3052, #3053, #3056, #3057, #3058, #3059, #3060) passed with a motion by Erin Meyer and a second by Megan Pike. Yea: 6, Nay: 0

The board discussed, and took all necessary action for a design-build resolution for HPC track slab project. A motion to approve the resolution for the HPC track slab project passed with a motion by Erin Meyer and a second by Nathan Spurling. Yea: 6, Nay: 0

A motion to adjourn the meeting at 7:58 p.m. and set the next regular meeting for December 9 at 7 AM passed with a motion by Nathan Spurling and a second by Megan Pike. Yea: 6, Nay:0

Respectfully submitted,

Erin Meyer, Board secretary

1.4.2. Consider Current Bills and Their Approval (Appendix B)

Checking Account ID 01 Fund Number 01 General Fund

Vendor Name	Invoice Number	Description	Amount
ACTIVITY FUND	Jostens bill	diploma covers	250.25
ACTIVITY FUND	Sams Club Nov 2024	office supplies	42.24
Total ACTIVITY FUND			292.49
AMERICAN FIRE & LIFE SAFETY, L.L.C.	4466	annual fire alarm monitoring	900.00
Total AMERICAN FIRE & LIFE SAFETY, L.L.C.			900.00
AURORA NEWS REGISTER	89123/89227/89277	board advertising	142.19
Total AURORA NEWS REGISTER			142.19
BLACK HILLS ENERGY	20241204	monthly Polk	444.25
Total BLACK HILLS ENERGY			444.25
BLACK HILLS ENERGY	20241204	monthly Polk	355.25
Total BLACK HILLS ENERGY			355.25
BLACK HILLS ENERGY	20241204	monthly	264.86
Total BLACK HILLS ENERGY			264.86
BLACK HILLS ENERGY	20241204	monthly addition	1,382.71
Total BLACK HILLS ENERGY			1,382.71
CARL'S SKRAP	248472	monthly trash Clarks	190.00
CARL'S SKRAP	248473	monthly trash Polk	230.00
Total CARL'S SKRAP			420.00
CENTRAL TRUE VALUE	A600368	custodial	18.75
Total CENTRAL TRUE VALUE			18.75
CENTRAL VALLEY AG	Nov 2024	fuel/vehicle repairs	3,136.93
Total CENTRAL VALLEY AG			3,136.93
CLARKS LUMBER	85925	custodial Polk	13.16
CLARKS LUMBER	86128	custodial Polk	119.88
CLARKS LUMBER	86162	custodial Clarks	7.98
Total CLARKS LUMBER			141.02
CORNERSTONE BANK	Safe dep box 24/25	safe deposit box rental	10.00
Total CORNERSTONE BANK			10.00
CULLIGAN of YORK	20241205	water supplies Clarks	361.50
Total CULLIGAN of YORK			361.50
DIODE COMMUNICATIONS	20241204	openpath/rhombus	1,211.38
Total DIODE COMMUNICATIONS			1,211.38
EAKES OFFICE SOLUTIONS	INV601323	monthly fax fee	56.64
EAKES OFFICE SOLUTIONS	INV604175	custodial	106.70
EAKES OFFICE SOLUTIONS	INV607254	2 batteries for floor machine	674.96
Total EAKES OFFICE SOLUTIONS			838.30
ECOLAB	6733242	pest control Clarks	103.91

Vendor Name	Invoice Number	Description	Amount
ECOLAB	6733566	East bldg pest control	109.68
Total ECOLAB			213.59
ECONOMY HOMETOWN MARKET	20241205	FCS supplies	105.43
Total ECONOMY HOMETOWN MARKET			105.43
ESU #7	October 2024	sped services	24,763.63
Total ESU #7			24,763.63
ESU 7 NETWORK SUPPORT	LANMAN Nov 2024	tech support	8,525.00
ESU 7 NETWORK SUPPORT	Newtork Ops Nov 2024	tech repairs	18.75
ESU 7 NETWORK SUPPORT	Tech Repairs Oct 24	monthly network billing	196.88
ESU 7 NETWORK SUPPORT	Tech supplies Oct 24	monthly network billing	579.00
ESU 7 NETWORK SUPPORT	Tech support	monthly network billing	8,525.00
Total ESU 7 NETWORK SUPPORT			17,844.63
ESU7	Oc 2024 Reg Ed LMHP	Reg Ed LMHP	3,519.15
ESU7	Renaissance/eduCLIMB	software and prof dev	7,681.62
Total ESU7			11,200.77
FORWARD CPA, LLC	112024	Audit	13,900.00
Total FORWARD CPA, LLC			13,900.00
GO PHYSICAL THERAPY	October 2024	OT/PT services	6,943.52
GO PHYSICAL THERAPY	Sept 2024	Sept OT/PT services	6,217.68
Total GO PHYSICAL THERAPY			13,161.20
HAMILTON COMMUNICATIONS	20241204	internet	135.08
Total HAMILTON COMMUNICATIONS			135.08
HOT LUNCH FUND	Nov 2024 board meeti	Nov 2024 board meeting food	41.20
Total HOT LUNCH FUND			41.20
HYDROSCAPE, LLC	6121	shutdown maintenance Clarks	75.00
Total HYDROSCAPE, LLC			75.00
ISLAND SUPPLY WELDING CO	248472	supplies Kraeger	24.00
Total ISLAND SUPPLY WELDING CO			24.00
J W PEPPER & SON INC	366924137	supplies Gansebom	72.98
Total J W PEPPER & SON INC			72.98
KLEIN'S BLUE RIVER POWER & RENTAL	28455	mower bag Polk	69.25
Total KLEIN'S BLUE RIVER POWER & RENTAL			69.25
KLINGSPORN, BRITTANY	Praxis	Praxis test reimbursement	267.80
Total KLINGSPORN, BRITTANY			267.80
KWIK STOP	9327814	fuel	735.16
KWIK STOP	9434771	fuel	449.81
Total KWIK STOP			1,184.97

Vendor Name	Invoice Number	Description	Amount
MANSTEDT K-LAWN, LLC.	2024-085	lawncare Clarks	1,500.00
Total MANSTEDT K-LAWN, LLC.			1,500.00
MENARDS	94218G	supplies Kraeger	119.96
MENARDS	95390	THofmann supplies	139.25
MENARDS	95828	custodial supplies	53.96
Total MENARDS			313.17
MID AMERICAN RESEARCH	0835160-IN	custodial Polk	1,171.00
MID AMERICAN RESEARCH	0835161-IN	custodial Clarks	1,219.00
Total MID AMERICAN RESEARCH			2,390.00
Myer's Insurance Inc	3457	bond	100.00
Total Myer's Insurance Inc			100.00
NEBRASAK CENTER for the EDUCATION of CHILDREN who are BLIND or VISUALLY IMP	T-971	sped services	3,520.00
Total NEBRASAK CENTER for the EDUCATION of CHILDREN who are BLIND or VISUALLY IMP			3,520.00
NORTHEAST NEBRASKA TELEPHONE COMPANY	20241121	monthly telephone Clarks	230.92
Total NORTHEAST NEBRASKA TELEPHONE COMPANY			230.92
ONE SOURCE	2022168061	background checks	36.50
Total ONE SOURCE			36.50
PETTY CASH FUND	Nov 2024	misc	362.60
Total PETTY CASH FUND			362.60
POLK CO HEALTH DEPT	CPR test out	CPR test out	51.13
POLK CO HEALTH DEPT	Nov 2024	nursing	3,316.95
POLK CO HEALTH DEPT	October 2024 Nursing	Oct 2024 Nursing	5,245.73
Total POLK CO HEALTH DEPT			8,613.81
POLK COUNTY NEWS	5683	board advertising	119.75
Total POLK COUNTY NEWS			119.75
POLK COUNTY RPPD	20241205	monthly clarks	715.79
POLK COUNTY RPPD	20241205-0001	monthly clarks	1,782.69
POLK COUNTY RPPD	20241205-0002	monthly clarks	253.14
POLK COUNTY RPPD	20241205-0003	monthly clarks	23.08
Total POLK COUNTY RPPD			2,774.70
POLK LIGHT & WATER DEPT	20241205	monthly Polk	4,346.01
Total POLK LIGHT & WATER DEPT			4,346.01
RALLY AUTO PARTS	378870	bus wiper blade	37.98
RALLY AUTO PARTS	379106	supplies - trailer	36.77
Total RALLY AUTO PARTS			74.75
RIEKEN, ALAN	Grass removal 2024	grass removal Clarks	400.00
Total RIEKEN, ALAN			400.00
STRIV	4432	website maintenance	995.00

Vendor Name	Invoice Number	Description	Amount
Total STRIV			995.00
STROMSBURG WATER & CONDIT	20241205	custodial Polk	70.00
Total STROMSBURG WATER & CONDIT			70.00
TIME MANAGEMENT SYSTMS	323399		59.30
Total TIME MANAGEMENT SYSTMS			59.30
TRUCK CENTER COMPANIES	XA105083921:01	DEF	202.95
Total TRUCK CENTER COMPANIES			202.95
U.S. BANK	4484730001185957D	credit card	1,879.49
U.S. BANK	4484730153582126De	credit card	250.43
U.S. BANK	4484731000076031D	credit card	2,525.72
U.S. BANK	4484731000076130	credit card	3,250.58
Total U.S. BANK			7,906.22
VILLAGE OF CLARKS	213268	monthly water/sewer Clarks	434.31
Total VILLAGE OF CLARKS			434.31
VYE BROADBAND	20241121	monthly	388.00
Total VYE BROADBAND			388.00
WINDSTREAM	20241204	monthly East bldg	333.46
Total WINDSTREAM			333.46
WINDSTREAM	20241121	telephone charges West bldg	173.70
Total WINDSTREAM			173.70
YANDA'S MUSIC & PRO AUDIO INC.	697375A	credit	(62.00)
YANDA'S MUSIC & PRO AUDIO INC.	702601	credit	(2.00)
YANDA'S MUSIC & PRO AUDIO INC.	724486	instrument repair	88.75
Total YANDA'S MUSIC & PRO AUDIO INC.			24.75
YODER, NORMAN	Safetyplan 24/25 rev	safety plan review	556.28
Total YODER, NORMAN			556.28
YORK COUNTY CLERK	24009	Election costs	100.00
Total YORK COUNTY CLERK			100.00
Fund Number 01			129,005.34
Checking Account ID 01			129,005.34

Vendor Name	Invoice Number	Description	Amount
Checking Account ID 01	Fund Number 01	General Fund	
ATS, LLC	2623	night custodial services	8,984.00
Total ATS, LLC			8,984.00
KSB SCHOOL LAW	16825	legal fees	204.00
KSB SCHOOL LAW	17037	legal fees	871.00
KSB SCHOOL LAW	17259	legal fees	1,004.00
KSB SCHOOL LAW	17478	legal fees	3,258.00
KSB SCHOOL LAW	17709	legal fees	374.00
Total KSB SCHOOL LAW			5,711.00
Fund Number 01			14,695.00
Checking Account ID 01			14,695.00
		+	129,005.34
			143,700.34

Cornerstone	179,494.76
BCBS	61,232.68
Cross County	1,126.01
NIS LTD	380.44
Union Bank & Trust	1,483.61
EFTPS	47,915.05
NE Dept of Rev	7,364.36
NPERS	44,868.55

Total Transfer

492,510.56

Others

Ameritas	596.46
Emp. Benefit	29.23
Hpc 125 Plan	1515.81
GF	992.39
Mutual of Omaha	1044.27
Misc	1311.00
Transamerica	255.60
	5744.76

1.4.3. Consider Financial Statements and Treasurer's Report (Appendix C)

1.4.3.1. Activity Account Statements

Revenue Summary Report
Processing Month: 11/2024

Fund: 55 Activities Fund K-6

Account Number	Description	Revised Budget	During Month	To Date	% of Budget	Budget Balance
55 1720	BOOKSTORE SALES	0.00	0.00	1,160.80	0.00	(1,160.80)
55 1920	CONTRIBUTIONS & DONATIONS	0.00	0.00	11.73	0.00	(11.73)
	Subtotal: LOCAL RECIEPTS	0.00	0.00	1,172.53	0.00	(1,172.53)
55 5200	TRANSFERS	0.00	0.00	2,000.00	0.00	(2,000.00)
	Subtotal: NON-REVENUE RECEIPTS	0.00	0.00	2,000.00	0.00	(2,000.00)
	Fund Total:	0.00	0.00	3,172.53	0.00	(3,172.53)

Revenue Summary Report
Processing Month: 11/2024

	Revised Budget	During Month	To Date	% of Budget	Budget Balance
Grand Total:	0.00	0.00	3,172.53	0.00	(3,172.53)

Elementary Activities

$ 11,277.64

Board Report - Board

Vendor Name	Invoice Number	Description	Amount
Checking Account ID 55	Fund Number 55	Activities Fund K-6	
HPC GENERAL FUND	20241101-0001	CC Payment Elem Olympic Games	42.23
Total HPC GENERAL FUND			42.23
Fund Number 55			42.23
Checking Account ID 55			42.23

Vendor Name	Invoice Number	Description	Amount
Checking Account ID 05	Fund Number 05	Activity Fund 7-12	
AURORA NEWS REGISTER	4384	SENIOR BANNERS	826.41
Total AURORA NEWS REGISTER			826.41
CASH	CRC ONE ACT CONC/IC	CRC ONE ACT CASH BOXES FOR CONC/ICE CREA	500.00
Total CASH			500.00
Fillmore Central High School	JH WRESTLING MEET	JH WRESTLING MEET ENTRY FEE	15.00
Total Fillmore Central High School			15.00
Godfathers Pizza	JUNIOR CLASS FUND	JUNIOR CLASS PIZZAS	1,802.00
Total Godfathers Pizza			1,802.00
HENRICKS, CHERYL	CRC ONE ACT JUDGE	CRC ONE ACT JUDGE	231.00
Total HENRICKS, CHERYL			231.00
Hinz, Laurie	CRC ONE ACT JUDGE	CRC ONE ACT JUDGE	159.00
Total Hinz, Laurie			159.00
HPC GENERAL FUND	BOOK KEEPER NOV BILL	CHEER/STUCO/FFA	844.44
HPC GENERAL FUND	BRE NOV BILLS	STUCO ICE CREAM SUPPLIES	41.34
HPC GENERAL FUND	MICAH NOV BILLS	ONE ACT/SOFTBALL CREDIT/HOLY GROUNDS/FFA	488.75
Total HPC GENERAL FUND			1,374.53
In the Spotlight Costume Shop LLC	171	ONE ACT COSTUMES	893.54
Total In the Spotlight Costume Shop LLC			893.54
JOSTENS INC	35105149	COVERS FOR DIPLOMAS/PACKAGING/SHIPPING	250.25
Total JOSTENS INC			250.25
KOLTEMAN, CLARK	CRC ONE ACT JUDGE	CRC ONE ACT JUDGE	190.00
Total KOLTEMAN, CLARK			190.00
MENARDS	94132	ONE ACT SAND TUBES	23.90
MENARDS	94218A	BIRTHING LAB CAMERA INSTALL	151.75
Total MENARDS			175.65
Nevco	FINAL VIDEOBRD PAYME	FINAL VIDEOBOARD PAYMENT	13,229.50
Total Nevco			13,229.50
Northern Wreaths	INV0058	MUSIC WREATH FUNDRAISER	1,401.00
Total Northern Wreaths			1,401.00
Ravenna Public Schools	RAVENNA HS WRESTLING	RAVENNA HS WRESTLING TOURNAMENT ENTRY FE	120.00
Total Ravenna Public Schools			120.00
Rood, Randy	CRC ONE ACT JUDGE	CRC ONE ACT JUDGE	247.00
Total Rood, Randy			247.00

Vendor Name	Invoice Number	Description	Amount
SAM'S CLUB/SYNCHRONY BANK	ONLINE BILL PAYMENT	MONTHLY BILL PAID ONLINE	875.20
Total SAM'S CLUB/SYNCHRONY BANK			875.20
Sandy Creek Public Schools	MS WRESTLING ENTRY	MIDDLE SCHOOL WRESTLING MEET ENTRY FEE	10.00
Total Sandy Creek Public Schools			10.00
SPORTS GRAPHICS	44911	CRC BANNER	85.00
Total SPORTS GRAPHICS			85.00
WALSWORTH PUBLISHING CO	5-10723-0	YEARBOOK PAYMENT	3,000.00
Total WALSWORTH PUBLISHING CO			3,000.00
White, Patrick	ONE ACT RE-ISSUED	RE-ISSUED CHECK FOR ONE-ACT HELP	100.00
Total White, Patrick			100.00
Fund Number 05			25,485.08
Checking Account ID 05			25,485.08

Fund: 05 Activity Fund 7-12

Account Number	Description	Revised Budget	During Month	To Date	% of Budget	Budget Balance
05 1510	INTEREST ON INVESTMENTS	0.00	41.13	129.29	0.00	(129.29)
05 1710	ACTIVITIES Admissions Receipts	0.00	2,592.71	35,367.55	0.00	(35,367.55)
05 1730	STUDENT ORGANIZATION DUES	0.00	25.00	1,300.00	0.00	(1,300.00)
05 1740	STUDENT TECH FEES	0.00	0.00	70.00	0.00	(70.00)
05 1750	REVENUE FROM ACTIVITIES	0.00	12,914.80	22,185.65	0.00	(22,185.65)
05 1790	Activity Income from other Schools	0.00	1,010.00	8,034.53	0.00	(8,034.53)
05 1920	CONTRIBUTIONS & DONATIONS	0.00	1,500.00	21,455.27	0.00	(21,455.27)
05 1990	MISCELLANEOUS LOCAL REVENUE	0.00	1,751.30	2,114.36	0.00	(2,114.36)
Subtotal:	LOCAL RECIEPTS	0.00	19,834.94	90,656.65	0.00	(90,656.65)
	Fund Total:	0.00	19,834.94	90,656.65	0.00	(90,656.65)

Revenue Summary Report

Processing Month: 11/2024

	Revised Budget	During Month	To Date	% of Budget	Budget Balance
Grand Total:	0.00	19,834.94	90,656.65	0.00	(90,656.65)

Check Reconciliation Report - Summary

Activity Fund

Processing Month	Checking Account ID	Statement Balance	Outstanding Total	Balance on Books	Cash Account Balance	Difference
11/2024	05	201,113.82	(629.00)	200,484.82	200,519.82	(35.00)
	Total:	201,113.82	(629.00)	200,484.82	200,519.82	(35.00)

1.4.3.2. Building Fund Account Statements

Check Reconciliation Report - Summary
BUILDING FUND

Processing Month	Checking Account ID	Statement Balance	Outstanding Total	Balance on Books	Cash Account Balance	Difference
11/2024	08	2,677,761.46	0.00	2,677,761.46	2,677,761.46	0.00
	Total:	2,677,761.46	0.00	2,677,761.46	2,677,761.46	0.00

1.4.3.3. Depreciation Fund Account Statements

Check Reconciliation Report - Summary

DEPRECIATION

Processing Month	Checking Account ID	Statement Balance	Outstanding Total	Balance on Books	Cash Account Balance	Difference
11/2024	02	465,002.76	0.00	465,002.76	465,002.76	0.00
	Total:	465,002.76	0.00	465,002.76	465,002.76	0.00

1.4.3.4. General Fund Account Statements

December Board Meeting/November Receipts

Financial Statement	First State SN	First State MM	Cornerstone Pay	First State PC	Bank of Clarks CD
Bank Balance/October	$442,485.20	$1,991,528.21	$15,348.35	$3,181.09	**$89,348.43**
Deposits for month	$500,000.00	$130,799.49	$191,423.67	$200.60	
Interest for month	$181.39	$4,170.98	$0.00	$1.14	
Total available	$942,666.59	$2,126,498.68	$206,772.02	$3,382.83	
Disbursements	$494,540.02	$500,004.20	$191,423.67	$160.60	
Bank Balance	$448,126.57	$1,626,494.48	$15,348.35	$3,222.23	
Outstanding Checks	$8,600.85				
Bank Balance	**$439,525.72**	**$1,626,494.48**	**$15,348.35**	**$3,222.23**	
Certificates of Deposit		**85,469.43**			
Total Money available	**$2,259,408.64**				
December Disbursements	$492,510.56				

Receipts:	Budget	November	Last mo Y-T-D	Year to Date
1100 Taxes	$4,953,000.00	$49,954.31	$1,149,541.37	$1,199,495.68
1115 Carline tax	$5,000.00	$0.00	$740.08	$740.08
1120 Public Power District Sales	$11,000.00	$0.00	$0.00	$0.00
1125 Motor Vehicle Taxes	$200,000.00	$12,959.50	$29,981.24	$42,940.74
1510 Interest	$28,000.00	$4,983.14	$11,664.47	$16,647.61
1911 Local License Fees	$800.00	$1,830.00	$320.00	$2,150.00
1925 Categorical Grants	$290.00	$0.00	$0.00	$0.00
1990 Other Local Receipts	$15,500.00	$10,833.56	$1,884.54	$12,718.10
2110 County Fines	$15,000.00	$1,618.05	$2,197.26	$3,815.31
3110 State Aid	$343,742.00	$0.00	$72,683.00	$72,683.00
3120 Sp. Ed. Program	$150,000.00	$0.00	$0.00	$0.00
3125 Sp. Ed. Transportation	$5,000.00	$0.00	$0.00	$0.00
3130 Homestead Exemption	$0.00	$0.00	$0.36	$0.36
3131 Property Tax Credit	$310,000.00	$0.00	$0.00	$0.00
3180 Pro-Rata Vehicle	$9,000.00	$15.30	$1,302.27	$1,317.57
3400 State Apportionment	$35,000.00	$0.00	$0.00	$0.00
3512 Dist Ed Incentive	$2,000.00	$0.00	$0.00	$0.00
3535 High Ability Learners	$2,500.00	$0.00	$0.00	$0.00
3551 CTE Grant	$0.00	$0.00	$0.00	$0.00
4212 Title II	$0.00	$0.00	$0.00	$0.00
4310 REAP	$0.00	$0.00	$0.00	$0.00
4421 IDEA	$0.00	$0.00	$0.00	$0.00
4505 Title	$27,000.00	$35,403.00	$0.00	$35,403.00
4516 IDEA Preschool Enrollment Pov	$0.00	$0.00	$2,081.00	$2,081.00
4518 IDEA	$0.00	$0.00	$0.00	$0.00
4524 Federal Non-categorical receipts	$89,000.00	$0.00	$0.00	$0.00
4530 Grants	$0.00	$0.00	$0.00	$0.00
4708 Medicaid	$4,400.00	$0.00	$807.86	$807.86
4709 Medicaid Admin Activities	$14,000.00	$0.00	$568.49	$568.49
4998 ESSRS III	$0.00	$0.00	$0.00	$0.00
5300 Sale of Property	$0.00	$0.00	$50.00	$50.00
TOTAL	**$6,220,232.00**	**$117,596.86**	**$1,273,821.94**	**$1,391,418.80**
3100 Hot Lunch/Non Program			$13,470.13	$13,470.13
				$1,404,888.93

Check Reconciliation Report - Summary
GENERAL FUND

Processing Month	Checking Account ID	Statement Balance	Outstanding Total	Balance on Books	Cash Account Balance	Difference
11/2024	01	448,126.57	(4,513.36)	443,613.21	443,613.21	0.00
11/2024	03	1,626,494.48	1.62	1,626,496.10	1,626,496.10	0.00
	Total:	2,074,621.05	(4,511.74)	2,070,109.31	2,070,109.31	0.00

Check Reconciliation Report - Summary

PETTY CASH

Processing Month	Checking Account ID	Statement Balance	Outstanding Total	Balance on Books	Cash Account Balance	Difference
11/2024	56	3,222.23	(252.00)	2,970.23	2,970.23	0.00
	Total:	3,222.23	(252.00)	2,970.23	2,970.23	0.00

Check Reconciliation Report - Summary

125 PLAN

Processing Month	Checking Account ID	Statement Balance	Outstanding Total	Balance on Books	Cash Account Balance	Difference
11/2024	57	9,900.35	0.00	9,900.35	9,900.35	0.00
	Total:	9,900.35	0.00	9,900.35	9,900.35	0.00

Check Reconciliation Report - Summary
EMPLOYEE BENEFIT FUND

Processing Month	Checking Account ID	Statement Balance	Outstanding Total	Balance on Books	Cash Account Balance	Difference
11/2024	58	12,069.68	0.00	12,069.68	12,069.68	0.00
	Total:	12,069.68	0.00	12,069.68	12,069.68	0.00

Check Reconciliation Report - Summary

PAYROLL

Processing Month	Checking Account ID	Statement Balance	Outstanding Total	Balance on Books	Cash Account Balance	Difference
11/2024	59	15,348.35	0.00	15,348.35	15,348.35	0.00
	Total:	15,348.35	0.00	15,348.35	15,348.35	0.00

Regular; Processing Month 11/2024; Accounts to Include Accounts with Activity; Fund Number 01, 02, 08, 56, 57, 58, 59

Fund: 01 General Fund

Account Number	Description	Revised Budget	During Month	To Date	% of Budget	Budget Balance
01 1100	LOCAL DISTRICT TAXES	4,953,000.00	49,954.31	1,199,495.68	24.22	3,753,504.32
01 1115	CARLINE/AIRLINE TAXES	5,000.00	0.00	740.08	14.80	4,259.92
01 1120	Public Power District Sales Tax	11,000.00	0.00	0.00	0.00	11,000.00
01 1125	MOTOR VEHICLE TAXES	200,000.00	12,959.50	42,940.74	21.47	157,059.26
01 1510	INTEREST ON LOCAL REVENUE	28,000.00	4,352.37	14,701.35	52.50	13,298.65
01 1911	LOCAL LICENSE FEES	800.00	1,830.00	2,150.00	268.75	(1,350.00)
01 1925	CATEGORICAL GRANTS FROM CORPORATIONS & O	290.00	0.00	0.00	0.00	290.00
01 1990	OTHER LOCAL RECEIPTS	15,500.00	10,833.56	12,718.10	82.05	2,781.90
	Subtotal: LOCAL RECIEPTS	5,213,590.00	79,929.74	1,272,745.95	24.41	3,940,844.05
01 2110	COUNTY FINES & LICENSE FEE	15,000.00	1,618.05	3,815.31	25.44	11,184.69
	Subtotal: COUNTY AND ESU RECEIPTS	15,000.00	1,618.05	3,815.31	25.44	11,184.69
01 3110	STATE AID	343,742.00	0.00	72,683.00	21.14	271,059.00
01 3120	SPECIAL EDUCATION	150,000.00	0.00	0.00	0.00	150,000.00
01 3125	SPECIAL ED-TRANS	5,000.00	0.00	0.00	0.00	5,000.00
01 3130	HOMESTEAD EXEMPTION	0.00	0.00	0.36	0.00	(0.36)
01 3131	RELIEF TO PROPERTY TAXPAYE	310,000.00	0.00	0.00	0.00	310,000.00
01 3180	PRO-RATE MOTOR VEHICLE	9,000.00	15.30	1,317.57	14.64	7,682.43
01 3400	STATE APPORTIONMENT	35,000.00	0.00	0.00	0.00	35,000.00
01 3512	QUALITY ED GRANT	2,000.00	0.00	0.00	0.00	2,000.00
01 3535	HIGH ABILITY LEARNERS	2,500.00	0.00	0.00	0.00	2,500.00
	Subtotal: STATE RECEIPTS	857,242.00	15.30	74,000.93	8.63	783,241.07
01 4505	TITLE I	27,000.00	35,403.00	35,403.00	131.12	(8,403.00)
01 4516	IDEA PRESCHOOL(619) BASE ALLOCATION	0.00	0.00	2,081.00	0.00	(2,081.00)
01 4524	OTHER FEDERAL NON-CATEGORICAL REC	89,000.00	0.00	0.00	0.00	89,000.00
01 4708	MEDICAID IN PUBLIC SCHOOLS	4,400.00	0.00	807.86	18.36	3,592.14
01 4709	MEDICAID ADMIN ACTIVITIES	14,000.00	0.00	568.49	4.06	13,431.51
	Subtotal: FEDERAL RECEIPTS	134,400.00	35,403.00	38,860.35	28.91	95,539.65
01 5300	SALE OF PROPERTY	0.00	0.00	50.00	0.00	(50.00)
	Subtotal: NON-REVENUE RECEIPTS	0.00	0.00	50.00	0.00	(50.00)
01 6406	IDEA	0.00	0.00	0.00	0.00	0.00
	Subtotal: 6000	0.00	0.00	0.00	0.00	0.00
	Fund Total:	6,220,232.00	116,966.09	1,389,472.54	22.34	4,830,759.46

Revenue Summary Report

Processing Month: 11/2024

Regular; Processing Month 11/2024; Accounts to Include Accounts with Activity; Fund Number 01, 02, 08, 56, 57, 58, 59

Fund: 02 Depreciation Fund

Account Number	Description	Revised Budget	During Month	To Date	% of Budget	Budget Balance
02 1510	INTEREST ON INVESTMENTS	0.00	92.35	291.41	0.00	(291.41)
Subtotal:	LOCAL RECIEPTS	0.00	92.35	291.41	0.00	(291.41)
	Fund Total:	0.00	92.35	291.41	0.00	(291.41)

Revenue Summary Report

Processing Month: 11/2024

Regular; Processing Month 11/2024; Accounts to Include Accounts with Activity; Fund Number 01, 02, 08, 56, 57, 58, 59

Fund: 08 Building Fund

Account Number	Description	Revised Budget	During Month	To Date	% of Budget	Budget Balance
08 1100	TAXES	0.00	11,904.40	285,873.97	0.00	(285,873.97)
08 1115	CARLINE TAXES	0.00	0.00	176.37	0.00	(176.37)
08 1510	INTEREST ON INVESTMENTS	0.00	530.84	1,632.45	0.00	(1,632.45)
08 1990	MISCELLANEOUS LOCAL REVENUE	0.00	0.00	(35.00)	0.00	35.00
	Subtotal: LOCAL RECIEPTS	0.00	12,435.24	287,647.79	0.00	(287,647.79)
08 3130	HOMESTEAD EXEMPTION	0.00	0.00	0.09	0.00	(0.09)
08 3180	PRO-RATE MOTOR VEHICLE	0.00	3.65	313.99	0.00	(313.99)
	Subtotal: STATE RECEIPTS	0.00	3.65	314.08	0.00	(314.08)
	Fund Total:	0.00	12,438.89	287,961.87	0.00	(287,961.87)

Regular; Processing Month 11/2024; Accounts to Include Accounts with Activity; Fund Number 01, 02, 08, 56, 57, 58, 59

Fund: 56 Petty Cash Fund

Account Number	Description	Revised Budget	During Month	To Date	% of Budget	Budget Balance
56 1510	INTEREST ON INVESTMENTS	0.00	1.14	2.92	0.00	(2.92)
Subtotal:	LOCAL RECIEPTS	0.00	1.14	2.92	0.00	(2.92)
	Fund Total:	0.00	1.14	2.92	0.00	(2.92)

Revenue Summary Report

Processing Month: 11/2024

Regular; Processing Month 11/2024; Accounts to Include Accounts with Activity; Fund Number 01, 02, 08, 56, 57, 58, 59

Fund: 57 125 Plan

Account Number	Description	Revised Budget	During Month	To Date	% of Budget	Budget Balance
57 9000	NON-PROGRAM RECEIPTS	0.00	1,515.81	4,547.43	0.00	(4,547.43)
Subtotal:	NON-PROGRAM RECEIPTS	0.00	1,515.81	4,547.43	0.00	(4,547.43)
	Fund Total:	0.00	1,515.81	4,547.43	0.00	(4,547.43)

Regular; Processing Month 11/2024; Accounts to Include Accounts with Activity; Fund Number 01, 02, 08, 56, 57, 58, 59

Fund: 58 Employee Benefit Fund

Account Number	Description	Revised Budget	During Month	To Date	% of Budget	Budget Balance
58 1510	INTEREST ON INVESTMENTS	0.00	6.44	19.48	0.00	(19.48)
Subtotal:	LOCAL RECIEPTS	0.00	6.44	19.48	0.00	(19.48)
	Fund Total:	0.00	6.44	19.48	0.00	(19.48)

Revenue Summary Report

Processing Month: 11/2024

Regular; Processing Month 11/2024; Accounts to Include Accounts with Activity; Fund Number 01, 02, 08, 56, 57, 58, 59

Fund: 59 Payroll Account

Account Number	Description	Revised Budget	During Month	To Date	% of Budget	Budget Balance
59 9000	NON-PROGRAM RECEIPTS	0.00	191,423.67	584,656.58	0.00	(584,656.58)
Subtotal:	NON-PROGRAM RECEIPTS	0.00	191,423.67	584,656.58	0.00	(584,656.58)
	Fund Total:	0.00	191,423.67	584,656.58	0.00	(584,656.58)

Revenue Summary Report

Processing Month: 11/2024

Regular; Processing Month 11/2024; Accounts to Include Accounts with Activity; Fund Number 01, 02, 08, 56, 57, 58, 59

	Revised Budget	During Month	To Date	% of Budget	Budget Balance
Grand Total:	6,220,232.00	322,444.39	2,266,952.23	36.44	3,953,279.77

2024-2025

General Fund Expenditures:

Month	Bills/Expenses	Payroll	Monthly Total	YTD Expend.	% Spent
Sept.	$75,537.53	$395,752.30	$471,289.83	$471,289.83	6.90%
Oct.	$121,349.95	$355,845.56	$483,098.20	$954,388.03	13.44%
Nov.	$126,110.10	$362,570.85	$494,501.04	$1,448,889.07	21.21%
Dec.	$143,700.34	$348,810.22	$492,510.56	$1,941,399.63	28.42%
Jan.					0.00%
Feb.					0.00%
March					0.00%
April					0.00%
May					0.00%
June					0.00%
July					0.00%
Aug					0.00%
Aug/EOY					**0.00%**

	YTD Expend	YTD Revenue		Cash Balance
Activities				
Elem Act				
Empl Ben				
Depreciation				
Building				
Nutrition				

General Fund Budget	**$6,830,500.00**	**2024-25 Operating Budget**	
	$7,102,164.00	**2023-24 Operating Budget**	**(with grants)**
		Average Monthly Bills =	**$485,349.91**

Month	General Fund Historical Data: 23-24	22-23 Year	21-22 Year	20-21 Year	General Fund Revenue: Levy	Non-levy	Total	YTD Revenue
Sept.	$414,432.34/6.07%	$441,867.41/6.56%	$463,029.89/7.61%	$471,016.73/8.42%				
Oct.	$508,037.98/12.99%	$438,434.02/13.06%	$422,955.85/14.56%	$453,681.99/16.45%	$891,028.64	$102,471.94	$993,500.58	$993,500.58
Nov.	$517,627.51/21.08%	$490,025.44/20.33%	$403,089.56/21.18%	$1,358,632.27/24.04%	$226,470.63	$69,773.26	$296,243.89	$1,289,744.47
Dec.	$442,216.57/27.56%	$468,988.49/27.29%	$468,150.60/28.88%	$429,597.44/31.64%	$52,391.45	$73,446.11	$125,837.56	$1,415,582.03
Jan.	$445,603.40/34.08%	$491,946.58/34.59%	$433,141.60/35.99%	$408,741.23/38.88%	$3,352.07	$125,442.37	$128,794.44	$1,544,376.47
Feb.	$482,087.06/41.14%	$487,239.30/41.82%	$402,010.59/42.60%	$412,060.90/46.17%	$755,058.20	$236,574.59	$991,632.79	$2,536,009.26
March	$478,433.84/48.14%	$437,740.48/48.31%	$432,103.96/49.70%	$412,633.62/53.47%	$312,035.10	$367,190.80	$679,225.90	$3,215,235.16
April	$423,006.30/54.34%	$441,485.17/54.86%	$427,862.67/56.73%	$436,677.99/61.20%	$77,290.73	$243,139.53	$320,430.26	$3,535,665.42
May	$511,223.58/61.82%	$525,106.08/62.65%	$408,161.54/63.44%	$435,547.14/68.90%	$138,883.90	$169,176.83	$308,060.73	$3,843,726.15
June	$425,260.94/68.05%	$451,933.36/69.36%	$457,619.26/70.96%	$512,521.56/77.97%	$1,119,561.61	$405,704.92	$1,525,266.53	$5,368,992.68
July	$599,231.31/76.82%	$511,075.20/76.94%	$387,639.35/77.33%	$528,316.64/87.32%	$311,043.41	$173,402.46	$484,445.88	$5,877,230.26
Aug	$431,266.69/83.13%	$383,924.16/82.65%	$497,491.53/85.50%	$397,554.24/94.36%	$12,392.33	$33,108.20	$45,500.53	$5,922,730.79
Aug/EOY	**$298,503.85/87.50%**	**$453,148.28/89.36%**	**$289,771.10/90.27%**	**$216,687.81/98%**				

Other Funds:	Fund Name:	Balances: 24-25 Year	BF & DF Projects:	Fund Name:	Balances: 24-25
9/1/2024	Building	$2,421,662.54		Activities (hs+elm)	$118,937.53
	Depreciation	$471,374.65	Transferred $115,000.00-(Aug 26th)	Nutrition	$35,307.43
10/1/2024	Building	$2,602,707.55		Activities (hs+elm)	$55,257.24
	Depreciation	$464,811.44		Nutrition	$38,669.45
11/1/2024	Building	$2,665,322.57		Activities (hs+elm)	$217,489.83
	Depreciation	$464,910.41		Nutrition	$31,624.36
12/1/2024	Building	$2,677,761.46		Activities (hs+elm)	$211,797.82
	Depreciation	$465,002.76		Nutrition	$24,045.46
1/1/2025	Building			Activities (hs+elm)	
	Depreciation			Nutrition	
2/1/25	Building			Activities (hs+elm)	
	Depreciation			Nutrition	
3/1/2025	Building			Activities (hs+elm)	
	Depreciation			Nutrition	
4/1/2025	Building			Activities (hs+elm)	
	Depreciation			Nutrition	
5/1/2025	Building			Activities (hs+elm)	
	Depreciation			Nutrition	
6/1/2025	Building			Activities (hs+elm)	
	Depreciation			Nutrition	
7/1/2025	Building			Activities (hs+elm)	
	Depreciation			Nutrition	
8/1/2025	Building			**Activities (hs+elm)**	
	Depreciation			**Nutrition**	

Prior Years:	Balances:	Balances:	Balances:
Fund Name:	**23-24 Year**	**22-23 Year**	**21-22 Year**
Building	$2,126,001.00	$1,696,574.93	---
Depreciation	$473,167.00	$274,343.87	---
Building	$2,342,301.09	$1,750,560.81	$2,102,833.32
Depreciation	$425,614.02	$274,399.11	$221,610.68
Building	$2,140,472.34	$1,745,100.83	$1,453,177.72
Depreciation	$425,707.31	$274,455.49	$218,005.35
Building	$2,154,600.52	$1,738,498.33	$1,453,549.17
Depreciation	$425,794.78	$274,511.88	$159,464.61
Building	$2,155,772.64	$1,925,013.78	$1,619,320.31
Depreciation	$426,029.38	$240,574.95	$159,457.75
Building	$2,337,122.10	$2,064,614.20	$1,717,830.55
Depreciation	$384,713.64	$240,621.09	$159,463.87
Building	$2,451,242.21	$1,665,574.86	$1,054,945.50
Depreciation	$384,793.51	$222,821.09	$159,470.64
Building	$2,061,028.82	$1,769,350.83	$1,117,723.79
Depreciation	$384,869.94	$222,914.43	$159,476.98
Building	$2,097,984.45	$2,003,585.24	$1,420,348.51
Depreciation	$384,954.30	$203,175.47	$159,483.97
Building	$2,403,650.81	$2,126,191.80	$1,499,135.38
Depreciation	$385,036.04	$193,152.25	$99,655.93
Building	$2,480,675.93	$2,133.518.31	$1,498,492.89
Depreciation	$377,532.93	$182,948.53	$99,667.12
Building	$2,449,366.28	$2,128,411.06	$1,481,919.19
Depreciation	$373,854.28	$182,948.53	$274,295.12

1.4.3.5. Nutrition Fund Account Statements

Revenue Summary Report
Processing Month: 11/2024

Fund: 06 Lunch Fund

Account Number	Description	Revised Budget	During Month	To Date	% of Budget	Budget Balance
06 1611	DAILY SALES-SCHOOL LUNCH PROGRAM	0.00	8,848.88	27,562.58	0.00	(27,562.58)
06 1630	Revenue Special Functions	0.00	40.80	230.71	0.00	(230.71)
06 1920	CONTRIBUTIONS & DONATIONS	0.00	200.00	800.00	0.00	(800.00)
	Subtotal: LOCAL RECIEPTS	0.00	9,089.68	28,593.29	0.00	(28,593.29)
06 3150	STATE REIMBURSEMENT(OF NUTRITION PROG)	0.00	13,058.54	17,523.10	0.00	(17,523.10)
	Subtotal: STATE RECEIPTS	0.00	13,058.54	17,523.10	0.00	(17,523.10)
	Fund Total:	0.00	22,148.22	46,116.39	0.00	(46,116.39)

Revenue Summary Report
Processing Month: 11/2024

	Revised Budget	During Month	To Date	% of Budget	Budget Balance
Grand Total:	0.00	22,148.22	46,116.39	0.00	(46,116.39)

Hot Lunch

$ 24,045.46

Vendor Name	Invoice Number	Description	Amount
Checking Account ID 06	Fund Number 06	Lunch Fund	
ACTIVITY FUND	20241118	Sam's club card repayment	257.04
Total ACTIVITY FUND			257.04
CASH-WA DISTRIBUTING	14371330	Polk Food	78.95
CASH-WA DISTRIBUTING	14372209	Polk Food	784.47
CASH-WA DISTRIBUTING	14380536	Polk Food	679.01
CASH-WA DISTRIBUTING	14388358	Polk Food	815.31
CASH-WA DISTRIBUTING	14392014	Polk Food	152.38
CASH-WA DISTRIBUTING	14396564	Polk Food	719.69
CASH-WA DISTRIBUTING	14405461	Polk Food	574.08
CASH-WA DISTRIBUTING	14412678	Polk Food	90.00
CASH-WA DISTRIBUTING	14412740	Polk Food	475.68
CASH-WA DISTRIBUTING	14420904	Polk Food	673.67
CASH-WA DISTRIBUTING	CM3723416	Polk Food	(64.42)
Total CASH-WA DISTRIBUTING			4,978.82
CASH-WA DISTRIBUTING	14372210	Non Food Polk	183.95
CASH-WA DISTRIBUTING	14405462	Non Food Polk	146.15
CASH-WA DISTRIBUTING	14412741	Non Food Polk	75.80
CASH-WA DISTRIBUTING	14420901	Non Food Polk	105.55
CASH-WA DISTRIBUTING	CM3726429	Non Food Polk	(79.50)
Total CASH-WA DISTRIBUTING			431.95
CASH-WA DISTRIBUTING	14375603	Clark Non Food	59.59
CASH-WA DISTRIBUTING	14384060	Clark Non Food	29.85
CASH-WA DISTRIBUTING	14392016	Clark Non Food	124.95
CASH-WA DISTRIBUTING	14416637	Clark Non Food	202.60
Total CASH-WA DISTRIBUTING			416.99
CASH-WA DISTRUBUTING	14371329	Clarks Food	78.95
CASH-WA DISTRUBUTING	14375604	Clarks Food	588.52
CASH-WA DISTRUBUTING	14384059	Clarks Food	765.24
CASH-WA DISTRUBUTING	14392015	Clarks Food	640.66
CASH-WA DISTRUBUTING	14400006	Clarks Food	809.17
CASH-WA DISTRUBUTING	14408569	Clarks Food	477.76
CASH-WA DISTRUBUTING	14412679	Clarks Food	90.00
CASH-WA DISTRUBUTING	14416636	Clarks Food	469.17
CASH-WA DISTRUBUTING	CM3730563	Clarks Food	(90.00)
Total CASH-WA DISTRUBUTING			3,829.47
HILAND DAIRY FOODS	20241105	Milk Both sites	1,902.66
Total HILAND DAIRY FOODS			1,902.66
HPC GENERAL FUND	20241101	Sept Kitchen Wages	13,470.13
Total HPC GENERAL FUND			13,470.13
MCLEAN BEEF	20241126	Beef LSF funds	976.48
Total MCLEAN BEEF			976.48
OSANTOWSKI, SHELBY	20241101	Fresh Eggs	105.00
Total OSANTOWSKI, SHELBY			105.00
POLK SERVICE & REPAIR	43639	propane for grill	13.37

Vendor Name	Invoice Number	Description	Amount
Total POLK SERVICE & REPAIR			13.37
US FOODS-GRAND ISLAND	3236653	Clarks Food	1,118.42
US FOODS-GRAND ISLAND	3236654	Food Both sites	55.72
US FOODS-GRAND ISLAND	3338536	Polk Food	1,005.75
US FOODS-GRAND ISLAND	3793497	Clarks food and supplies	1,108.74
US FOODS-GRAND ISLAND	3891585	Polk food	1,033.06
Total US FOODS-GRAND ISLAND			4,321.69
Fund Number 06			30,703.60
Checking Account ID 06			30,703.60

1.5. Community Input

2. Discussion/Action Items

2.1. Administrator Reports

2.2. Elementary Principal Report

High Plains Community Board of Education Meeting
Mrs. Helgoth's Elementary Report
Date: 12/09/24

The mission of the High Plains Community Schools is to provide an educational environment which develops citizens who are lifelong learners and can contribute to a global society.
Every Student! Every Day! Every Way!

1. **Working at Academic Success**
    a. Students in grades 3-6th are currently participating in the NSCAS winter growth assessment as a mid-year benchmark to provide growth data for math and reading. They also participate in MAP Science assessments. Students in grades K-2 are currently participating in MAP winter growth assessments as a mid-year benchmark to provide growth data for math and reading. All students also participate in FastBridge reading and math benchmarks.
    b. Preschool students' growth is also assessed through GOLD standards which are submitted twice yearly. These standards and assessment of students' growth in these standards are used to have conversations for Kindergarten readiness and possible needed supports entering the primary grades.
    c. We will also celebrate the student growth shown on winter assessments at our Winter Academic Celebration Assembly in January.

2. **Academic Success**
    a. NEP classifications for the 2023-2024 school year have recently been released. The Nebraska Education Profile (NEP) provides information and data about Nebraska public schools and student performance. The NEP highlights the performance of students by district and school building.
    b. High Plains Elementary is classified as Excellent (4) which is the highest rating on the NEP. This is the third year in a row being classified as Excellent. As a district our classification is Great (3). This is also the third year in a row of this rating for our district.

3. **Connections and success beyond the classroom**
    a. Holiday of Giving! Elementary students collected over 800 items for our district food drive that took place before Thanksgiving.We are currently collecting items for our hygiene product drive.Classes are enjoying competing to collect the most and best of all giving to others.
    b. We will also be creating holiday cards for the Midwest Assisted Living and Long Term care residents.
    c. We've created our Thankful Turkey in our color teams just before the holiday. It's an awesome display of the gratitude our PK -6th students

have shown for all their caring families and great opportunities in Storm Nation.

d. Senior Seminar students visited the elementary and went to all three lunch recess times with students and stayed to have lunch with the 4-6th graders. We enjoyed their visit tremendously and have invited them to return for some holiday fun. The connection between our oldest and youngest Storm students shows the pride they all take in being a part of our school community.
e. HPC 3rd graders participated in the NDOT's Name a Snow Plow Contest this year. The name Collin Brockevelt submitted was one of only 17 names chosen from over 1,300 names submitted from across the state. We surprised Collin and all the students with an assembly to announce the winner and the very snow plow he named was onsite. Students were able to see and sit in the snow plow and every HPC student signed their name on the blade. We'll be able to Snowcus Pocus in action this winter through it's dash cam on the 511 app. Collin is our second student to have named a snowplow since the contest began 4 years ago.
f. 6th grade students presented at the NASB conference in Omaha on November 22nd. Students had an early start to travel to the CHI center in Omaha and present to Board of Education members from around the state. This year they highlighted their coding robots and the heat press with mug designs. All four students did a fantastic job of sharing their learning opportunities with board members. I received a number of compliments about how well our group interacted and respectfully shared their experiences here at HPC.

4. PreKindergarten Update

a. We held our public PK Advisory Committee meeting on November 14th.
b. At this meeting our PK Advisory team discusses current PK data, successes, and problem solves challenges.
c. We recently had our ECERS observation conducted by the Nebraska Department of Education department of Early Childhood. This is a full afternoon observation of all facets of our PK program.
d. The Early Childhood Environment Rating Scale is a comprehensive assessment tool used to measure the quality of early childhood learning environments including both materials and interactions.
The rubric is 18 pages with 35 categories for scoring standards we are required to meet.
e. HPC's PK program was scored as a highly-quality program. A full scale point above the state average for PK programs.

5. **Upcoming Holiday Celebrations (Positive School Culture)**
    a. Poetry Cafe will be hosted by the 4th-6th grade students in December. Parents and grandparents are invited in to hear poetry written and presented by 4th and 5th grade students and the 6th grade will be the hosts of our event.
    b. The K-12th grade Winter Music Program is on December 13th. Students have been working diligently on their performances for the evening.
    c. Holiday dress up days and Christmas Around the World activities are also happening as we end the semester.

Snowcus Pocus- the snow plow newly named by our very own HPC student! All students were able to sign the blade of the plow!

6th grade students presenting at the NASB conference in Omaha.

Seniors eating with 4-6th grade students on a senior seminar visit to the elementary.

2.3. Junior High & High School Principal Report

- AQuESTT - NDE Education Profile has officially been released. The High School has improved from “Needs Support to Improve” to “Great”. Our Middle School was listed as “Good”. The way it works is that school districts are assessed over 6 categories. The items the state review is discipline, attendance, postsecondary/career readiness, graduation, state assessment scores, and educator effectiveness. This is a true testament to the hard work and dedication our staff has incorporated over the past year.
- MAP Testing - It's that time to take district assessments at the secondary level. MAP Testing for all 7th through 11th graders will occur on Monday, December 9th through Thursday, December 12th. Tests that will be assigned are Reading, Science, Math, and English. Our goal is to track and monitor students’ progress to ensure that HPC is providing the education to make them college and/or career ready after high school. We will run a modified schedule those days with testing at the start of the day. Students will receive an email about where to attend their testing sessions. All testing will occur on the West Campus of Polk. Any student that isn’t able to test on one of those days will be able to make up those sessions on Friday.
- EduClimber - HPC is integrating towards a new data analysis system. We are currently using Schoolzilla, but it is being transferred into one platform. This is a great resource the school utilizes to drive decision-making as evidence to support teaching and learning in the district.
- Community Partnerships - HPC is invested in ensuring that our communities and families and staff have a place to send their children for daycare. We are working collaboratively with the Clarks daycare to ensure that we have coverage while also providing them work-based learning opportunities. We have three individuals who are getting great experience.
- Elementary Visit - Especially being different cities, it is important to the secondary site to bring unity and support to our district. Our high schoolers have been told that our elementary students look up to them and their success. It is important to have a good image/representation of them by being that role model. Our seniors went down to Clarks on 11/25.
- FFA Blood Drive - Mr. Hofmann and the FFA program are always looking for opportunities to give back to our community. They hosted the Blood Drive on 11/19 at the Activities Entrance in Polk. The group was able to donate 21 units of blood.
- Mental Health Grant - The refund has been submitted to the NDE and we are hoping to receive the money back soon. Both rooms are completely set up and ready to go. Our student population appreciates the space and items that are incorporated in it. I have provided some photos for your viewing. I appreciate Mrs. Grigsby and Mrs. Welch’s efforts in giving our students a safe spot to address mental health. At the school board meeting in January, I would be happy to show people around.

2.4. AD Report

ACTIVITIES DIRECTOR'S REPORT
Dec, 2024

- **One Act:** 4th place finish at Districts; 5th place finish at CRC
  District Outstanding acting awards: Allie, Sammy, Madi and Peyton,
  Tech Crew: 2nd place finish at Districts (Bowdy, Colin, Makayo)

- **Volleyball:**
  CRC 1st Team: Courtney
  CRC HM: Emma and Rylee A.

- **Football:**
  All District –
  1st Team: Gage, Caleb, Hudson, Haden, Carter
  2nd Team: Ayden, Camden, Kaden, Raul, Brody
  H.M.: Maddix, Carson

- **Congratulations** to Stucco, Staff and Students for a very successful food drive. They are all teaming up once again to raise Hygiene products.

- **Dec 13:** K-12 Holiday Concert Is going to be performed at Clarks. The start time will be at 6:30

- **Dec 18th:** FFA will be taking 42 7-12th grade FFA members to the District LDE Contest in Aurora

- **Dec 22-26:** 5 Day Moratorium

- **Dec 27 – 28**: G/B Holiday Tournament at Brainard. Received information today. We will play Walthill the first day at 1:00 and 2:30.

- **Jan 9th, 10th and 11th**: Is our big wrestling tournament in Columbus at the Field House. We are going to be needing volunteer to help run this at the bigger venue.

Greg Wood
High Plains Community
Activities Director

2.5. Superintendent Report

High Plains Community School Superintendent Board of Education Report

November 11tth Superintendent Report

HPC Schools-Mr. Brown

The mission of the High Plains Community Schools is to provide an educational environment which develops citizens who are lifelong learners and can contribute to a global society.

Every Student! Every Day! Every Way!

1. Rule 10 Safety Audit was performed on November 15th by Norm Yoder. Everything was fine with no major issues to report. He noted positives on the emergency protocols that were in place and communication of the plans that the principals, committees, and staff have done with training and practices to ensure student safety. Upgrades were done on concrete concerns from a year ago at Clarks, along with handrails. Fire extinguishers were being checked monthly and kitchen hoods were as well. Areas to address, were storage areas at both sites need to be organized and cleaned. Throw away or discard materials not being used. Storing items on shelving that requires a step stool or ladder to get down needs to be moved to a safer location if available. Playground sand at Polk needs to be cleaned and raked so it is not as hard for students. Label electrical panels in the FCS room in case of fires so electricity can be cut. Make sure chemicals in the science rooms are locked at all times.
2. ESU 7 Boardmanship Event 5:00-8:30 on January 29th. More information to come on that event. I will get you registered if you would like to attend. The NRCSA spring conference will be held from March 19 through the 21st in Kearney at the Younes Center. Let me know if you are interested in attending that.
3. HPC Hall of Fame meetings, I have been working with the HPC Hall of Fame committee in November and December. We have had a couple of meetings here at Polk. We have selected inductees for the Hall of Fame. We will induct the inductees on February 7th in between the girls and boys basketball games vs East Butler.
4. During the Holiday break, the school will be observing the NSAA moratorium from December 22-26th. There will be no activities or practices at that time. The schools will be closed at that time as well. The offices will be closed and noone will be working at that time. Normal office hours will resume on December 27th and the hours will be 7:30-3:30. We will be closed on New Years Day.
5. The end of the semester is fast approaching. I have always pushed students and staff to give with canned food drives and hygiene drives. Along with that MAP testing. This year we have done that with the help of the HPC student council and staff members. Mrs. Hofman, Mrs. Grigsby, Mrs. Helgoth, Mr. Fisher, and I got together to set goals for all the students to meet in all three of these areas. There are rewards along the way of food, snacks, and other things. The ultimate goal is to have the early out on December 20th, turn into a no school day for students and staff to have a work day (contract day). So far it is going well. The food drive was a huge success with over 2,000 items collected combined at both schools. The MAP and NSCAS testing must achieve atleast 2% growth by class or by each student. The hygiene drive is underway and they must also collect three items. The hygiene items will stay at HPC for our students to use or take home. This way of competitive learning and giving back to the community has been great to see!!

6. I want to recognize and thank the following three board members for their service and dedication to the HPC school district, students, and staff. Thank you for all you have done for you time as school board members at HPC. You will be missed. Erin Meyer-four years of service,, Terry Carlstrom-eight years of service, and Kraig Urkoski-four years of service, thanks for all you have done for HPC. You will be missed.

Board Meeting Guidance on the Agenda for December 9th, 2024

1.0 Open the meeting
1.1 Pubic Meeting Announcement
1.3 Open Meetings Act Recognition-Posted on the wall
1.4 Consent Agenda-Take action on the following
Appendix A-Previous Minutes, October 14th
Appendix B- October Bills
Appendix C-Financial statements for the General Fund, Nutrition Fund, Activity Fund, Depreciation Fund, and Special Building Fund Accounts.
1.5 Student Council Presentation
1.6 Community Input

II. Discussion Items

2.1 Admin. Reports
2.2 Mrs. Helgoth-Elementary
2.3 Mr. Fisher-JH/HS
2.4 Mr. Wood-AD Report
2.5 Mr. Brown-Supt. Report

III. Discussion/Action Items

2.6 Discussion on COOP considerations with Hampton and Osceola

2.7 Discuss and review superintendent Brown's evaluation. However you guys want to do that in open or closed session.

2.8 Discuss and review superintendent Brown's contract. No action needed, just that the contract renews one year from the latest date that is on the contract June 30, 2026. The new updated date will be to June 30th, 2027.

2.9 Please approve the bid from Apple Education for 20 MacBook computers. This bid is for $17,580.00. We are out of computers and I am starting a computer buy back program for juniors and seniors next school year. It will be a new computer.

2.10 Please approve the certificated contract for Mr. Tanner Wood for the 2nd semester of the 2024-25 school year at HPC for teaching social science.

2.11 Please approve the audit from the 2023-24 fiscal year at HPC. All the documentation from Abby Janzig at Forward CPA inc. are attached. We will discuss them at the meeting. Please review them.

2.12 Please approve the bid Central Nebraska Refrigeration for a stand up freezer for the Polk kitchen. This bid is the highest but that is due to them removing the old freezer. The freezer must be cut out of the room. It is too big to go out of the door. It also has the best warranty at 7 years.

2.13 Please approve the mid-year policy updates from KSB. These just came out as the calendar gets ready to change to 2025. We need to update policy #2008 and #3004.1 with the recommended KSB changes (see the memo and redlines). As for policy #3060 for Firearms & Weapons-Non-Students, we are a Class I and Class II school. We have a district population of less than 5,000 residents. We can allow “authorized security personne” to carry firearms and ammunition on school grounds. It could cost our insurnace. The school attorneys do not recommend or support schools of our size do this change or update. This is due to school safety and who all could be allowed to conceal and carry at school.

3.0 Ex. Session (If needed, my philosophy is to try and avoid Ex. Session if possible).

4.0 Adjourn the meeting and set the next regular meeting for January 13th at 6:30 in Polk. (We do have JH GBB & BBB @ 4:00 in Clarks vs SRC).

2.6. Discussion on COOP Considerations

2.7. Review and discuss Superintendent Brown's evaluation.

2.8. Review and discuss Superintendent Brown's Contract Renewal

SUPERINTENDENT'S CONTRACT OF EMPLOYMENT
HIGH PLAINS COMMUNITY SCHOOLS

THIS CONTRACT is made by and between the **Board of Education of High Plains Community Schools,** legally known as **Polk County School District 72-0075**, and referred to as "the Board" and "the District" respectively, and **Jason Brown**, referred to herein as "the Superintendent". In accordance with its action taken and recorded in the minutes of a duly advertised board meeting, the Board agrees to employ the Superintendent, and the Superintendent agrees to accept such employment, subject to the terms and conditions set forth herein.

Section 1. Term of Contract. The Superintendent shall be employed for a period of 2 years beginning on **July 1, 2024**, and expiring on **June 30, 2026.** References to "contract year" shall mean the period from July 1st through June 30th. The Superintendent's working days shall consist of all days Monday through Friday, but generally not Saturdays and Sundays and any holidays or leave days listed in this contract. However, the Superintendent will work all days necessary to complete the Superintendent's duties, even if those are weekend days or holidays. The Superintendent shall keep complete and accurate records of working days and shall provide the Board of Education with a report of the Superintendent's working days at least quarterly.

Section 2. Renewal of Contract. If a Board representative does not inform the Superintendent in writing on or before **the seventh day after the regular December board meeting** of the Board's intention to consider the nonrenewal or amendment of this contract, the contract will automatically renew for a period of **one year** from and after the expiration date provided in Section 1 of this contract. The Superintendent shall remind the Board in writing of this provision no later than **its regular November meeting** of each year of this contract and shall make the renewal of the Superintendent's employment contract an agenda item for the regular **December** board meeting during each year of this contract. At the time of each contract renewal and/or amendment, the Superintendent shall be responsible for taking all necessary steps to ensure that the District has complied with the Superintendent Pay Transparency Act.

Section 3. Salary. The Superintendent's salary for the contract year shall be **$153,000** which shall be paid in 12 equal monthly installments consistent with the District's regular payroll practices. The Board shall not reduce the Superintendent's salary during the term of the contract, but may increase it and/or the benefits during the term of this contract, as an amendment to the contract, without the amendment constituting a new contract, requiring a hearing, or extending the term of this contract.

Section 4. Deductions. This contract shall conform to the statutes and regulations governing deductions from compensation and shall be subject to the School Employees Retirement Act. The Superintendent authorizes the District to deduct or withhold from each and every period of pay any amounts necessary to offset any damages caused by the Superintendent or the value of property or money entrusted to the Superintendent or owed by the Superintendent to the District during the course of or as a result of the Superintendent's employment, if such property or money have not properly been returned to the District. The District shall withhold other deductions as the Superintendent and Board may agree.

Section 5. Professional Status. The Superintendent affirms that the Superintendent is not under contract with any other board of education covering any part or all of the term provided in this contract. Throughout the contract term, the Superintendent will hold a valid and appropriate certificate to act as a superintendent of schools in the State of Nebraska which the Superintendent will register and maintain on file in the District's central administrative office. This contract shall not be valid and the Board will not compensate the Superintendent for any service performed prior to the date that the Superintendent registers the certificate. The Superintendent represents that: (1) all information provided in connection with the Superintendent's application for employment with the District was true and accurate at the time of application, and if there is or has been a material change in such information, the Superintendent will advise the Board immediately; (2) the Superintendent has never been convicted of or plead no contest to a felony as defined in Title 92, Chapter 21, Sections 003.11 and 003.13 of the Nebraska Administrative Code ("Rule 21"), or any offense involving moral turpitude, abuse, neglect, or sexual misconduct, as defined in Title 92, Chapter 21, Sections 003.12 and 003.13 of the Nebraska Administrative Code; and (3) the Superintendent has not had any professional licenses or certificates suspended or revoked.

Section 6. Superintendent's Duties. The Superintendent's duties shall be as prescribed by statute and by Board policies, rules, regulations and directives. The Superintendent agrees to devote the Superintendent's time, skill, labor and attention to all required duties throughout the contract term. The Superintendent shall be subject to the direction and control of the Board at all times and shall perform such administrative duties as the Board assigns. By agreement with the Board, the Superintendent may undertake consultative work, speaking engagements, writing, lecturing, or other professional duties and obligations as long as they do not interfere with carrying out the Superintendent's duties and obligations to the District.

Section 7. Board-Superintendent Relationship. The Board shall be primarily responsible for formulating and adopting policy. The Superintendent shall be the chief administrative officer for the District and shall be responsible for implementing Board policy. The Superintendent shall organize

the administrative and supervisory staff, and select, place, and transfer personnel with the concurrence of the Board. The Superintendent is responsible for administering the instruction of students and the business affairs of the District. The Board members agree, individually and collectively, to promptly refer all criticisms, complaints, and suggestions called to their attention to the Superintendent for action, study and/or recommendation, as appropriate.

Section 8. Cancellation or Mid-Term Amendment. The Board may cancel or amend this contract during its term for any of the following reasons: (a) the cancellation, termination, revocation, or suspension of the Superintendent's certificate (Nebraska Administrative and Supervisory Certificate, or the Nebraska Professional Administrative and Supervisory Certificate) by the State Board of Education: (b) any of the reasons set forth in this contract; (c) the breach of any of the material provisions of this contract; (d) incompetence: (e) neglect of duty; (f) unprofessional conduct; (g) insubordination; (h) conduct involving moral turpitude; (i) physical or mental incapacity: (j) immorality; (k) conviction of a felony; (l) any conduct that substantially interferes with the Superintendent's continued performance of the Superintendent's duties; (m) any arrest, criminal charge, or criminal conviction of Superintendent or the failure to report the same; (n) any filing against the Superintendent under NEB. REV. STAT. § 43-247 or any other provision of the Nebraska Juvenile Code for child abuse and/or neglect or the failure to report the same; (o) knowingly falsifying District records or documents; (p) misrepresentation of fact to the District and its personnel in the conduct of its official business; (q) the use or possession of illegal drugs or controlled substances except as prescribed by a physician; or (r) being under the influence of illegal drugs, controlled substances, or alcohol while on school grounds, at school events, or in a vehicle owned, leased or contracted by the District except as prescribed by a physician. The procedures for cancellation or amendment shall be in accordance with state statutes. The parties agree that the Superintendent's failure to comply with the obligations in the Renewal of Contract or Evaluation provisions of this contract shall constitute a material breach of this contract.

Section 9. Disability. If the Superintendent is unable to perform any of the Superintendent's duties by reason of illness, accident or other disability beyond the Superintendent's control, and the disability continues for a period exceeding the Superintendent's sick leave allowance, or if the disability is permanent, irreparable, or of such a nature as to make performance of the Superintendent's duties impossible, the Board may initiate action to cancel this contract, whereupon the respective rights, duties and obligations of the parties hereunder shall terminate, with the exception of any benefits to be paid to the Superintendent under any insurance coverage furnished by the District.

Section 10. Transportation. The Board shall provide the Superintendent with transportation or reimburse the Superintendent for mileage required in the performance of official duties at the rate approved by the Board.

Section 11. Fringe Benefits. The Board shall provide the Superintendent with the following fringe benefits:

a. **Health Insurance.** Family health insurance that is available to certificated staff through the District's health insurance carrier.

b. **Dental Insurance.** Family dental insurance that is available to certificated staff through the District's health insurance carrier.

c. **Sick Leave.** The Superintendent shall be entitled to **10 days** of sick leave per year which may accumulate to a total of **50** days. Sick leave may only be used for personal illness or as otherwise provided in District policy. If the Superintendent qualifies for disability pay under the long-term disability policy, the Superintendent shall be required to take the disability pay instead of sick leave pay. The Superintendent shall keep complete and accurate records of sick days accrued and used and shall provide the Board with a report of accumulated sick days at least quarterly and upon request. The Superintendent shall not be compensated for unused days of sick leave upon the ending of employment with the District.

d. **Disability Insurance.** Long-term disability that is available to certificated staff through the District's insurance carrier.

e. **Vacation.** The Superintendent shall have **Twenty-two (22)** vacation days for the initial contract year which the Superintendent may use at times the Superintendent chooses so long as the absence does not interfere with the proper performance of the Superintendent's duties. Any extended vacation period while school is in session will require advance approval by the Board, and the parties will cooperate in arranging vacation time so as to cause the least inconvenience to the normal operation of the District. After the initial contract year, the Board shall give the Superintendent the number of vacation days necessary to restore the total to **Twenty-two (22) days**. For example, if the Superintendent uses 12 days of vacation one year,

the Board will provide the Superintendent with 12 days the following year to bring the total vacation days back to 22. The Superintendent shall develop a system for recording use of vacation days and shall keep such records current and on file in the District's central office. The Superintendent shall keep complete and accurate records of all vacation days and shall provide the Board of Education with a report of accumulated vacation days at least quarterly and upon request. The Board may require the Superintendent to use vacation days and shall compensate the Superintendent for unused vacation days upon the conclusion of employment as determined by the Superintendent's daily rate of pay based on a presumption of **237 working days**.

f. **Professional Development.** The Superintendent is expected to continue and seek professional development and to participate in relevant learning experiences. With the approval of the Board, the Superintendent may attend appropriate professional meetings at the local, state, regional and national level; and the Board will pay for valid expenses of attendance. If the Superintendent attends a national convention and does not return following the initial year of employment as Superintendent, the Superintendent agrees to repay the District in full for national convention expenses paid by the District.

g. **Professional Dues.** The District will pay the annual dues for the Superintendent's membership in the Nebraska Council of School Administrators and may pay dues to other professional organizations suitable for the Superintendent's position upon the Superintendent's request.

h. **Bereavement Leave.** The Superintendent shall be permitted bereavement leave as provided in District policy. In the event that the District does not have a bereavement leave policy, the Superintendent will be allowed up to **2 days** of paid bereavement leave per year.

i. **Holidays.** The Superintendent shall receive the following holidays off without loss of pay or having to take a paid leave day: July 4th, Labor Day, Thanksgiving, Christmas Day, New Years Day, and Memorial Day.

j. **Expense Reimbursement.** The Board shall pay or reimburse the Superintendent for expenses that are actually, necessarily, and reasonably incurred in attending educational

seminars, conventions, and workshops; conferences; training programs; official school functions, hearings or meetings, provided that such payment or expense is authorized by Board policy and the Local Government Miscellaneous Expenditures Act (NEB. REV. STAT. § 13-2201 *et seq.*) or some other provision of law.

Section 12. Residence/Domicile in District and Moving Expenses. The Board of Education encourages the HPC Superintendent to live within District boundaries, if adequate and suitable housing is available. The Board shall reimburse the Superintendent for the actual, reasonable, and necessary costs of moving the Superintendent's domicile residence within the boundaries of the District in an amount not to exceed the total sum of **$3,500.00,** with the sum reimbursement to be made upon presentation to the Board of receipts and itemization for such costs.

Section 13. No Penalty for Release or Resignation. There shall not be a penalty for the release or resignation of the Superintendent from this contract; provided no resignation shall become effective until the expiration of the contract unless it is accepted by the Board, and the Board shall fix the date at which the resignation shall take effect.

Section 14. Compensation Upon Termination and Credit for Accrued Vacation. Upon lawful termination of this contract for any reason, the compensation to be paid hereunder shall be an amount which bears the same ratio to the annual salary specified as the number of months or fraction thereof to the date of such termination bears to the 12 months in the annual salary period in which termination occurs. The Superintendent shall refund any portion of the salary paid but not earned prior to the date of termination of this contract.

Section 15. Evaluation. The Board shall evaluate the Superintendent twice during the Superintendent's first year of employment and at least once.

each year thereafter. The first evaluation during the first year of employment and the yearly evaluations after the first year of employment shall occur no later than the **regular December meeting**. The Superintendent shall: remind the Board members in writing of this provision no later than its **regular November meeting**; make the Superintendent evaluation an agenda item for the regular **December** Board meeting during each year of this contract; and provide the Board members with the written evaluation instrument that is on file with the Nebraska Department of Education.

Section 16. Legal Actions. The Board will support the Superintendent if there is a legal dispute caused by carrying out the Superintendent's duties properly. If a legal action, including a professional practice complaint, is

threatened or filed against the Superintendent as a result of the Superintendent's performance of duties or position as the Superintendent of the District, the Board will provide the Superintendent with a legal defense to the maximum extent permitted by law so long as the Superintendent acted in good faith and in a manner which the Superintendent reasonably believed to be in or not opposed to the best interests of the District and, with respect to any criminal action or proceeding, had no reasonable cause to believe that the Superintendent's conduct was unlawful.

Section 17. Physical or Mental Examination. The Superintendent agrees that, at the request of the Board, the Superintendent will have a comprehensive physical and\or mental examination performed by one or more licensed physicians or psychologists of the Board's choosing during the term of this contract. In deference to the requirements of state and federal law, the physician's report to the Board must address whether the Superintendent is able to perform the "essential functions" of the position.

Section 18. Disciplinary Action. The parties agree that the Board president may place the Superintendent on paid leave by delivering written notice of the same when the Board president determines it is in the best interests of the District to do so. The paid leave shall continue unless and until a majority of the Board determines otherwise at a duly convened meeting. The Board may suspend the Superintendent without pay for a period not to exceed thirty (30) working days. Prior to suspending the Superintendent without pay, the Board president or secretary shall deliver a written notice to the Superintendent advising the Superintendent of the alleged reasons for the proposed action and provide the opportunity to present the Superintendent's version of the facts. Within seven calendar days after receipt of such notice, the Superintendent may make a written request to the secretary of the school board for a due process hearing under section 79-832. If such a request is not delivered within such time, the action of the Board shall become final.

Section 19. Governing Laws. The parties shall be governed by all applicable state and federal laws, rules, and regulations in performance of their respective duties and obligations under this contact.

Section 20. Amendments to be in Writing. This contract may be modified or amended only by a writing duly authorized and executed by the Superintendent and the Board.

Section 21. Severability. If any portion of this contract is declared invalid or unenforceable by a court of competent jurisdiction, such declaration shall not affect the validity or enforcement of the remaining provisions of this contract.

IN WITNESS WHEREOF, the parties have executed this contract on the

dates indicated below.

Executed by the Board this 12th **day of** February, **20**24.

Shane Van Pelt

President, Board of Education

Erin Meyer

Secretary, Board of Education

Executed by the Superintendent this 12th **day of** February, **20**24.

Superintendent

2.9. Review, discuss, and take all necessary action on a quote for Macbooks.
A motion to approve a quote from Apple Education in the amount of $17,580.00 for 20 MacBooks Passed with a motion by Erin Meyer and a second by Terry Carlstrom.
Terry Carlstrom: Yea, Erin Meyer: Yea, Megan Pike: Yea, Nathan Spurling: Yea, Kraig Urkoski: Yea, Shane Van Pelt: Yea

Apple Inc. Education Price Quote

Customer:
Dylan Southard
HIGH PLAINS COMMUNITY SCHOOLS
Phone: 1402-564-5753
Email: dsouthard@esu7.org

Apple Inc:
Stephen Martin
Phone: (512) 701-6967
Email: stephen_martin@apple.com

Apple Quote:
2213158925

Quote Date:
November 08, 2024

Quote Valid Until:
December 08, 2024

Quote Comments:

Item #	Details	Qty	Unit List Price	Extended List Price
1	**13-inch MacBook Air: Apple M2 chip with 8-core CPU and 8-core GPU, 16GB, 256GB - Space Gray (Packaged in a 5-pack)** Part Number: MC7Y4LL/A **Configuration:** 065-CCJT : Apple M2 chip with 8-core CPU, 8-core GPU, 16-core Neural Engine 065-CCJX : 16GB unified memory 065-CCJY : 256GB SSD storage 065-CD7F : 30W USB-C Power Adapter 065-CCLY : 1080p FaceTime HD camera 065-CCM0 : Two Thunderbolt / USB 4 ports 065-CCM1 : MagSafe 3 charging port 065-CCM2 : 13.6-inch Liquid Retina display with True Tone 065-CD5W : None 065-CD09 : Backlit Magic Keyboard with Touch ID - US English 065-CD0T : Accessory Kit	20	$879.00	$17,580.00

Education List Price Total	**$17,580.00**
Additional Tax	$0.00
Estimated Tax	$0.00
Total Tax	$0.00
Extended Total Price*	**$17,580.00**

**In most cases Extended Total Price does not include Sales Tax*
**If applicable, eWaste/Recycling Fees are included. Standard shipping is complimentary*

Copyright © 2022 Apple Inc. All rights reserved.

Disclosure

This document has been created for you as Apple Quote ID **2213158925**.

Your institution's Authorized Purchaser may submit an order online at https://ecommerce.apple.com. Go to the Quote area of your Apple Online Store, click on it and convert to an order.

- If you’re the authorized purchaser and need assistance in registering for access to the Apple Online Store, please contact your Apple Sales Representative.

This is a quote for the sale of products or services. Your use of this quote is subject to the following provisions which can change on subsequent quotes:

A. Any order that you place in response to this Quote will be governed by the purchase agreement between Apple Inc. ("Apple") and you or another entity under which you’re authorized to purchase under, in effect at the time you place the order.

   - If you do not have a purchase agreement in effect with Apple, please contact csteam.edu@apple.com.

B. All sales are final. Please review Return Policy below if you have any questions. If you use your institution's Purchase Order form to place an order in response to this Quote, Apple rejects any Terms set out on the Purchase Order that are inconsistent with or in addition to the Terms of the governing purchase agreement between the parties.

C. Unless this Quote specifies otherwise, it remains in effect until the Quote Valid Until Date set forth above. Apple reserves the right to withdraw this Quote before an order is placed, modify, or cancel any provision of this Quote, or cancel any orders placed.

Copyright © 2022 Apple Inc. All rights reserved.

2.10. Review, discuss, and take all necessary action on a certificated contract for Mr. Tanner Wood for 2nd semester of the 2024-2025 school year.
approve teaching contract for Tanner Wood for second semester. Passed with a motion by Terry Carlstrom and a second by Nathan Spurling.
Terry Carlstrom: Yea, Erin Meyer: Yea, Megan Pike: Yea, Nathan Spurling: Yea, Kraig Urkoski: Yea, Shane Van Pelt: Yea

TEACHER'S CONTRACT

THIS CONTRACT is made by and between the Board of Education of **Polk** County School District No. **72-0075**, commonly known as **High Plains Community Schools**, referred to herein as the "Board" and "District" respectively, and **Tanner Wood**, a legally qualified teacher, referred to herein as the "Teacher".

WITNESSETH: The Board agrees to employ Teacher above named in the schools of the District for a school year, which shall begin on or about **January 6th**, **2025** and conclude on or about **May 20, 2025** and shall consist of ninety-three (93) days of service including approximately one hundred eighty (87) teaching days. **Teacher accepts such employment at a salary based upon placement on step 4 column B of the salary schedule. (BA, B-1) Index 1.0 = $40,170.00 **Starting date will be for the second semester of the 2024-25 school year. This contract is for one semester of work in the 2024-25 school year. Pay will be a per diem rate of $217.14 per day for 93 days. The total will be $20,194.02 for the second semester. Benefits will be as follows, single insurance will be covered in the contract, four sick days, two bereavement days, and two personal days will be allotted for this semester.****

FIRST: Teacher's salary shall be payable in **8** equal installments. The first installment shall be payable on the **15th day of January 2025**, and the remaining installments shall be payable on the 15th day of each month thereafter.

SECOND: Teacher will abide by the District's and Administration's policies, rules, regulations and directives and all state and federal statutes, rules, and regulations. Teacher's duties are subject to assignment by the Administration. Teacher agrees to devote full time during days of school to his position in all respects and to perform the assigned duties diligently and faithfully to the best of his professional ability.

THIRD: In addition to the teaching duties set forth herein, Teacher may be assigned such "extra duty" assignments which shall be for such compensation as may be agreed upon by the District and Teacher or by Teacher's duly authorized bargaining agent.

FOURTH: A majority of the Board members may cancel, amend, or terminate this contract during its term for any of the following reasons:

(a) cancellation, termination, revocation or suspension of Teacher's certificate by the State Board of Education; (b) a breach of any material provision of this contract; (c) any reason set forth in this contract; (d) incompetence; (e) neglect of duty; (f) unprofessional conduct; (g) insubordination; (h) physical or mental incapacity; (i) immorality; and (j) any conduct that interferes substantially with the teacher's continued performance of duties. Cancellation or amendment under this contract shall be governed by applicable provisions of Nebraska statute.

FIFTH: Upon termination of this contract for just cause, or upon Teacher's release from this contract, the compensation paid or to be paid hereunder shall be an amount that bears the same ratio to the yearly salary herein specified as the number of days of service to the date of such termination bears to the number of days of service in the contract year. Teacher shall refund any

unearned fractional portion of an installment paid but not earned prior to termination of the contract.

SIXTH: Upon termination of this contract, Teacher shall immediately return all District property to the District.

SEVENTH: There shall be no penalty for release or resignation by the Teacher from this contract, provided no resignation shall become effective until the close of the school year unless it is accepted by the Board, which shall fix the time that the resignation is to take effect.

EIGHTH: This contract shall conform to the regulations governing deductions from the above-stated compensation with reference to withholding tax, social security and Teachers retirement. Teacher shall be responsible to pay for damage to District property caused by the Teacher's reckless or intentional actions.

NINTH: Teacher affirms that he is not under contract with another school board or board of education within this state covering a part or all of the same time of performance as is contemplated by this agreement. Teacher affirms that he holds or will hold a valid Nebraska Teaching Certificate at the beginning of the term of this contract. This contract is not valid until said certificate is registered in the office of the Superintendent of Schools, and Teacher shall not be compensated for any services performed prior to the date of the registration.

TENTH: Teacher shall report to the District within 24 hours any arrest, criminal charge, or criminal conviction of Teacher. Teacher shall report to the District within 24 hours any filing against the Teacher under section 43-247 of the Nebraska statutes or any other provision of the Nebraska Juvenile Code for child abuse and/or neglect.

ELEVENTH: The compensation set forth in this agreement shall be subject to such adjustments as the Board and Teacher or Teacher's duly authorized bargaining agent may agree upon from time to time.

TWELFTH: Teacher's failure to return a signed copy of the contract or renewal agreement to the Superintendent of Schools or Secretary of the Board of Education of the District **on or before April 15, 2022** shall constitute a rejection of this offer of employment.

THIRTEENTH: Other Contract Terms:

Other Activity Sponsorships will be determined or assigned at a later date.

By: Janer Wood Date: 11/21/2024
Teacher

By: _____ Date: _____
Board President

Attest: _____ Date:_____

Board Secretary

2.11. Review, discuss, and take all necessary action on the audit from the 2023-24 fiscal year.
A motion to approve the audit completed and presented for the 2023-24 fiscal year for High Plains Community School Passed with a motion by Megan Pike and a second by Erin Meyer. Terry Carlstrom: Yea, Erin Meyer: Yea, Megan Pike: Yea, Nathan Spurling: Yea, Kraig Urkoski: Yea, Shane Van Pelt: Yea

HIGH PLAINS COMMUNITY SCHOOLS DISTRICT NO. 75

POLK, NEBRASKA

FINANCIAL STATEMENTS
AND INDEPENDENT AUDITORS' REPORT
AUGUST 31, 2024

FORWARD CPA

HIGH PLAINS COMMUNITY SCHOOLS DISTRICT NO. 75
POLK, NEBRASKA
TABLE OF CONTENTS

	Page
INDEPENDENT AUDITOR'S REPORT	1-4
FINANCIAL STATEMENTS	
Government-Wide Financial Statements	
Statement of Activities and Net Position - Modified Cash Basis	5-6
Fund Financial Statements	
Statement of Receipts, Disbursements, and Changes in Fund Balances - Modified Cash Basis and Statement Of Assets and Fund Balances - Modified Cash Basis - Governmental Funds	7-8
NOTES TO FINANCIAL STATEMENTS	9-21
SUPPLEMENTARY INFORMATION	
General Fund Components - Combining Schedule of Receipts, Disbursements, and Changes in Fund Balance - Modified Cash Basis and Schedule of Assets and Fund Balance - Modified Cash Basis	23-25
Nonmajor Funds - Combining Statement of Receipts, Disbursements, And Changes in Fund Balances - Modified Cash Basis and Statement Of Assets and Fund Balances - Modified Cash Basis	26-27
Schedule of Receipts, Disbursements, and Changes in Fund Balance - Modified Cash Basis - Budget and Actual	
General Fund	28-31
Depreciation Fund	32
Employee Benefit Fund	33
Activities Fund	34
School Nutrition Fund	35
Special Building Fund	36
Notes to Budgetary Schedules	37
REPORT REQUIRED BY *GOVERNMENT AUDITING STANDARDS*	
Independent Auditor's Report on Internal Control Over Financial Reporting and on Compliance and Other Matters Based on an Audit of Financial Statements Performed in Accordance with *Government Auditing Standards*	38-39
SCHEDULE OF FINDINGS AND RESPONSES	40-42

INDEPENDENT AUDITOR'S REPORT

To the Board of Education
High Plains Community Schools District No. 75
Polk, Nebraska

Report on the Audit of the Financial Statements

Opinions

We have audited the accompanying modified cash basis financial statements of the governmental activities, each major fund, and the aggregate remaining fund information of High Plains Community Schools District No. 75, Polk, Nebraska, as of and for the year ended August 31, 2024, and the related notes to the financial statements, which collectively comprise the High Plains Community Schools District No. 75, Polk, Nebraska's basic financial statements as listed in the table of contents.

In our opinion, the financial statements referred to above present fairly, in all material respects, the respective modified cash basis financial position of the governmental activities, each major fund, and the aggregate remaining fund information of High Plains Community Schools District No. 75, Polk, Nebraska, as of August 31, 2024, and the respective changes in modified cash basis financial position for the year then ended in accordance with the modified cash basis of accounting as described in Note 1.

Basis for Opinions

We conducted our audit in accordance with auditing standards generally accepted in the United States of America and the standards applicable to financial audits contained in *Government Auditing Standards*, issued by the Comptroller General of the United States. Our responsibilities under those standards are further described in the Auditor's Responsibilities for the Audit of the Financial Statements section of our report. We are required to be independent of High Plains Community Schools District No. 75, Polk, Nebraska, and to meet our other ethical responsibilities, in accordance with the relevant ethical requirements relating to our audit. We believe that the audit evidence we have obtained is sufficient and appropriate to provide a basis for our audit opinions.

Emphasis of Matter – Basis of Accounting

We draw attention to Note 1 of the financial statements, which describes the basis of accounting. The financial statements are prepared on the modified cash basis of accounting, which is a basis of accounting other than accounting principles generally accepted in the United States of America. Our opinions are not modified with respect to this matter.

Responsibilities of Management for the Financial Statements

Management is responsible for the preparation and fair presentation of the financial statements in accordance with the modified cash basis of accounting described in Note 1, and for determining that the modified cash basis of accounting is an acceptable basis for the preparation of the financial statements in the circumstances. Management is also responsible for the design, implementation, and maintenance of internal control relevant to the preparation and fair presentation of financial statements that are free from material misstatement, whether due to fraud or error.

Auditor's Responsibilities for the Audit of the Financial Statements

Our objectives are to obtain reasonable assurance about whether the financial statements as a whole are free from material misstatement, whether due to fraud or error and to issue an auditor's report that includes our opinions. Reasonable assurance is a high level of assurance but is not absolute assurance and therefore is not a guarantee that an audit conducted in accordance with generally accepted auditing standards and *Government Auditing Standards* will always detect a material misstatement when it exists. The risk of not detecting a material misstatement resulting from fraud is higher than for one resulting from error, as fraud may involve collusion, forgery, intentional omissions, misrepresentations, or the override of internal control. Misstatements are considered material if there is a substantial likelihood that, individually or in the aggregate, they would influence the judgment made by a reasonable user based on the financial statements.

In performing an audit in accordance with generally accepted auditing standards and *Government Auditing Standards*, we:

- Exercise professional judgment and maintain professional skepticism throughout the audit.
- Identify and assess the risks of material misstatement of the financial statements, whether due to fraud or error, and design and perform audit procedures responsive to those risks. Such procedures include examining, on a test basis, evidence regarding the amounts and disclosures in the financial statements.
- Obtain an understanding of internal control relevant to the audit in order to design audit procedures that are appropriate in the circumstances, but not for the purpose of

expressing an opinion on the effectiveness of High Plains Community Schools District No. 75, Polk, Nebraska's internal control. Accordingly, no such opinion is expressed.

- Evaluate the appropriateness of accounting policies used and the reasonableness of significant accounting estimates made by management, as well as evaluate the overall presentation of the financial statements.
- Conclude whether, in our judgment, there are conditions or events, considered in the aggregate, that raise substantial doubt about High Plains Community Schools District No. 75, Polk, Nebraska's ability to continue as a going concern for a reasonable period of time.

We are required to communicate with those charged with governance regarding, among other matters, the planned scope and timing of the audit, significant audit findings, and certain internal control-related matters that we identified during the audit.

Supplementary Information

Our audit was conducted for the purpose of forming opinions on the financial statements that collectively comprise High Plains Community Schools No. 75, Polk, Nebraska's basic financial statements. The supplementary information on pages 23 – 37 is presented for purposes of additional analysis and is not a required part of the basic financial statements.

The supplementary information on pages 23 - 37 is the responsibility of management and was derived from and relates directly to the underlying accounting and other records used to prepare the basic financial statements. The information has been subjected to the auditing procedures applied in the audit of the basic financial statements and certain additional procedures, including comparing and reconciling such information directly to the underlying accounting and other records used to prepare the basic financial statements or to the basic financial statements themselves, and other additional procedures in accordance with auditing standards generally accepted in the United States of America. In our opinion, the supplementary information on pages 23 - 37 is fairly stated, in all material respects, in relation to the basic financial statements as a whole.

Other Reporting Required by Government Auditing Standards

In accordance with *Government Auditing Standards*, we have also issued our report dated November 4, 2024, on our consideration of the High Plains Community Schools No. 75, Polk, Nebraska's internal control over financial reporting and on our tests of its compliance with certain provisions of laws, regulations, contracts, and grant agreements and other matters. The purpose of that report is solely to describe the scope of our testing of internal control over financial reporting and compliance and the results of that testing, and not to provide an opinion on the effectiveness of the High Plains Community Schools No. 75, Polk, Nebraska's internal control over financial reporting or on compliance. That report is an integral part of an audit performed in accordance with *Government Auditing Standards* in considering High

Plains Community Schools No. 75, Polk, Nebraska's internal control over financial reporting and compliance.

Forward CPA, LLC

Omaha, Nebraska
November 4, 2024

HIGH PLAINS COMMUNITY SCHOOL DISTRICT NO 75
POLK, NEBRASKA
STATEMENT OF ACTIVITIES AND NET POSITION - MODIFIED CASH BASIS
FOR THE YEAR ENDED AUGUST 31, 2024

		Program Receipts		Net (Disbursements) Receipts and Changes in Net Position Primary Government
	Disburse-ments	Charges for Services	Operating Grants and Contributions	Total Governmental Activities
FUNCTIONS/ PROGRAMS				
Governmental activities				
Instruction	3,225,873	-	657,194	(2,568,679)
Student support services	602,520	201,750		(400,770)
Instructional support	218,114			(218,114)
General administration	250,576			(250,576)
School administration	353,734			(353,734)
Central and business services	159,632			(159,632)
Operation and maintenance of plant	918,011			(918,011)
Student transportation	265,149		15,983	(249,166)
Nutrition program	191,246	70,099	68,673	(52,474)
Debt service				
Principal	420,000			(420,000)
Interest	30,380			(30,380)
Capital outlay	369,064			(369,064)
Total governmental activities	7,004,299	271,849	741,850	(5,990,600)
General receipts				
Taxes				
Property taxes - general purpose				4,871,578
Carline tax				6,843
Motor vehicle taxes				223,514
Public Power District sales tax				12,560
Interest				68,720
Licenses and fees				15,330
State aid				355,717
State apportionment				35,646
Homestead exemption				40,502
Property tax credit				678,256
State and federal funds not restricted for specific purpose				20,799
Other				39,580
Total general receipts				6,369,045
CHANGE IN NET POSITION				378,445
NET POSITION, beginning of year				6,178,496
NET POSITION, end of year				6,556,941

HIGH PLAINS COMMUNITY SCHOOL DISTRICT NO 75
POLK, NEBRASKA
STATEMENT OF ACTIVITIES AND NET POSITION - MODIFIED CASH BASIS (CONTINUED)
FOR THE YEAR ENDED AUGUST 31, 2024

		Program Receipts			Net (Disbursements) Receipts and Changes in Net Position
					Primary Government
	Disburse-ments	Charges for Services	Operating Grants and Contributions	Capital Grants and Contributions	Total Governmental Activities
ASSETS					
Cash					5,433,710
Cash at county treasurers					1,123,231
TOTAL ASSETS					6,556,941
NET POSITION					
Restricted for capital outlay					2,634,065
Restricted for nutrition program					36,134
Unrestricted					3,886,742
TOTAL NET POSITION					6,556,941

See accompanying notes to financial statements.

HIGH PLAINS COMMUNITY SCHOOL DISTRICT NO 75
POLK, NEBRASKA
STATEMENT OF RECEIPTS, DISBURSEMENTS, AND CHANGES IN
FUND BALANCES - MODIFIED CASH BASIS AND
STATEMENT OF ASSETS AND FUND BALANCES - MODIFIED CASH BASIS
GOVERNMENTAL FUNDS
FOR THE YEAR ENDED AUGUST 31, 2024

	General Fund	Special Building Fund	Other Governmental Funds	Total Governmental Funds
RECEIPTS				
Local receipts				
Property taxes - general purpose	3,927,950	943,628		4,871,578
Carline tax	6,843			6,843
Motor vehicle taxes	223,514			223,514
Public Power District sales tax	10,143	2,417		12,560
Interest	62,624	5,780	316	68,720
Licenses and fees	980			980
Other local receipts	26,872	1,535		28,407
Nutrition program receipts			70,099	70,099
Student activities			201,750	201,750
County receipts	14,350			14,350
State receipts	1,512,190	140,772	874	1,653,836
Federal receipts	151,135		67,799	218,934
Other	9,223		1,950	11,173
Total receipts	5,945,824	1,094,132	342,788	7,382,744
DISBURSEMENTS				
Instruction	3,225,873			3,225,873
Student support services	321,483		281,037	602,520
Instructional support	218,114			218,114
General administration	250,576			250,576
School administration	353,734			353,734
Central and business services	159,632			159,632
Operation and maintenance of plant	918,011			918,011
Student transportation	265,149			265,149
Nutrition program			191,246	191,246
Debt service				
Principal		420,000		420,000
Interest		30,380		30,380
Capital outlay		369,064		369,064
Total disbursements	5,712,572	819,444	472,283	7,004,299
RECEIPTS OVER (UNDER) DISBURSEMENTS	233,252	274,688	(129,495)	378,445
OTHER FINANCING SOURCES (USES)				
Transfers in	-		155,000	155,000
Transfer out	(155,000)		-	(155,000)
Total other financing sources (uses)	(155,000)	-	155,000	-
NET CHANGE IN FUND BALANCES	78,252	274,688	25,505	378,445
FUND BALANCES, beginning of year	3,606,447	2,359,377	212,672	6,178,496
FUND BALANCES, end of year	3,684,699	2,634,065	238,177	6,556,941

HIGH PLAINS COMMUNITY SCHOOL DISTRICT NO 75
POLK, NEBRASKA
STATEMENT OF RECEIPTS, DISBURSEMENTS, AND CHANGES IN
FUND BALANCES - MODIFIED CASH BASIS AND
STATEMENT OF ASSETS AND FUND BALANCES - MODIFIED CASH BASIS
GOVERNMENTAL FUNDS
FOR THE YEAR ENDED AUGUST 31, 2024

	General Fund	Special Building Fund	Other Governmental Funds	Total Governmental Funds
ASSETS				
ASSETS				
Cash	2,773,870	2,421,663	238,177	5,433,710
Cash at county treasurers	910,829	212,402		1,123,231
TOTAL ASSETS	3,684,699	2,634,065	238,177	6,556,941
FUND BALANCES				
FUND BALANCES				
Restricted				
Capital outlay		2,634,065		2,634,065
Nutrition program			36,134	36,134
Committed				
Student activities			202,043	202,043
Assigned				
Capital outlay	471,375			471,375
Employee benefits	11,977			11,977
Future year's budget	610,268			610,268
Unassigned	2,591,079			2,591,079
Total fund balances	3,684,699	2,634,065	238,177	6,556,941
TOTAL FUND BALANCES	3,684,699	2,634,065	238,177	6,556,941

See accompanying notes to financial statements.

NOTE 1: SUMMARY OF SIGNIFICANT ACCOUNTING POLICIES

The Governmental Accounting Standards Board (GASB) is the accepted standard-setting body for establishing governmental accounting and financial reporting principles. The following is a summary of the significant accounting policies of High Plains Community Schools No. 75, Polk, Nebraska (the District).

Reporting Entity

The District's Board of Education is the basic level of government, which has financial accountability and control over all activities related to public school education in the District. The District receives funding from local, state, and federal government sources and must comply with the requirements of these funding source entities. However, the District is not included in any other governmental "reporting entity" as defined by the GASB pronouncement, since the District's board members are elected by the public and have decision-making authority, the authority to levy taxes, the power to designate management, the ability to significantly influence operations, and primary accountability for fiscal matters.

All significant activities and organizations on which the District exercises oversight responsibility have been included in the District's financial statements.

Component Units

The criteria for including organizations as component units with the District's reporting entity, as set forth in Section 2100 of GASB's *Codification of Governmental Accounting and Financial Reporting Standards*, include whether:

- The organization is legally separate (can sue and be sued in their own name).
- The District holds the corporate powers of the organization.
- The District appoints a voting majority of the organization's board.
- The District is able to impose its will on the organization.
- The organization has the potential to impose a financial benefit/burden on the District.
- There is fiscal dependency by the organization on the District.

Based on the aforementioned criteria, there are no component units of the District.

Government-Wide Statements

The District utilizes the provisions of GASB Statement 34, *Basic Financial Statements and Management's Discussion and Analysis for State and Local Governments*. Statement 34 established standards for external financial reporting for all state and local government entities, which includes government-wide financial statements, fund

NOTE 1: SUMMARY OF SIGNIFICANT ACCOUNTING POLICIES (continued)

Government-Wide Statements (continued)

financial statements, and the classification of net position into the following components: restricted and unrestricted.

The statement of net position and statement of activities report information on the District as a whole. The effects of inter-fund activity have been removed from these statements. Governmental activities, which normally are supported by taxes and intergovernmental receipts, are reported separately from business-type activities, which rely to a significant extent on fees and charges for support. The District does not report any business-type activities.

The statement of activities demonstrates the degree to which the direct disbursements of a given function or segment are offset by program receipts. Direct disbursements are those that are clearly identifiable with a specific function or segment. Program receipts include (1) charges to customers or applicants who purchase, use, or directly benefit from goods, services, or privileges provided by a given function or segment and (2) grants and contributions that are restricted to meeting the operational or capital requirements of a particular function or segment. Taxes and other items not properly included in program receipts are reported as general receipts.

Fund Financial Statements

The fund financial statements of the reporting entity are organized into funds, each of which is considered a separate accounting entity. Each fund is accounted for by providing a separate set of self-balancing accounts that constitute its assets, liabilities, fund equity, receipts, and expenditures. All of the District's funds are considered governmental funds. An emphasis is placed on major funds within the governmental category. A fund is considered major if it is the primary operating fund of the District, meets specific mathematical criteria set forth by GASB, or is identified as a major fund by the District's management. All remaining governmental funds by category are summarized into a single column as nonmajor governmental funds.

The District reports the following major governmental funds:

General Fund - The General Fund is the general operating fund of the District and accounts for all receipts and disbursements of the District not encompassed within other funds. All property tax receipts and other receipts that are not allocated by law, budgetary requirement, or contractual agreement to some other fund are accounted for in this fund. General operating disbursements and the new replacement capital outlay costs that are not paid through other funds are paid from the General Fund.

NOTE 1: SUMMARY OF SIGNIFICANT ACCOUNTING POLICIES (continued)

Fund Financial Statements (continued)

The General Fund for financial reporting purposes also includes the following components, which are considered funds for budgetary purposes but do not meet the definition as special revenue funds as clarified in GASB 54, or whose activities are insignificant and reporting as part of the General Fund is allowable.

Depreciation Fund - The Depreciation Fund is used to accumulate funds for the eventual purchase of significant capital outlay by reserving such monies from the General Fund.

Employee Benefit Fund - The Employee Benefit Fund is established to specifically reserve General Fund money for the benefit of the District employees.

Special Building Fund - The Special Building Fund is established for acquiring or improving sites and buildings, including the construction, alteration, or improvement of buildings.

The District reports the following nonmajor governmental funds:

School Nutrition Fund - The School Nutrition Fund is used to accommodate all aspects of the School Lunch Program and accounts for all receipts and disbursements of all Child Nutrition Programs.

Activities Fund - The Activities Fund is used to account for the financial operations of quasi-independent student organizations, interschool athletics, and other self-supporting or partially self-supporting school activities not part of another fund.

Basis of Accounting

The District prepares its financial statements on the modified cash basis, which is in conformity with the accounting practices prescribed or permitted by the State of Nebraska Department of Education.

The modified cash basis of accounting is a basis of accounting other than GAAP as established by GASB. The modified cash basis of accounting is based on the recording of cash and cash equivalents and changes therein and only recognizes revenues, expenses, assets, and liabilities resulting from cash transactions, adjusted for modifications that have substantial support in generally accepted accounting principles.

NOTE 1: SUMMARY OF SIGNIFICANT ACCOUNTING POLICIES (continued)

Basis of Accounting (continued)

Only cash (and cash equivalents) and items that involve the receipt or disbursement of cash (or equivalents) during the period are recognized, except for the following modifications:

Assets that normally convert to cash or cash equivalents (e.g., certificates of deposit) that arise from transactions and events involving cash or cash equivalents are recognized;

Taxes and other revenues collected by the county treasurers are included in revenues of the District in the year collected by the counties and the District funds held by the county treasurers at year-end are included as assets of the District. This is in accordance with the requirements of the State of Nebraska Department of Education.

As a result of the use of this modified cash basis of accounting, certain transactions are not recorded in the financial statements. For example, accounts receivable and revenue for billed or provided services that have not been collected in cash are not accrued as revenue or receivables. Additionally, capital assets, such as property, equipment, and infrastructure, and long-term liabilities, such as debt and compensated absences, are not reported. Right-to-use assets and liabilities related to leases and subscription-based technology arrangements are not reported.

If the District utilized accounting principles generally accepted in the United States of America, the fund financial statements for governmental funds would use the modified accrual basis of accounting, and the fund financial statements for proprietary fund types would use the accrual basis of accounting. All government-wide financial statements would be presented in accordance with the accrual basis of accounting.

Capital Assets

Capital assets are not recorded as assets on the government-wide or fund financial statements, and depreciation is not recognized. Purchases of capital assets are recorded as disbursements by function in the financial statements.

Long-Term Obligations

Long-term debt is not reported as a liability in the government-wide or fund financial statements. Proceeds from long-term debt are reported as receipts and payments of principal are reported as disbursements in both the government-wide and fund financial statements.

NOTE 1: SUMMARY OF SIGNIFICANT ACCOUNTING POLICIES (continued)

Equity Classification

Government-Wide Statements

Equity is classified as a net position and displayed in two components:

Restricted net position consists of assets with constraints placed on the use either by external groups such as creditors, grantors, contributors, or laws and regulations of other governments or through constitutional provisions or enabling legislation.

Unrestricted net position consists of net assets that do not meet the definition of restricted.

It is the District's policy to use restricted net position first, prior to the use of unrestricted net position, when a disbursement is paid for purposes in which both restricted and unrestricted net position are available.

Fund Financial Statements

Governmental fund equity is classified as fund balance.

Fund Balance Classification

The governmental fund financial statements present fund balances based on classifications that comprise a hierarchy that is based primarily on the extent to which the District is bound to honor constraints on the specific purposes for which amounts in the respective governmental funds can be spent. The classifications used in the governmental fund financial statements are as follows:

Nonspendable

This classification includes amounts that cannot be spent because they either are not in spendable form or because they are legally or contractually required to be maintained intact. The District currently has no amounts classified in this category.

Restricted

This classification includes amounts for which constraints have been placed on the use of the resources either (a) externally imposed by creditors (such as through a debt covenant), grantors, contributors, or

NOTE 1: SUMMARY OF SIGNIFICANT ACCOUNTING POLICIES (continued)

Equity Classification (continued)

Fund Financial Statements (continued)

laws and regulations of other governments or (b) imposed by law through constitutional provisions or enabling legislation.

Committed

This classification includes amounts that can be used only for specific purposes pursuant to constraints imposed by formal action of the Board of Education. These amounts cannot be used for any other purpose unless the Board removes or changes the specified use by taking the same type of action (ordinance or resolution) that was employed when the funds were initially committed. This classification also includes contractual obligations to the extent that existing resources have been specifically committed for use in satisfying those contractual requirements.

Assigned

This classification includes amounts that are constrained by the District's intent to be used for a specific purpose but are neither restricted nor committed. This intent can be expressed by the Board of Education or through the Board delegating this responsibility to the District administrator through the budgetary process.

Unassigned

This classification includes the residual fund balance for the General Fund.

The District would typically use restricted fund balances first, followed by committed resources, and then assigned resources, as appropriate opportunities arise, but reserves the right to selectively spend unassigned resources first to defer the use of these other classified funds.

Inter-fund Balances and Activities

In the process of aggregating the financial information of the government-wide financial statements, some amounts reported as inter-fund activity and balances in the fund financial statements have been eliminated or reclassified.

NOTE 1: SUMMARY OF SIGNIFICANT ACCOUNTING POLICIES (continued)

Budget Process and Property Taxes

The District is required by state law to hold public hearings and adopt annual budgets for all funds on the modified cash basis of accounting. Total disbursements for each fund may not exceed the total budgeted disbursements. The General Fund is also subject to a total non-special education disbursement limit. Appropriations for disbursements lapse at year-end. Any revisions to the adopted budget of total disbursements to any fund require a public hearing. State statutes of the Nebraska Budget Act provide the prescribed budget practices and procedures that governing bodies are required to follow. The amounts that may be budgeted for certain specific funds are subject to various disbursements and/or tax levy limitations.

The property tax requirement resulting from the budget process is utilized to establish the tax levy in accordance with state statutes, which tax levy attaches as an enforceable lien on property within the District as of January 1. Taxes are due as of that date. One-half of the real estate taxes due January 1 become delinquent after the following May 1, with the second one-half becoming delinquent after September 1.

Compensated Absences

In accordance with the modified cash basis of accounting, vacation, and sick leave are recorded when paid.

Use of Estimates

The preparation of financial statements in conformity with the modified cash basis of accounting used by the District requires management to make estimates and assumptions that affect certain reported amounts and disclosures; accordingly, actual results could differ from those estimates.

Right to Use Assets

Right-to-use assets are not recorded as assets on the government-wide or fund financial statements, and amortization is not recognized. Likewise, the related liabilities for these leases and subscription-based technology arrangements are not recognized in the financial statements. Payment on all leases and subscription-based technology arrangements are recorded as disbursements by function in the financial statements.

NOTE 2: CASH AND INVESTMENTS

For the following disclosures, deposits - including checking accounts, savings accounts, money market accounts, and certificates of deposit - are all classified as cash on the financial statements.

NOTE 2: CASH AND INVESTMENTS (continued)

The District's cash and investments are reported as follows:

Governmental-type activities	$ 5,433,710

The carrying value (fair value) of the cash and investments consisted of the following:

Checking and savings accounts	$ 5,261,938
Certificates of deposit	$ 171,772
Total cash and investments	$ 5,433,710

As of August 31, 2024, there were no certificates of deposit maturing beyond one year.

Custodial Credit Risk - Deposits

Custodial credit risk is the risk that in the event of a bank failure, the District's deposits may not be returned to it. As of August 31, 2024, all of the District's deposits with financial institutions were fully insured or collateralized by securities held in the District's name in the form of joint safekeeping receipts. State law requires all funds in depositories to be fully insured or collateralized, and the District's policy is to require depositories to provide pledged securities to cover deposits in excess of Federal Deposit Insurance Corporation (FDIC) limits.

NOTE 3: RETIREMENT PLAN

Plan Description

High Plains Community School No. 75, Polk, Nebraska, contributes to the Nebraska School Employees Retirement System, a cost-sharing multiple-employer defined benefit pension plan administered by the Nebraska Public Employees Retirement System (NPERS). NPERS provides retirement and disability benefits to plan members and beneficiaries. The School Employees Retirement Act establishes benefit provisions.

In 1945, the Nebraska Legislature enacted the law establishing a retirement plan for school employees of the State. During the NPERS fiscal year ended June 30, 2023, there were 263 participating school districts. These were the districts that had contributions during the fiscal year. All regular public school employees in Nebraska, other than those who have their own retirement plans (Class V school districts, Nebraska State Colleges, University of Nebraska, and Nebraska Community Colleges), are members of the plan.

NOTE 3: RETIREMENT PLAN (continued)

Plan Description (continued)

Normal retirement is at age 65. For an employee who became a member before July 1, 2013, the monthly benefit is equal to the greater of the following: (1) the sum of a savings annuity, which is the actuarial equivalent of the member's accumulated contributions and a service annuity equal to $3.50 per year of service; or (2) the monthly average of the three 12-month periods of service as a school employee in which such compensation was the greatest, multiplied by total years of creditable service, multiplied by a formula factor of two percent, and an actuarial factor based on age.

For an employee who became a member on or after July 1, 2013, the monthly benefit is equal to the greater of the following: (1) the sum of a savings annuity, which is the actuarial equivalent of the member's accumulated contributions and a service annuity equal to $3.50 per year of service; or (2) the average of the five 12-month periods of service as a school employee in which such compensation was the greatest, multiplied by total years of creditable service, multiplied by a formula factor of two percent, and an actuarial factor based on age.

Benefit calculations vary with early retirement. Employees' benefits are vested after five years of plan participation or when termination occurs at age 65 or later. Vested members are eligible to receive an unreduced retirement benefit at age 65.

For school employees who became members prior to July 1, 2013, the benefit paid to a retired member or beneficiary receives an annual cost of living adjustment, which is increased by the lesser of the percentage change in the Consumer Price Index for Urban Wage Earners and Clerical Workers or two and one-half percent. The current benefit paid to a retired member or beneficiary is adjusted so that the purchasing power of the benefit being paid is not less than 75 percent of the purchasing power of the initial benefit.

For school employees who became members on or after July 1, 2013, the benefit paid to a retired member or beneficiary receives an annual cost-of-living adjustment, which is increased by the lesser of the percentage change in the Consumer Price Index for Urban Wage Earners and Clerical Workers or one percent. There is no purchasing power floor for employees who fall under this tier.

Contributions

The State's contribution is based on an annual actuarial valuation. In addition, the State contributes an amount equal to two percent of the compensation of all members. This contribution is considered a non-employer contribution since school employees are not employees of the State. The employee contribution was equal to 9.78 percent from July 1, 2022 to June 30, 2023, (and from July 1, 2023 through August 31, 2024). The

NOTE 3: RETIREMENT PLAN (continued)

Contributions (continued)

school district (employer) contribution is 101 percent of the employee contribution. The District's contribution to the Plan for the year ended August 31, 2024, was $264,351.

For the District's year ended August 31, 2024, the District's total payroll for all employees was $2,801,588. The total covered payroll was $2,676,208. Covered payroll refers to all compensation paid by the District to active employees covered by the Plan.

Plan Fiduciary Net Position

Detailed information about the Plan's fiduciary net position is available in the separately issued Nebraska Public Employees Retirement Systems Plan financial report. NPERS issues a publicly available financial report that includes financial statements and required supplementary information. That report may be obtained via the internet at http://www.auditors.nebraska.gov.

NOTE 4: EARLY LEAVE INCENTIVE PROGRAM

The District offers an Early Leave Incentive Program for full-time certified teachers and administrators to offer financial incentives that will assist long-term employees considering early retirement or early leave decisions. To participate in the program, the employee submits a written application by February 1 prior to the school year in which the employee wishes to discontinue full-time employment. Employees must have reached the minimum age of fifty-five (55) as of August 31 in the year of application. Employees must have a minimum of fifteen (15) consecutive years of credited service with the District. The benefit paid under the program is 2.5% multiplied by the number of years of continuous service at the District (up to 25 years) multiplied by the scheduled salary for the last full year of employment. The District made $32,377in payments for the Early Leave Incentive Program for the year ended August 31, 2024. The liabilities for future years are as follows:

Year Ending August 31,	
2025	46,320
2026	24,516
2027	19,944
	90,780

NOTE 5: LONG-TERM DEBT

Capital Financing Agreement (Direct Borrowing)

A capital financing agreement, dated August 2021, for $3,000,000, with First National Capital Markets for a building remodel project, requires principal payments each April through April 2028. Interest is due semiannually each April and October. This agreement has an effective interest rate of 1.400%.

The District has no unused lines of credit at August 31, 2024, and none of their long-term debt agreements have terms related to default or termination events with finance-related consequences, or subjective acceleration clauses.

Changes in Long-Term Debt

	Capital Financing Agreement
Balance, beginning of year	2,170,000
Principal payments	(420,000)
Balance, end of year	1,750,000

Future Maturities

Maturities on the above long-term debt are as follows:

Years Ending August 31,	Capital Financing Agreement		
	Principal	Interest	Total
2025	430,000	24,500	454,500
2026	435,000	18,480	453,480
2027	440,000	12,390	452,390
2028	445,000	6,230	451,230
	1,750,000	61,600	1,811,600

NOTE 6: LEASE AGREEMENTS

Lease agreements are summarized as follows:

Description	Date	Terms	Payment Amount	Balance at August 31, 2024
Copier Lease	6/21/2024	60 months	$ 1,283	$ 74,395

Copy machines were leased during June 2024, for a term of 60 months. At the end of the lease, the District has the option to purchase the equipment at fair market value, renew the agreement, or return the equipment. Payment terms are $1,283 per month. There are no other contingent or sublease rentals to the lease.

Annual requirements for the leased equipment are as follows:

Years Ending August 31	
2025	15,392
2026	15,392
2027	15,392
2028	12,827
Total	59,003

NOTE 8: RISK MANAGEMENT

The District is exposed to various risks of losses related to torts; thefts of, damage to, and destruction of assets; errors and omissions; injuries to employees; and natural disasters.

During the year, the District carried commercial insurance for general liability, public official's bond, commercial property coverage, worker's compensation coverage, commercial umbrella coverage, employee dishonesty coverage, commercial auto coverage, data processing coverage, and linebacker coverage. Settled claims resulting from these risks have not exceeded commercial insurance coverage in any of the past three fiscal years.

NOTE 9: TRANSFERS

The General Fund transferred $115,000 to the Depreciation Fund, $35,000 to the School Nutrition Fund, and $120,000 to the Activities Fund for support during the fiscal year.

NOTE 10: FEDERAL AWARD PROGRAMS

The District received funds under various federal grant programs, and such assistance is to be expended in accordance with provisions of the various grants. Compliance with the grants is subject to audit by various government agencies which may impose sanctions in the event of noncompliance. Management believes that they have complied with all aspects of the various grant provisions and the results of adjustments, if any, relating to such audits would not have any material impact.

NOTE 11: SUBSEQUENT EVENTS

In preparing the financial statements, the District has evaluated events and transactions for potential recognition or disclosure through November 4, 2024, the date the financial statements were available to be issued.

SUPPLEMENTARY INFORMATION

HIGH PLAINS COMMUNITY SCHOOL DISTRICT NO 75
POLK, NEBRASKA
GENERAL FUND COMPONENTS
COMBINING SCHEDULE OF RECEIPTS, DISBURSEMENTS, AND CHANGES IN FUND BALANCE
MODIFIED CASH BASIS AND SCHEDULE OF ASSETS AND FUND BALANCE - MODIFIED CASH BASIS
FOR THE YEAR ENDED AUGUST 31, 2024

	General Fund	Depreciation Fund	Employee Benefit Fund	Reclass-ifications	Total General Fund
RECEIPTS					
Local receipts					
Property taxes - general purpose	3,927,950				3,927,950
Carline tax	6,843				6,843
Motor vehicle taxes	223,514				223,514
Public Power District sales tax	10,143				10,143
Interest	61,456	1,013	155		62,624
Local licenses and fees	980				980
Other local receipts	26,872				26,872
County receipts	14,350				14,350
State receipts	1,512,190				1,512,190
Federal receipts	151,135				151,135
Other	8,289	150	784		9,223
Total receipts	5,943,722	1,163	939	-	5,945,824
DISBURSEMENTS					
Instruction	3,002,277		-	223,596	3,225,873
Student support services	321,483				321,483
Instructional support	218,114				218,114
General administration	250,576				250,576
School administration	353,734				353,734
Central and business services	159,632				159,632
Operation and maintenance of plant	800,056	117,955			918,011
Student transportation	380,149			(115,000)	265,149
State categorical programs	9,284			(9,284)	-
Federal programs	214,312			(214,312)	-
Total disbursements	5,709,617	117,955	-	(115,000)	5,712,572
RECEIPTS OVER (UNDER) DISBURSEMENTS	234,105	(116,792)	939	115,000	233,252

HIGH PLAINS COMMUNITY SCHOOL DISTRICT NO 75
POLK, NEBRASKA
GENERAL FUND COMPONENTS
COMBINING SCHEDULE OF RECEIPTS, DISBURSEMENTS, AND CHANGES IN FUND BALANCE
MODIFIED CASH BASIS AND SCHEDULE OF ASSETS AND FUND BALANCE - MODIFIED CASH BASIS
FOR THE YEAR ENDED AUGUST 31, 2024

	General Fund	Depreciation Fund	Employee Benefit Fund	Reclass-ifications	Total General Fund
OTHER FINANCING SOURCES (USES)					
Transfer in		115,000		(115,000)	-
Transfers out	(155,000)				(155,000)
Total other financing sources (uses)	(155,000)	115,000	-	(115,000)	(155,000)
NET CHANGE IN FUND BALANCE	79,105	(1,792)	939	-	78,252
FUND BALANCE, beginning of year	3,122,242	473,167	11,038		3,606,447
FUND BALANCE, end of year	3,201,347	471,375	11,977	-	3,684,699

HIGH PLAINS COMMUNITY SCHOOL DISTRICT NO 75
POLK, NEBRASKA
GENERAL FUND COMPONENTS
COMBINING SCHEDULE OF RECEIPTS, DISBURSEMENTS, AND CHANGES IN FUND BALANCE
MODIFIED CASH BASIS AND SCHEDULE OF ASSETS AND FUND BALANCE - MODIFIED CASH BASIS (CONTINUED)
FOR THE YEAR ENDED AUGUST 31, 2024

	General Fund	Depreciation Fund	Employee Benefit Fund	Reclass-ifications	Total General Fund
ASSETS					
Cash	2,290,518	471,375	11,977		2,773,870
Cash at county treasurers	910,829				910,829
TOTAL ASSETS	3,201,347	471,375	11,977	-	3,684,699
FUND BALANCE					
Assigned					
Capital outlay		471,375			471,375
Employee benefits			11,977		11,977
Future year's budget	610,268				610,268
Unassigned	2,591,079				2,591,079
Total fund balance	3,201,347	471,375	11,977	-	3,684,699
TOTAL FUND BALANCE	3,201,347	471,375	11,977	-	3,684,699

HIGH PLAINS COMMUNITY SCHOOL DISTRICT NO 75
POLK, NEBRASKA
NONMAJOR FUNDS - COMBINING STATEMENT OF RECEIPTS,
DISBURSEMENTS, AND CHANGES IN FUND BALANCES - MODIFIED CASH BASIS
AND STATEMENT OF ASSETS AND FUND BALANCES - MODIFIED CASH BASIS
FOR THE YEAR ENDED AUGUST 31, 2024

	School Nutrition Fund	Activities Fund	Total
RECEIPTS			
Local receipts			
Interest		316	316
Nutrition program receipts	70,099		70,099
Student activities		201,750	201,750
State receipts	874		874
Federal receipts	67,799		67,799
Other	1,950		1,950
Total receipts	140,722	202,066	342,788
DISBURSEMENTS			
Student support services		281,037	281,037
Nutrition program	191,246		191,246
Total disbursements	191,246	281,037	472,283
RECEIPTS UNDER DISBURSEMENTS	(50,524)	(78,971)	(129,495)
OTHER FINANCING SOURCES (USES)			
Transfers in	35,000	120,000	155,000
Transfers out			-
Total other financing sources (uses)	35,000	120,000	155,000
NET CHANGE IN FUND BALANCE	(15,524)	41,029	25,505
FUND BALANCE, beginning of year	51,658	161,014	212,672
FUND BALANCE, end of year	36,134	202,043	238,177

HIGH PLAINS COMMUNITY SCHOOL DISTRICT NO 75
POLK, NEBRASKA
NONMAJOR FUNDS - COMBINING STATEMENT OF RECEIPTS,
DISBURSEMENTS, AND CHANGES IN FUND BALANCES - MODIFIED CASH BASIS
AND STATEMENT OF ASSETS AND FUND BALANCES - MODIFIED CASH BASIS (CONTINUED)
FOR THE YEAR ENDED AUGUST 31, 2024

	School Nutrition Fund	Activities Fund	Total
ASSETS			
ASSETS			
Cash	36,134	202,043	238,177
TOTAL ASSETS	36,134	202,043	238,177
FUND BALANCE			
FUND BALANCE			
Restricted			
Nutrition program	36,134		36,134
Committed			
Student activities		202,043	202,043
Total fund balance	36,134	202,043	238,177
TOTAL FUND BALANCE	36,134	202,043	238,177

HIGH PLAINS COMMUNITY SCHOOL DISTRICT NO 75
POLK, NEBRASKA
SCHEDULE OF RECEIPTS, DISBURSEMENTS, AND CHANGES IN FUND BALANCE
MODIFIED CASH BASIS - BUDGET AND ACTUAL
GENERAL FUND
FOR THE YEAR ENDED AUGUST 31, 2024

		Original and Final Budget	2024 Actual	Over (Under) Budget
FUND BALANCE, beginning of year		2,642,732	3,122,242	479,510
RECEIPTS				
	Local sources			
	Taxes			
1100	Property taxes	4,529,384	3,927,950	(601,434)
1115	Carline taxes	7,000	6,843	(157)
1120	Public power district sales tax	12,000	10,143	(1,857)
1125	Motor vehicle taxes	180,000	223,514	43,514
1311	Tuition received from other districts	200		(200)
1510	Interest	8,000	61,456	53,456
1911	Local license fees		980	980
1925	Categorical grants		418	418
1980	Refund of prior year's expenditures		2,500	2,500
1990	Other local receipts	20,000	23,954	3,954
	Total local sources	4,756,584	4,257,758	(498,826)
	County sources			
2110	Fines and licenses	20,000	14,350	(5,650)
	Total county sources	20,000	14,350	(5,650)
	State sources			
3110	State aid	355,717	355,717	-
3120	Special education	235,000	503,717	268,717
3125	Special education pupil transportation (school age)	8,000	15,983	7,983
3130	Homestead exemption		32,689	32,689
3131	Property tax credit		547,738	547,738
3180	Pro-rate motor vehicle tax	9,000	9,858	858
3400	State apportionment	30,000	35,646	5,646

HIGH PLAINS COMMUNITY SCHOOL DISTRICT NO 75
POLK, NEBRASKA
SCHEDULE OF RECEIPTS, DISBURSEMENTS, AND CHANGES IN FUND BALANCE
MODIFIED CASH BASIS - BUDGET AND ACTUAL (CONTINUED)
GENERAL FUND
FOR THE YEAR ENDED AUGUST 31, 2024

		Original and Final Budget	2024 Actual	Over (Under) Budget
RECEIPTS (Continued)				
	State sources (Continued)			
3512	Distance education incentive payments		1,000	1,000
3535	High ability learners	3,000	2,342	(658)
3551	Career education		7,500	7,500
	Total state sources	640,717	1,512,190	871,473
	Federal sources			
4310	REAP	2,000	24,018	22,018
4505	Title I, Part A	140,000	26,011	(113,989)
4516	IDEA preschool base	300	2,061	1,761
4518	IDEA Part B (611) base enrollment poverty		37,939	37,939
4530	Other Federal sources	4,000	3,500	(500)
4708	Medicaid in public schools	25,000	4,366	(20,634)
4709	Medicaid administrative activities		2,042	2,042
4998	ESSER III		51,198	51,198
	Total federal sources	171,300	151,135	(20,165)
	Nonrevenue receipts			
5300	Proceeds from the disposal of property	548,215	3,395	(544,820)
5301	Insurance adjustments		4,894	4,894
5690	Other non-revenue receipts	322,616		(322,616)
	Total nonrevenue receipts	870,831	8,289	(862,542)
	Total receipts	6,459,432	5,943,722	(515,710)
TOTAL FUNDS AVAILABLE		9,102,164	9,065,964	(36,200)

HIGH PLAINS COMMUNITY SCHOOL DISTRICT NO 75
POLK, NEBRASKA
SCHEDULE OF RECEIPTS, DISBURSEMENTS, AND CHANGES IN FUND BALANCE
MODIFIED CASH BASIS - BUDGET AND ACTUAL (CONTINUED)
GENERAL FUND
FOR THE YEAR ENDED AUGUST 31, 2024

		Original and Final Budget	2024 Actual	Over (Under) Budget
DISBURSEMENTS				
1000	Instruction			
1100	Regular instruction	3,000,000	2,381,008	(618,992)
1150	Limited English Proficiency programs		20,227	20,227
1160	Poverty programs		97,013	97,013
1190	Early childhood educational programs		114,013	114,013
1200	Special education - students	525,000	379,048	(145,952)
1291	Special education - ages 3-5		1,927	1,927
1292	Special education - ages 0-2		770	770
1300	Summer school		8,271	8,271
2100	Support services - students	450,000		(450,000)
2120	Guidance services		86,165	86,165
2130	Health services		44,305	44,305
2140	Psychological services		24,313	24,313
2141	Psychological services - special education (school age)		74,408	74,408
2151	Speech pathology and audiology- special education (school age)		40,369	40,369
2153	Speech pathology and audiology- special education (Ages 0-2)		2,028	2,028
2161	Occupational therapy - special education (school age)		24,350	24,350
2162	Occupational therapy - special education (Ages 3-5)		1,078	1,078
2163	Occupational therapy - special education (Ages 0-2)		9,622	9,622
2171	Physical therapy - special education (school age)		9,910	9,910
2172	Physical therapy - special education (Ages 3-5)		2,528	2,528
2173	Physical therapy - special education (Ages 0-2)		2,407	2,407
2200	Support services - instruction	210,000		(210,000)
2211	School improvement		168	168
2220	Library/media services		73,476	73,476
2230	Instruction-related technology		144,470	144,470
2300	Support services - general administration			-
2310	Board of education	50,000	27,866	(22,134)
2320	Executive administration	240,000	211,462	(28,538)
2330	District legal services		11,248	11,248
2400	Support services - school administration			-
2410	Office of the principal	370,000	353,734	(16,266)

HIGH PLAINS COMMUNITY SCHOOL DISTRICT NO 75
POLK, NEBRASKA
SCHEDULE OF RECEIPTS, DISBURSEMENTS, AND CHANGES IN FUND BALANCE
MODIFIED CASH BASIS - BUDGET AND ACTUAL (CONTINUED)
GENERAL FUND
FOR THE YEAR ENDED AUGUST 31, 2024

		Original and Final Budget	2024 Actual	Over (Under) Budget
DISBURSEMENTS (Continued)				
2500	Central services			
2510	Fiscal	160,000	159,632	(368)
2600	Operation and maintenance of plant	750,000		(750,000)
2610	Operations of buildings		356,102	356,102
2620	Maintenance of buildings		419,575	419,575
2630	Care and upkeep of grounds		22,733	22,733
2650	Vehicle operation and maintenance (other than student transportation vehicles)	8,400	1,646	(6,754)
2700	Student transportation			-
2710	Regular student transportation	550,000	239,487	(310,513)
2712	School age special education student transportation	40,000	14,234	(25,766)
2713	Vehicle operation and purchasing - ages 3-5 SPED		11,428	11,428
2900	Other support services		115,000	115,000
3400	Categorical grants from corporations	3,000	-	(3,000)
3512	Distance education incentive payments	4,000	803	(3,197)
3535	High ability learners		1,365	1,365
3551	Career education		7,116	7,116
6000	Federal programs	250,000		(250,000)
6200	Title I, Part A: Improving basic programs		42,189	42,189
6310	Title II, Part A: Supporting effective instruction		80	80
6406	IDEA preschool base		2,081	2,081
6408	IDEA Part B base enrollment poverty		67,390	67,390
6992	REAP		21,870	21,870
6998	ESSER III		80,702	80,702
8000	Activities Fund support	200,000	120,000	(80,000)
8000	Nutrition Fund support		35,000	35,000
	Reappropriated budget	291,764		(291,764)
	Total disbursements	7,102,164	5,864,617	(1,237,547)
FUND BALANCE, end of year		2,000,000	3,201,347	1,201,347

ANALYSIS OF FUND BALANCE	
Cash	
Checking and savings	2,118,746
Certificates of deposit	171,772
	2,290,518
County treasurers	910,829
TOTAL FUND BALANCE	3,201,347

See accompanying notes to budgetary schedules.

HIGH PLAINS COMMUNITY SCHOOL DISTRICT NO 75
POLK, NEBRASKA
SCHEDULE OF RECEIPTS, DISBURSEMENTS, AND CHANGES IN FUND BALANCE
MODIFIED CASH BASIS - BUDGET AND ACTUAL
DEPRECIATION FUND
FOR THE YEAR ENDED AUGUST 31, 2024

	Original and Final Budget	2024 Actual	Over (Under) Budget
FUND BALANCE, beginning of year	374,310	473,167	98,857
RECEIPTS			
Interest		1,013	1,013
Other		150	150
Interfund transfers- disbursed from the General Fund	200,000	115,000	(85,000)
Total receipts	200,000	116,163	(83,837)
TOTAL FUNDS AVAILABLE	574,310	589,330	15,020
DISBURSEMENTS			
Capital outlay	574,310	117,955	(456,355)
FUND BALANCE, end of year	-	471,375	471,375

ANALYSIS OF FUND BALANCE	
Cash	
Checking and savings accounts	471,375

See accompanying notes to budgetary schedules.

HIGH PLAINS COMMUNITY SCHOOL DISTRICT NO 75
POLK, NEBRASKA
SCHEDULE OF RECEIPTS, DISBURSEMENTS, AND CHANGES IN FUND BALANCE
MODIFIED CASH BASIS - BUDGET AND ACTUAL
EMPLOYEE BENEFIT FUND
FOR THE YEAR ENDED AUGUST 31, 2024

	Original and Final Budget	2024 Actual	Over (Under) Budget
FUND BALANCE, beginning of year	5,462	11,038	5,576
RECEIPTS			
Interest		155	155
Other		784	784
Total receipts	-	939	939
TOTAL FUNDS AVAILABLE	5,462	11,977	6,515
DISBURSEMENTS	5,462	-	(5,462)
FUND BALANCE, end of year	-	11,977	11,977

ANALYSIS OF FUND BALANCE	
Cash	
Checking and savings accounts	11,977

See accompanying notes to budgetary schedules.

HIGH PLAINS COMMUNITY SCHOOL DISTRICT NO 75
POLK, NEBRASKA
SCHEDULE OF RECEIPTS, DISBURSEMENTS, AND CHANGES IN FUND BALANCE
MODIFIED CASH BASIS - BUDGET AND ACTUAL
ACTIVITIES FUND
FOR THE YEAR ENDED AUGUST 31, 2024

	Original and Final Budget	2024 Actual	Over (Under) Budget
FUND BALANCE, beginning of year	110,480	161,014	50,534
RECEIPTS			
Local receipts			
Activities receipts	235,000	201,750	(33,250)
Interest		316	316
General Fund support	40,000	120,000	80,000
Total receipts	275,000	322,066	47,066
TOTAL FUNDS AVAILABLE	385,480	483,080	97,600
DISBURSEMENTS			
Support services - students			
Other disbursements	385,480	281,037	(104,443)
Total disbursements	385,480	281,037	(104,443)
FUND BALANCE, end of year	-	202,043	202,043

ANALYSIS OF FUND BALANCE	
Cash	
Checking and savings accounts	202,043

See accompanying notes to budgetary schedules.

HIGH PLAINS COMMUNITY SCHOOL DISTRICT NO 75
POLK, NEBRASKA
SCHEDULE OF RECEIPTS, DISBURSEMENTS, AND CHANGES IN FUND BALANCE
MODIFIED CASH BASIS - BUDGET AND ACTUAL
SCHOOL NUTRITION FUND
FOR THE YEAR ENDED AUGUST 31, 2024

	Original and Final Budget	2024 Actual	Over (Under) Budget
FUND BALANCE, beginning of year	107,051	51,658	(55,393)
RECEIPTS			
Federal reimbursements	140,000	67,799	(72,201)
State reimbursements	15,000	874	(14,126)
Sales	54,000	70,099	16,099
Local receipts		1,950	1,950
Transfers from the General Fund	35,000	35,000	-
Total receipts	244,000	175,722	(68,278)
TOTAL FUNDS AVAILABLE	351,051	227,380	(123,671)
DISBURSEMENTS			
Cost of food supplies	351,051	81,000	(270,051)
Salaries and benefits		103,450	103,450
Repairs and maintenance		1,590	1,590
Supplies and materials		5,206	5,206
Total disbursements	351,051	191,246	(159,805)
FUND BALANCE, end of year	-	36,134	36,134
ANALYSIS OF FUND BALANCE			
Cash			
Checking and savings accounts		36,134	

See accompanying notes to budgetary schedules.

HIGH PLAINS COMMUNITY SCHOOL DISTRICT NO 75
POLK, NEBRASKA
SCHEDULE OF RECEIPTS, DISBURSEMENTS, AND CHANGES IN FUND BALANCE
MODIFIED CASH BASIS - BUDGET AND ACTUAL
SPECIAL BUILDING FUND
FOR THE YEAR ENDED AUGUST 31, 2024

	Original and Final Budget	2024 Actual	Over (Under) Budget
FUND BALANCE, beginning of year	1,516,462	2,359,377	842,915
RECEIPTS			
Local			
Property taxes	1,079,384	943,628	(135,756)
Carline tax		1,535	1,535
Public power district sales taxes		2,417	2,417
Interest	1,000	5,780	4,780
State			
Homestead exemption		7,813	7,813
Property tax credit	120,616	130,518	9,902
Pro-rate motor vehicle		2,441	2,441
Total receipts	1,201,000	1,094,132	(106,868)
TOTAL FUNDS AVAILABLE	2,717,462	3,453,509	736,047
DISBURSEMENTS			
Debt service - principal		420,000	420,000
Debt service - interest		30,380	30,380
Capital outlay	2,717,462	369,064	(2,348,398)
Total disbursements	2,717,462	819,444	(1,898,018)
FUND BALANCE, end of year	-	2,634,065	2,634,065

ANALYSIS OF FUND BALANCE	
Cash in bank	
Checking and savings accounts	2,421,663
County treasurers	212,402
TOTAL FUND BALANCE	2,634,065

See accompanying notes to budgetary schedules.

NOTE 1: SCHEDULES OF RECEIPTS, DISBURSEMENTS, AND CHANGES IN FUND BALANCE – MODIFIED CASH BASIS – BUDGET AND ACTUAL

Basis of Accounting

The accompanying schedules of receipts, disbursements, and changes in fund balance – modified cash basis – budget and actual are presented on the modified cash basis of accounting. This basis is generally consistent with the basis of accounting used in preparing the basic financial statements. All undisbursed appropriations lapse at the end of the budget year. For budgetary purposes, transfers to the Employee Benefit Fund and Depreciation Fund are reflected as functional disbursements in the General Fund when the transfer is made.

Budget Law

The District is required by state law to hold public hearings and adopt annual budgets for all funds on the modified cash basis of accounting. Total disbursements for each fund may not exceed the total budgeted disbursements. The General Fund is also subject to a total non-special education disbursement limit. Appropriations for disbursements lapse at year end. Any revisions to the adopted budget of total disbursements to any fund require a public hearing.

Reconciliation

The Nebraska Department of Education requires separate budgets for those funds considered as General Fund components for budget purposes.

A reconciliation of the General Fund financial reporting basis to the budgetary basis is as follows:

Receipts over disbursements - financial reporting basis	
General Fund	3,684,699
Receipts over disbursements - budgetary basis	
General Fund	3,201,347
Depreciation Fund	471,375
Employee Benefit Fund	11,977
	3,684,699

INDEPENDENT AUDITOR'S REPORT ON INTERNAL CONTROL OVER FINANCIAL REPORTING AND ON COMPLIANCE AND OTHER MATTERS BASED ON AN AUDIT OF FINANCIAL STATEMENTS PERFORMED IN ACCORDANCE WITH *GOVERNMENT AUDITING STANDARDS*

To the Board of Education
High Plains Community School District No. 75
Polk, Nebraska

We have audited, in accordance with the auditing standards generally accepted in the United States of America and the standards applicable to financial audits contained in *Government Auditing Standards* issued by the Comptroller General of the United States, the financial statements of the governmental activities, each major fund, and the aggregate remaining fund information of High Plains Community School District No. 75, Polk, Nebraska, as of and for the year ended August 31, 2024, and the related notes to the financial statements, which collectively comprise High Plains Community School District No. 75, Polk, Nebraska's basic financial statements, and have issued our report thereon dated November 4, 2024.

Report on Internal Control Over Financial Reporting

In planning and performing our audit of the financial statements, we considered High Plains Community School District No. 75, Polk, Nebraska's internal control over financial reporting (internal control) as a basis for designing audit procedures that are appropriate in the circumstances for the purpose of expressing our opinions on the financial statements, but not for the purpose of expressing an opinion on the effectiveness of High Plains Community School District No. 75, Polk, Nebraska' internal control. Accordingly, we do not express an opinion on the effectiveness of High Plains Community School District No. 75, Polk, Nebraska's internal control.

A *deficiency in internal control* exists when the design or operation of a control does not allow management or employees, in the normal course of performing their assigned functions, to prevent, or detect and correct, misstatements on a timely basis. A *material weakness* is a deficiency, or a combination of deficiencies, in internal control such that there is a reasonable possibility that a material misstatement of the entity's financial statements will not be

prevented, or detected and corrected on a timely basis. A *significant deficiency* is a deficiency, or a combination of deficiencies, in internal control that is less severe than a material weakness, yet important enough to merit attention by those charged with governance.

Our consideration of internal control was for the limited purpose described in the first paragraph of this section and was not designed to identify all deficiencies in internal control that might be material weaknesses or significant deficiencies and therefore, material weaknesses or significant deficiencies may exist that were not identified. We identified certain deficiencies in internal control, described in the accompanying schedule of findings and responses as items 2024-001 and 2024-002 to be material weaknesses.

Report on Compliance and Other Matters

As part of obtaining reasonable assurance about whether High Plains Community School District No. 75, Polk, Nebraska's financial statements are free from material misstatement, we performed tests of its compliance with certain provisions of laws, regulations, contracts, and grant agreements, noncompliance with which could have a direct and material effect on the financial statements. However, providing an opinion on compliance with those provisions was not an objective of our audit, and accordingly, we do not express such an opinion. The results of our tests disclosed no instances of noncompliance or other matters that are required to be reported under *Government Auditing Standards*.

High Plains Community School District No. 75, Polk, Nebraska's Response to Findings

Government Auditing Standards requires the auditor to perform limited procedures on High Plains Community School District No. 75, Polk, Nebraska's response to the findings identified in our audit and described in the accompanying schedule of findings and responses. High Plains Community School District No. 75, Polk, Nebraska's responses were not subjected to the auditing procedures applied in the audit of the financial statements, and accordingly, we express no opinion on the response.

Purpose of this Report

The purpose of this report is solely to describe the scope of our testing of internal control and compliance and the results of that testing, and not to provide an opinion on the effectiveness of the entity's internal control or on compliance. This report is an integral part of an audit performed in accordance with *Government Auditing Standards* in considering the entity's internal control and compliance. Accordingly, this communication is not suitable for any other purpose.

Forward CPA, LLC

Omaha, Nebraska
November 4, 2024

2024-001 SEGREGATION OF DUTIES

Criteria

Internal controls should be in place to ensure proper segregation of duties.

Condition

Due to the size of the District, there is limited segregation of duties over bookkeeping and accounting functions. The same individual routinely reconciles the bank statements; processes payroll, including initiation and control of automated banking transactions; makes journal entries; and manages the general ledger functions. Controls over Activities Fund receipts, especially cash gate receipts, are also limited.

Cause

The District has a limited number of personnel involved in the accounting functions.

Potential Effect

Because of the lack of segregation of duties, unauthorized transactions could occur.

Recommendation

Our recommendation is to implement procedures, such as reviews of bank statements and bank reconciliations by a board member or the superintendent, to improve segregation of duties issues. In addition, the Activities Fund bank statements should be reviewed by someone independent of the bookkeeping for the Fund. Deposits for gate receipts or other significant cash deposits should be verified to the supporting documents (such as cash count sheets or receipts) by an independent person, such as the Activities Director. All Activities Fund bills should be approved by the Board and such approval documented in the minutes. Further, we recommend that the Superintendent review a preliminary check journal each month to verify the coding of transactions during the period. This review should be documented.

2024-001 SEGREGATION OF DUTIES (continued)

District's Response

The Board of Education does review and approve all disbursements, except Activities Fund disbursements. The District and Board of Education will sustain their diligence in reviewing expenditures across all funds. Furthermore, the district will persist in evaluating internal controls, and where deemed necessary, will extend the segregation of duties.

2024-002 ACTIVITIES FUND

Criteria

Management is responsible for reconciling the accounts of the District.

Condition

Bank accounts were not reconciled on a monthly basis in the Activities Fund. In addition, material receipts and disbursements were not posted or not posted correctly to the general ledger system.

Cause

Some audit adjustments were oversights due to lack of training of accounting procedures. Additional errors were caused by the Activities Fund clerk not having a complete understanding of all procedures.

Potential Effect

This condition could result in undetected errors and irregularities and misstated interim financial reports. Multiple adjustments, including several material adjustments, to the District's accounting records were posted.

Recommendation

District personnel should prepare bank reconciliations for all bank accounts of the District on a monthly basis. Adjustments or corrections should be posted on a timely basis to ensure that financial data provided to management and those charged with governance is complete and accurate and to ensure that the financial statements will not include material misstatements. The District might

2024-002 ACTIVITIES FUND (Continued)

consider seeking assistance and/or training to help personnel better utilize accounting software.

District's Response

Management and those charged with governance have agreed to rectify and monitor the situation.

November 4, 2024

To the Board of Education
High Plains Community Schools District No. 75
260 S. Pine Street
Polk, NE 68654

Dear Members of the Board:

Our audit of High Plains Community Schools District No. 75, Polk, Nebraska for the year ended August 31, 2024, included tests of compliance necessary to conform to current Auditing Standards Generally Accepted in the United States of America and *Government Auditing Standards*. The audit also included tests for compliance with the calculation of Average Daily Membership reported on the Annual Statistical Summary Report as specified in 92 NAC 2, requirements of the Nebraska Budget Act (commencing with Section 13-501 R.R.S.), and the Tax Equity and Educational Opportunities Support Act (commencing with Section 79-1001 R.R.S.).

Our audit included testing of membership and attendance documentation that we determined necessary to conduct our audit in accordance with GAS, GAAS, and NDE Rule 1 requirements. In addition, we considered the District's controls over such reporting to determine appropriate audit procedures. Providing an opinion on compliance with the requirements related to the above reporting or on internal controls over such reporting were not objectives of our audit and, accordingly, we do not express any such opinions.

As a result of the above tests of compliance with High Plains Community Schools District No. 75, Polk, Nebraska's student membership and attendance reporting we state the following:

1. We documented the District's policies and procedures for collecting student membership and attendance data.
2. We determined that the District was following its policies and procedures for collecting student census data.
3. We determined that attendance at the District is collected at least daily and calculated to the nearest hundredth of a day.
4. We determined that the District maintains a cumulative attendance and membership record for each student.
5. We determined that the cumulative attendance and membership records contain the date of enrollment, number of days or partial days in attendance and absent during each school year enrolled, and the date of withdrawal or graduation.
6. We selected a sample of students from the District's attendance records for the year ended August 31, 2024, and traced the students to students' enrollment files to verify that the sample of students were enrolled as students of the District for the dates claimed in the attendance records.

7. We traced the totals reported by the District on its annual Student Summary Attendance report to the District's census recordkeeping system for the fiscal year ended August 31, 2024. See below discrepancies.

The following items were noted regarding attendance and membership reporting, which were not reportable instances of noncompliance required to be reported in the Independent Auditor's Report on Internal Control over Financial Reporting and on Compliance with Other Matters Based on an Audit of Financial Statements Performed in Accordance with Government Auditing Standards.

The total days of enrollment reported in ADVISER differed from the District's attendance records as follows:

2nd Grade	163.00 days
5th Grade	14.00 days

The district will contact ADVISER to resolve the issue.

Our audit also included testing a sample of General Fund disbursements for appropriate allocation to the school building level. A sample of expense allocations were tested verifying appropriate allocation to the school building level. The district allocation to the building level was appropriate.

This letter is intended solely for the information and use of the Board of Education, management, others within the District, and the Nebraska Department of Education and is not intended to be, and should not be, used by anyone other than these specified parties.

Yours truly,

Forward CPA, LLC

FORWARD CPA, LLC

November 4, 2024

To the Board of Education
High Plains Community Schools District No. 75
260 S. Pine Street
Polk, NE 68654

We have audited the financial statements of the governmental activities, each major fund, and the aggregate remaining fund information of High Plains Community Schools District No. 75, Polk, Nebraska for the year ended August 31, 2024. Professional standards require that we provide you with information about our responsibilities under generally accepted auditing standards and *Government Auditing Standards*, as well as certain information related to the planned scope and timing of our audit. We have communicated such information in our letter to you dated May 6, 2024. Professional standards also require that we communicate to you the following information related to our audit.

Significant Audit Matters

Qualitative Aspects of Accounting Practices

Management is responsible for the selection and use of appropriate accounting policies. The significant accounting policies used by High Plains Community Schools District No. 75, Polk, Nebraska are described in Note 1 to the financial statements. No new accounting policies were adopted and the application of existing policies was not changed during the year ended August 31, 2024. We noted no transactions entered into by High Plains Community Schools District No. 75, Polk, Nebraska during the year for which there is a lack of authoritative guidance or consensus. All significant transactions have been recognized in the financial statements in the proper period.

Accounting estimates are an integral part of the financial statements prepared by management and are based on management's knowledge and experience about past and current events and assumptions about future events. Certain accounting estimates are particularly sensitive because of their significance to the financial statements and because of the possibility that future events affecting them may differ significantly from those expected. There were no sensitive estimates affecting the financial statements.

The financial statement disclosures are neutral, consistent, and clear.

Difficulties Encountered in Performing the Audit

We encountered no significant difficulties in dealing with management in performing and completing our audit.

Corrected and Uncorrected Misstatements

Professional standards require us to accumulate all known and likely misstatements identified during the audit, other than those that are clearly trivial, and communicate them to the appropriate level of management. Management has corrected all such misstatements. The attached material misstatements were detected as a result of audit procedures and were corrected by management.

Disagreements with Management

For purposes of this letter, a disagreement with management is a financial accounting, reporting, or auditing matter, whether or not resolved to our satisfaction, that could be significant to the financial statements or the auditor's report. We are pleased to report that no such disagreements arose during the course of our audit.

Management Representations

We have requested certain representations from management that are included in the management representation letter dated November 4, 2024.

Management Consultations with Other Independent Accountants

In some cases, management may decide to consult with other accountants about auditing and accounting matters, similar to obtaining a "second opinion" on certain situations. If a consultation involves application of an accounting principle to High Plains Community Schools District No. 75, Polk, Nebraska's financial statements or a determination of the type of auditor's opinion that may be expressed on those statements, our professional standards require the consulting accountant to check with us to determine that the consultant has all the relevant facts. To our knowledge, there were no such consultations with other accountants.

Other Audit Findings or Issues

We generally discuss a variety of matters, including the application of accounting principles and auditing standards, with management each year prior to retention as High Plains Community Schools District No. 75, Polk, Nebraska's auditors. However, these discussions occurred in the normal course of our professional relationship and our responses were not a condition to our retention.

Other Matters

We were engaged to report on the supplementary information, which accompany the financial statements but are not RSI. With respect to this supplementary information, we made certain inquiries of management and evaluated the form, content, and methods of preparing the information to determine that the information complies with the modified cash basis of accounting, the method of preparing it has not changed from the prior period, and the information is appropriate and complete in relation to our audit of the financial statements. We compared and reconciled the supplementary information to the underlying accounting records used to prepare the financial statements or to the financial statements themselves.

Restriction on Use

This information is intended solely for the information and use of the board of education and management of High Plains Community Schools District No. 75, Polk, Nebraska and is not intended to be, and should not be, used by anyone other than these specified parties.

Very truly yours,

Forward CPA, LLC

FORWARD CPA, LLC

High Plains Community School Audit - 2024 (generated on: 10/31/24 19:54:06 UTC)

SUMMARY

Currently showing **all** types of journal entries.

Adjustment Type	Assets	Liabilities	Equity	Net Income
Adjusting (21)	*(38,132.30)*	*0.00*	*(344.00)*	*(94,981.41)*
Total	**(38,132.30)**	**0.00**	**(344.00)**	**(94,981.41)**

Adjustment 1

Notes: To reclassify interest expense paid on lease purchase agreement.

Adjusting

Account	Debits	Credits
Building: 08 5000 831 000 - Reduce Principal of Loan	-	15,190.00
Building: 08 5000 832 000 - Interest on Long-Term Debt	15,190.00	-
✔ **Net income effect: 0**	**Dr: 15,190.00**	**Cr: 15,190.00**

Adjustment 2

Notes: To adjust beginning fund balance.

Adjusting

Account	Debits	Credits
Activities: 05 704 - FUND BALANCE	344.00	-
Activities: 05 1990 - MISCELLANEOUS LOCAL REVENUE	-	344.00
✔ **Net income effect: 344**	**Dr: 344.00**	**Cr: 344.00**

Adjustment 3

Notes: To reclassify receipts to match the NDE confirmation.

Adjusting

Account	Debits	Credits
General: 01 4998 - ESSER 3	150.00	-
General: 01 1990 - OTHER LOCAL RECEIPTS	-	150.00
Nutrition: 06 3150 - STATE REIMBURSEMENT	46,137.00	-
Nutrition: 06 3200 - GRANTS	11,206.11	-
Nutrition: 06 4210 - FEDERAL NUTRITION PROGRAM	-	57,343.11
✔ **Net income effect: (57,193)**	**Dr: 57,493.11**	**Cr: 57,493.11**

Adjustment 4

Notes: To record interest income on CDs.

Adjusting

Account	Debits	Credits
General: 01 106 - INVESTMENTS CDs	6,323.14	-
General: 01 1510 - INTEREST ON LOCAL REVENUE	-	6,323.14
✔ **Net income effect: 6,323**	**Dr: 6,323.14**	**Cr: 6,323.14**

Adjustment 5

Notes: To reclassify receipts between MIPS and MAAPS.

Adjusting

Account	Debits	Credits
General: 01 4708 - MEDICAID IN PUBLIC SCHOOLS	2,041.92	-
General: 01 4709 - MEDICAID ADMIN ACTIVITIES	-	2,041.92
✔ **Net income effect: 0**	**Dr: 2,041.92**	**Cr: 2,041.92**

Adjustment 6

Notes: To adjust accounts payable balance in the general fund.

Adjusting

Account	Debits	Credits
General: 01 402 - ACCOUNTS PAYABLE	836.56	-
General: 01 1100 291 001 - OTHER EMPLOYEE BENEFITS	-	836.56
✔ **Net income effect: 837**	**Dr: 836.56**	**Cr: 836.56**

Adjustment 7

Notes: To adjust transfers recorded to appropriate accounts.

Adjusting

Account	Debits	Credits
Activities: 05 1990 - MISCELLANEOUS LOCAL REVENUE	118,000.00	-
Activities: 05 5200 - FUND TRANSFERS IN	-	118,000.00
✔ **Net income effect: 0**	**Dr: 118,000.00**	**Cr: 118,000.00**

Adjustment 8

Notes: To adjust 9000 accounts to balance.

Adjusting

Account	Debits	Credits
General: 01 5690 - OTHER NON-REVENUE RECEIPTS	70,311.07	-
General: 01 9000 - Non-Program Receipts	-	70,311.07
General: 57 9000 - NON-PROGRAM RECEIPTS	28.72	-
General: 01 1100 610 000 - SUPPLIES	-	28.72
✔ **Net income effect: 0**	**Dr: 70,339.79**	**Cr: 70,339.79**

Adjustment 9

Notes: To reclassify receipts in the nutrition fund.

Adjusting

Account	Debits	Credits
Nutrition: 06 1611 - DAILY SALES-SCHOOL LUNCH	19,600.00	-
Nutrition: 06 1612 - SCHOOL BREAKFAST PROGRAM	-	5,000.00
Nutrition: 06 1620 - DAILY SALES-NONREIMBURS PROG	-	14,600.00
✔ **Net income effect: 0**	**Dr: 19,600.00**	**Cr: 19,600.00**

Adjustment 10

Notes: To correct reimbursement from the Activities fund to the General Fund.

Adjusting

Account	Debits	Credits
General: 01 1990 - OTHER LOCAL RECEIPTS	14,804.00	-
General: 01 101 - CASH	-	14,804.00
✔ **Net income effect: (14,804)**	**Dr: 14,804.00**	**Cr: 14,804.00**

Adjustment 11

Notes: To correct receipt that was double posted.

Adjusting

Account	Debits	Credits
General: 01 104 - HORDVILLE MM	-	23,919.00
General: 01 3131 - RELIEF TO PROPERTY TAXPAYE	23,919.00	-
✔ **Net income effect: (23,919)**	**Dr: 23,919.00**	**Cr: 23,919.00**

Adjustment 12

Notes: To correct outstanding deposits on the activities fund.

Adjusting

Account	Debits	Credits
Activities: 05 101 - CASH	14,946.00	-
Activities: 05 3200 890 450 - OTHER MISC EXPENSES	-	14,804.00
Activities: 05 3200 890 450 - OTHER MISC EXPENSES	-	142.00
✔ **Net income effect: 14,946**	**Dr: 14,946.00**	**Cr: 14,946.00**

Adjustment 13

Notes: To reclassify the transfer from the General Fund.

Adjusting

Account	Debits	Credits
Activities: 55 5200 - TRANSFERS	-	2,000.00
Activities: 55 3200 890 002 - SUPPLIES	2,000.00	-
✔ **Net income effect: 0**	**Dr: 2,000.00**	**Cr: 2,000.00**

Adjustment 14

Adjusting

Notes: To reclassify transfer to the depreciation fund.

Account	Debits	Credits
General: 01 8000 914 000 - TRANSFERS TO THE BOND FUND	-	115,000.00
General: 01 2900 739 000 - Other Equipment	115,000.00	-
✔ **Net income effect: 0**	**Dr: 115,000.00**	**Cr: 115,000.00**

Adjustment 15

Adjusting

Notes: To adjust the county treasurer balance.

Account	Debits	Credits
Building: 08 105 - COUNTY TREASURER	-	20,974.00
Building: 08 1510 - INTEREST ON INVESTMENTS	4,169.00	-
Building: 08 3180 - PRO-RATE MOTOR VEHICLE	16,602.00	-
Building: 08 3131 - PROPERTY TAX CREDIT	-	17,128.00
Building: 08 1125 - MOTOR VEHICLE TAXES	373.00	-
Building: 08 1120 - PUBLIC POWER DIST SALES TAX	1,050.00	-
Building: 08 1100 - TAXES	15,908.00	-
✔ **Net income effect: (20,974)**	**Dr: 38,102.00**	**Cr: 38,102.00**

Adjustment 16

Adjusting

Notes: To adjust the county treasurer balance.

Account	Debits	Credits
General: 01 105 - CO TREASURER BALANCE	-	541.00
General: 01 1120 - Public Power District Sales Tax	5,233.00	-
General: 01 1115 - CARLINE/AIRLINE TAXES	594.00	-
General: 01 1100 - LOCAL DISTRICT TAXES	-	5,286.00
✔ **Net income effect: (541)**	**Dr: 5,827.00**	**Cr: 5,827.00**

Adjustment 17

Adjusting

Notes: To correct reclassification of legal fees from 2310 to 2330.

Account	Debits	Credits
General: 01 2310 340 000 - PROFESSIONAL FEES	22,000.00	-
General: 01 2330 340 000 - PROFESSIONAL FEES	-	22,000.00
✔ **Net income effect: 0**	**Dr: 22,000.00**	**Cr: 22,000.00**

Adjustment 18

Adjusting

Notes: To reclassify activity posted in the elementary activities fund to valid codes.

Account	Debits	Credits
Activities: 55 1100 610 002 - SUPPLIES	-	3,476.25
Activities: 55 1630 - Revenue Special Function	-	51.25
Activities: 55 1790 - Activity Income	-	1,314.69
Activities: 55 2410 610 002 - SUPPLIES	-	206.46
Activities: 55 3200 610 002 - SUPPLIES	-	2,340.20
Activities: 55 3200 890 002 - SUPPLIES	7,578.71	-
Activities: 55 3535 610 002 - SUPPLIES	-	189.86
✔ **Net income effect: 0**	**Dr: 7,578.71**	**Cr: 7,578.71**

Adjustment 19

Notes: To reclassify 1% retirement.

Adjusting

Account	Debits	Credits
General: 01 1100 231 001 - RETIREMENT	-	33,800.00
General: 01 1100 231 002 - RETIREMENT	-	33,800.00
General: 01 1100 237 001 - Increased Retirement 1%	33,800.00	-
General: 01 1100 237 002 - Increased Retirement 1%	33,800.00	-
✔ **Net income effect: 0**	**Dr: 67,600.00**	**Cr: 67,600.00**

Adjustment 20

Notes: To reclassify refund from 3rd Millenium Overpayment

Adjusting

Account	Debits	Credits
General: 01 1980 - Refund of Prior Year's Expenditures	-	2,500.00
General: 01 2120 643 001 - WEB/CLOUD BASED SOFTWARE	2,500.00	-
✔ **Net income effect: 0**	**Dr: 2,500.00**	**Cr: 2,500.00**

Adjustment 21

Notes: To correct account balances with negative balances.

Adjusting

Account	Debits	Credits
General: 01 3100 110 000 - Kitchen Salaries	281.88	-
General: 01 3100 120 000 - Temporary non instructional	-	281.88
General: 01 2713 626 000 - GAS	154.54	-
General: 01 2712 626 000 - GAS	-	154.54
General: 56 1100 610 002 - SUPPLIES	-	12.00
General: 56 1190 610 002 - SUPPLIES	12.00	-
✔ **Net income effect: 0**	**Dr: 448.42**	**Cr: 448.42**

November 4, 2024

Jason Brown, Superintendent and Board of Education
High Plains Community Schools District No. 75
260 S. Pine Street
Polk, NE 68654

In planning and performing our audits of the financial statements of High Plains Community Schools District No. 75, Polk, Nebraska for the year ended August 31, 2024, in accordance with auditing standards generally accepted in the United States of America and the standards applicable for financial audits contained in *Government Auditing Standards*, issued by the Comptroller General of the United States, we considered High Plains Community Schools District No. 75, Polk, Nebraska's internal control over financial reporting (internal control) as a basis for designing auditing procedures that are appropriate in the circumstances for the purpose of expressing our opinion on the financial statements, but not for the purpose of expressing an opinion on the effectiveness of the District's internal control. Accordingly, we do not express an opinion on the effectiveness of the District's internal control.

However, during our audit, we became aware of several matters that are opportunities for strengthening internal controls and operating efficiency. The items below are our comments and suggestions regarding those matters. A separate report dated November 4, 2024, contains our communication on material weaknesses and significant deficiencies in the District's internal control. This letter does not affect our report dated November 4, 2024, on the financial statements of High Plains Community Schools District No. 75, Polk, Nebraska.

Signature Stamps

The Business Manager has access to the signature stamps of individuals authorized to sign District checks. We recommend that signature stamps be kept in the custody of the authorized signers. An unauthorized disbursement could be initiated as the same individual is responsible for general ledger functions and bank reconciliations.

Board Approval of Bills

Depreciation and Special Building Fund bills were not included in the bill list in the minutes for approval at the monthly meetings. All payments in the funds should be approved by the Board. If approved after the fact, this should be documented in the minutes. Prior to the Board approving payments, we recommend that a member of the Board review each claim to be paid. This review should include comparing the payee and check amount to supporting invoices. Checks that are not supported by detailed invoices or receipts should not be paid.

Debit Card

A debit card was used for expenditures in the Elementary Activities account during the fiscal year. We recommend a credit card be used in place of a debit card. Unlike credit cards, which offer a grace period for disputing charges, debit card transactions immediately impact the district's cash flow.

Invoice Support and Purchasing Practices

During testing, we noted that some disbursements did not have supporting receipts or invoices available. We recommend that receipts or invoices be maintained for each charge, including those on credit card statements, to ensure proper documentation and verification of expenses.

We also observed that Amazon purchases were made using multiple accounts and different credit cards. To streamline this process and enhance control, we recommend transitioning to an enterprise Amazon account that allows for approval workflows and the issuance of invoices directly to the District, instead of linking purchases to individual credit cards.

Additionally, some purchases were made prior to obtaining formal approval. To address this, we suggest utilizing the purchase order system within Software Unlimited or implementing a requisition system to track spending.

Activities Fund Deposits

Cash receipts from various school events (gate receipts) were supported by cash count sheets that document the amount of cash collected by the ticket takers or gate personnel and remitted to the office for processing and subsequent deposit. However, deposits are not consistently being taken to the bank. We recommend that all cash receipts be taken to the bank daily. In addition, cash count sheets should be compared to the bank statement to ensure that funds were deposited intact. This should be done by a person independent of the Activity Fund bookkeeper, who typically makes the actual bank deposit. Copies of cash count sheets should be provided directly to such individuals for follow-through. Such review should be documented and the superintendent should be informed if the prescribed procedures are not being followed or if differences are identified.

Bank Reconciliation Review

We recommend that the bank reconciliations be reviewed for accuracy and completeness monthly by the Superintendent and/or Board Treasurer. The review should include tests of mechanical accuracy and tracing of items on the reconciliation to the relevant source documents. The composition of unreconciled differences should be determined and followed up on, and any journal entries deemed necessary as a result be recorded. All bank accounts should be reconciled monthly and agree to the corresponding ledger. Further, reconciled bank balances should be included in the board report and presented as part of the minutes.

Payroll

During our testing, we noted that no one was reviewing the direct deposit listing when approving payroll. Since one person processes payroll, a second person should be reviewing this report for accuracy. We

recommend that someone independent of the payroll process review these reports to ensure that payroll is being processed correctly. Additionally, we recommend that the Business Manager compare the current month's payroll to the prior month's payroll and document explanations for any significant changes. This comparison should identify and explain variations due to new hires, terminations, pay rate changes, or other relevant factors. We further suggest that the superintendent review this comparative analysis to ensure accuracy and accountability in the payroll process. Documenting these reviews can provide an added layer of oversight and contribute to the integrity of the payroll function.

District Response

The District and Board of Education appreciate the recommendations provided and are committed to enhancing internal controls and operational practices. Steps will be taken to ensure proper documentation, approval processes, and oversight are in place, including improvements to payroll review, credit card purchase documentation, and the use of enterprise solutions for better financial management. We will continue to evaluate and strengthen internal controls to align with best practices and maintain financial transparency.

We will review the status of these comments during our next audit engagement. We have already discussed many of these comments and suggestions with various District personnel, and we will be pleased to discuss them in further detail at your convenience, to perform any additional study of these matters, or to assist you in implementing the recommendations.

This communication is intended solely for the information and use of management, the Board of Education, others within the District, the State of Nebraska Auditor of Public Accounts, and the Nebraska Department of Education, and is not intended to be, and should not be, used by anyone other than these specified parties.

Yours truly,

ABBY JANZING, CPA
For the Firm

e-mail: abby@forward-cpa.com

2.12. Review, discuss, and take all necessary action on bids for a freezer for the kitchen in Polk
A motion to approve the bid from Central NE Refrigeration in the amount of $11,237.50 True for a new stand up freezer for the kitchen at Polk Passed with a motion by Nathan Spurling and a second by Terry Carlstrom.
Terry Carlstrom: Yea, Erin Meyer: Yea, Megan Pike: Yea, Nathan Spurling: Yea, Kraig Urkoski: Yea, Shane Van Pelt: Yea

Central Nebraska Refrigeration
1511 N Lincoln Ave
York NE 68467
Phone: 402-362-7070
Email: info@chill-ne.com

Central Nebraska Refrigeration

Estimate

Client

Stan
HIGH PLAINS COMMUNITY SCHOOL
Mike 402-363-8147
402-765-2271

Billing Information
260 South Pine
Polk, NE 68654

Service Address
High Plains Community School
260 South Pine
Polk, NE 68654

Best

Notes

Bid for removal and replacement of 3 door freezer

To include
Removal and disposal of old freezer
Delivery, installation, and start up of new freezer

Not included
Electrical
Tax if applicable

$11237.50
True 3 door, solid door 115 volt reach in freezer
Manufacturer's 7 year compressor, parts, and labor warranty

$10121.43
Everest 3 door, solid door 115 volt reach in freezer
Manufacturer's 3 year parts and labor warranty
Electrical components 5 year parts only warranty
Compressor 10 year part only warranty

For any questions or concerns please contact
Matt Coble or Jason Naber
Central Nebraska Refrigeration
402-362-7070

12/04/2024
Bid void after 30 days

Description Of Service	Quantity	Unit Price	Taxed	Amount
			Sub Total	$0.00
			Tax Amount (7.5%)	$0.00
			Total	$0.00

Purchase Agreement

11/21/2024

To:
High Plains School-Clarks
Penny Bengston
205 W Pearl St.
Clarks, NE 68628
308-548-2216 (Contact)

Project:
High Plains School-Clarks Non Food

From:
Buller Fixture
Randy Kratochvil
401 West 4th Street
Kearney, NE 68848
800-652-0010 EXT. 7241
FAX (308) 234-4372

Customer 201427

Job Reference Number: 16423

Item	Qty	Description	Sell	Sell Total
1	1 ea	**REACH-IN FREEZER** Everest Refrigeration Model No. EBF3 Reach-In Freezer, three-section, 74-3/4"W, 71.0 cu. ft. capacity, self-contained bottom mounted refrigeration, (3) full-height solid hinged self-closing doors (locking), (9) epoxy coated wire shelves, height adjustable clips, digital controls with LED display, auto defrost, LED interior lighting, stainless steel interior, stainless steel front & sides, galvanized steel top, bottom & rear, (3) leg stabilizers, (6) 5" swivel casters (3 locking), (2) 1/2 HP, 115v/60/1-ph, 12.0 amps, cord, NEMA 5-20P, NSF, cETLus, ETL-Sanitation	$6,950.00	$6,950.00
	1 ea	Parts and labor: 3 years from ship date		
	1 ea	Electrical components: 5 years from ship date		
	1 ea	Compressor: 10 years from ship date		
	1 ea	Door hinged on right & left, standard		
	1 ea	CASA5-02 5" Overall Height Casters Set of 6, (front 3 locking), standard		
		Delivered Price with Lift Gate to site by Common Carrier. **Sales Tax to be added at the time of invoicing if applicable.** **Uncrating and Installation are NOT included.**		
			ITEM TOTAL:	**$6,950.00**

Initial: _____

Item	Qty	Description	Sell	Sell Total
2	1 ea	**REACH-IN FREEZER**	$9,950.00	$9,950.00
		True Mfg. - General Foodservice Model No. TS-72F-HC Freezer, reach-in, three-section, -10°F, (3) stainless steel doors, (9) gray PVC coated adjustable wire shelves, LED interior lighting, stainless steel front/sides, stainless steel interior, 4" castors, R290 Hydrocarbon refrigerant, 3/4 HP, 115v/60/1-ph, 14.0 amps, NEMA 5-20P, cULus, UL EPH Classified, Made in USA		
	1 ea	7 year compressor warranty, 7 years parts warranty, 7 year labor warranty, standard. Visit www.truemfg.com for specifics.		
	1 ea	Self-contained refrigeration standard		
	1 ea	Left door hinged left, center & right doors hinged right, standard		
	1 ea	4" stem castors, standard (adds 5" to OA height)		
		Delivered Price with Lift Gate to site by Common Carrier. **Sales Tax to be added at the time of invoicing if applicable.** **Uncrating and Installation are NOT included.**		
			ITEM TOTAL:	**$9,950.00**
3	1 ea	**REACH-IN FREEZER**	$5,295.00	$5,295.00
		Atosa USA, Inc. Model No. MBF8504GR Atosa Freezer, reach-in, three-section, 81-9/10"W x 31-7/10"D x 83-1/10"H, bottom-mount self-contained refrigeration, 71.0 cu. ft., (3) locking hinged solid doors, digital temperature control, -8° to 0°F temperature range, (9) adjustable shelves, interior LED lighting, automatic evaporation, electric defrost, stainless steel interior & exterior, galvanized steel back, 4" casters, R290 Hydrocarbon refrigerant, 1 HP, 115/208-230v/60/1-ph, 5.5 amps, cord with NEMA L14-20P, cETLus, ETL-Sanitation		
	1 ea	2 year labor & parts warranty, 5 years warranty on compressor (continental USA only)		
	1 ea	Extended warranty to a 3 year parts & labor warranty with 5 year compressor part warranty (continental USA only) (NET)	$195.00	$195.00
		Delivered Price with Lift Gate to site by Common Carrier. **Sales Tax to be added at the time of invoicing if applicable.** **Uncrating and Installation are NOT included.**		
			ITEM TOTAL:	**$5,490.00**
			Merchandise	$22,390.00
			Total	$22,390.00

All material is guaranteed to be specified and the above work to be performed in accordance with the drawings and specifications submitted for above work and completed in a substantial workmanlike manner.

Prices DO NOT include inside delivery, un-crating, assembly, setting in place, mechanical, or electrical connections unless otherwise noted in the above purchase agreement.

Initial: _____

_____ Buller/Sunflower requires a 30% deposit on all special order equipment before the order is placed.
_____ Buller/Sunflower requires a 50% deposit on all custom special-order equipment before the order is placed.

Direct Ship Items: Please note it is the responsibility of the customer to file all freight claims directly with the freight company. Buller/Sunflower will not file any direct shipment claims with the freight companies on direct shipments. Please check all items thoroughly at the time of delivery and address any issues with the carrier at the time of delivery. We strongly suggest that on direct shipments that boxes are opened and inspected thoroughly at time of delivery before the transporter leaves the job site as concealed damage also needs to be reported directly to the shipper. All freight companies have a window of time to report concealed damage otherwise they are not responsible, and neither is Buller/Sunflower.

Buller/Sunflower payment terms for all special or custom order equipment is 7 days from date of invoice, or terms currently established and set up for specific customer.

Buller/Sunflower may file a UCC1 form with the state on all equipment purchased over $1000.00

_____ If this is a Proposal for an Exhaust System, the customer must meet all NFPA 96 Exhaust Hood Codes &/oral Local & State Codes approved by Local Fire Marshall. If not, all Codes are met Buller/Sunflower cannot and will not install any of the food service equipment that is to be located under this exhaust system.

Any alterations or deviation from the above specifications involving extra costs will be executed upon written orders and will become an extra charge over and above the estimate. All agreements are contingent upon strikes, accidents, or delays beyond our control. Owners to carry fire, tornado, and other necessary insurance upon above work. Workman's compensation and public liability insurance on above work to be taken out by:
_____

Respectfully Submitted_____
Buller Fixture Co/Sunflower Restaurant Supply Co

ACCEPTANCE OF PROPOSAL- the above prices, specifications and conditions are satisfactory and are hereby accepted. You are authorized to do the work as specified. Payment will be made as outlined. Remainder payment due within terms upon delivery.

Company:_____

Date:_____

Signature:_____

Randy Kratochvil
Equipment Sales Specialist
Buller Fixture Company
Phone: 800-652-0010 Ext 7241
Fax: 308-234-4372
randy.kratochvil@bullerfixture.com

Initial: _____

Acceptance: _____ Date: _____

Printed Name: _____

Project Grand Total: $22,390.00

BOTTOM MOUNT REACH-IN FREEZER
BOTTOM MOUNT CONDENSING UNIT

EBF3 EB Series

3 YEARS PARTS & LABOR
5 YEARS ELECTRICAL
10 YEARS COMPRESSOR
WARRANTY

Refrigeration System
· Bottom mounted, self-contained and fully detachable Blizzard R290 condensing unit uses environmentally friendly, EPA-compliant R290 refrigerant with zero (0) Ozone Depletion Potential (ODP) and three (3) Global Warming Potential (GWP). Blizzard R290 is easily replaceable and requires no on-site brazing.
· Electronically commutated (ECM) fan motors achieve rapid cooling with less energy consumption.
· Full-length air duct and airflow guard ensure optimal cold air circulation.
· Air circulation guard keeps floor vents from obstruction.
· Time-initiated and temperature-terminated auto defrost cycle for seamless operation.
· Large capacity, corrosion-resistant condenser and evaporator coils.
· Self-maintaining, energy-efficient condensate drain pan requires no external drains or electric heaters.
· High performance, auto-reverse condenser fan motor supports compressor ventilation and condenser coil cleaning.
· Pressure relief devices allow rapid cabinet re-entry.
· Pre-wired and ready to plug, 115V/60Hz/1Ph, NEMA 5-15P.

Cabinet Construction
· Heavy duty stainless steel interior / exterior with rounded corners for a hazard-free workspace.
· Open spaced interior with no walls between compartments.
· Galvanized steel top, bottom and rear.
· 2.5" thick high density polyurethane insulation.
· Deeper cabinet interior for more storage options.
· Six 5" swivel casters with locks on front set. Leg stabilizers standard.

Lighting
· Energy efficient silicone coated and shatter-proof LED lighting provides bright, high color illumination with low heat output.

Doors
· Heavy duty stainless steel interior / exterior.
· 2.5" thick high density polyurethane insulation.
· Frame heaters prevent exterior moisture build up.
· Self-closing with adjustable torsion system for a positive seal.
· Snap-in magnetic door gasket make cleaning and replacement an easy process.
· High strength, recessed door handles.
· Pre-installed door locks keep your items safe from theft.
· Field reversible.

Shelving
· Three epoxy coated, steel wire shelves per section.
· Height adjustable stainless steel clips.

Temperature Control
· Multi-function digital controller with easy to read LED display.
· Factory preset temperature, -4°F. Temperature setting range from -10°F to 54°F.
· R290 models include audible overheat protection alarm for compressor and condenser coil.

Options
· Additional shelving.
· 3" swivel casters with locks.
· 3.5" – 6" height-adjustable and interchangeable legs.
· Left hinged door.
· Mounting rack assembly for standard full-size sheet pans.

Type	Doors	Capacity Cu. Ft.	Shelves	Refrigerant	HP	Power V-Hz-Ph	Amps	Crated Weight	Exterior Dimensions		
									L	D	H*
FRZ	3	71	9	R-290	3/4 x 2	115-60-1	12	680 lbs	74.75"	33.125"	77"

(†)Based on evaporating temperature of 23°F (-5°C) & condensing temperature of 131°F (55°C). (⚑) Product capacity is calculated based on standard industry figures. (✻) Reference plan view for clarification on caster/unit height. If dimensions and capacity are critical, please contact Everest Refrigeration. Blizzard R290 replacement is at the sole discretion of Everest Refrigeration. Specifications subject to change without notice.

VER. 10/23/2024 201 W. Artesia Blvd., Compton, CA 90220 T. (310) 323-6586 F. (310) 323-7524

BOTTOM MOUNT REACH-IN FREEZER
BOTTOM MOUNT CONDENSING UNIT

EBF3 EB Series

DIMENSIONAL DATA

External Dims.	L	74.75 in.
	D	33.125 in.
	H*	77 in.
Crated Weight		680 lbs.
Doors/Drawers/Lids		3
Max Weight Support		-

STORAGE DATA

Net Capacity Cu. Ft. ⚑	71
Shelves	9
Barrels	-
20 oz. Bottles	-
12 oz. Bottles	-
12 oz. Cans	-
8" Mugs	-
# of Pans (Top)	-
# of Pans (Drawer)	-
Dividers	-
Trays	-

ELECTRICAL DATA

Voltage	115-60-1
Full Load Amperage	12A
Feed Wires w/ Ground	3
Cord Length	9ft
NEMA Plug Type	NEMA 5-20P

REFRIGERATION DATA

Compressor	Bottom
Refrigerant	R-290
Compressor HP	3/4 x 2
BTU/HR†	1670 x 2

KEY

D	Door	R	Refrigerator
L	Lid	REF	Refrigerator
H	Half Door	F	Freezer
FD	Full Door	FRZ	Freezer
SD	Solid Door	DUAL	REF/FRZ Combo
GD	Glass Door	DR	Drawer

	Elevation	Right	Plan	3D	Back
KCL					

PLAN VIEW

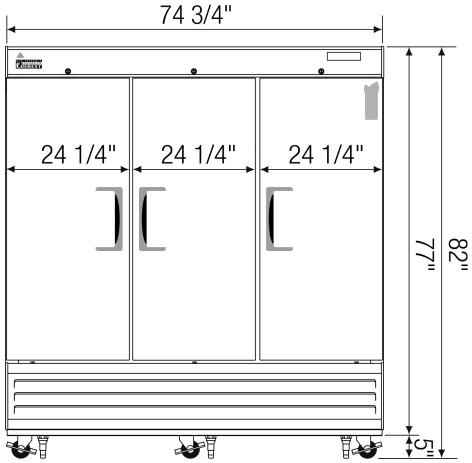

FRONT

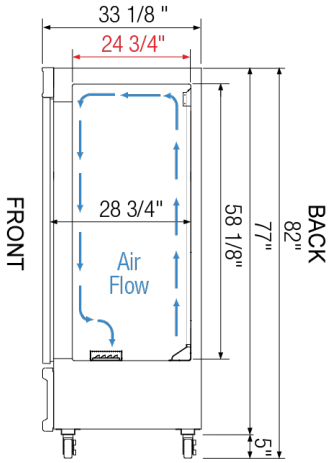

SIDE

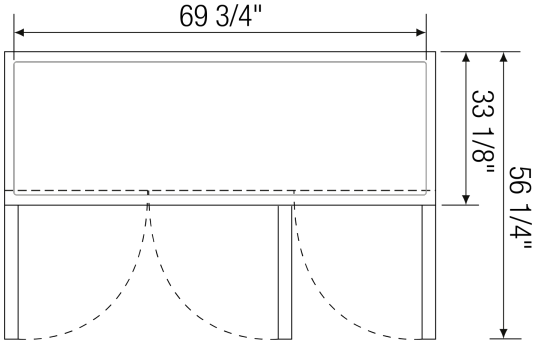

TOP

ACCESSORIES & OPTIONS

- ☐ Additional Shelving - Contact Everest Refrigeration for more information.
- ☐ AJL03-01 - Interchangeable Leg for Caster (Optional)
- ☐ CASA3-02 - 3" Overall Height Caster Assembly - (3) Front (3) Rear
- ☐ Left Hinged Door - Contact Everest Refrigeration for more information.
- ☐ SMRA03-00* - Sheet Pan Mounting Rack Assembly

(†)Based on evaporating temperature of 23°F (-5°C) & condensing temperature of 131°F (55°C). (⚑) Product capacity is calculated based on standard industry figures. (*) Reference plan view for clarification on caster/unit height. If dimensions and capacity are critical, please contact Everest Refrigeration. Blizzard R290 replacement is at the sole discretion of Everest Refrigeration. Specifications subject to change without notice.

TRUE MANUFACTURING CO., INC.
U.S.A. FOODSERVICE DIVISION
2001 East Terra Lane • O'Fallon, Missouri 63366-4434 • (636)240-2400
Fax (636)272-2408 • Toll Free (800)325-6152 • Intl Fax# (001)636-272-7546
Parts Dept. (800)424-TRUE • Parts Dept. Fax# (636)272-9471 • www.truemfg.com

Project Name: _____
Location: _____
Item #: _____ *Qty:* _____
Model #: _____

AIA #
SIS #

Model:
TS-72F-HC

TS Series:
Reach-In Solid Swing Door Stainless Steel Freezer with Hydrocarbon Refrigerant

TS-72F-HC

- True's TS series is the choice for the exclusive stainless steel commercial application.
- Designed using the highest quality materials and components to provide the user with colder product temperatures, lower utility costs, exceptional food safety and the best value in today's food service marketplace.
- Factory engineered, self-contained, capillary tube system using environmentally friendly R290 hydro carbon refrigerant that has zero (0) ozone depletion potential (ODP), & three (3) global warming potential (GWP).
- High capacity, factory balanced refrigeration system that maintains -10°F (-23.3°C) temperatures. Ideal for both frozen foods and ice cream.
- Stainless steel interior and exterior front, sides and doors. The very finest stainless with higher tensile strength for fewer dents and scratches. Matching aluminum back.
- Adjustable, heavy duty PVC coated gray shelves.
- Positive seal self-closing doors. Lifetime guaranteed door hinges and torsion type closure system.
- Automatic defrost system time-initiated, temperature-terminated. Saves energy consumption and provides shortest possible defrost cycle.

Bottom mounted units feature:

- "No stoop" lower shelf.
- Storage on top of cabinet.
- Compressor performs in coolest, most grease free area of kitchen.
- Easily accessible condenser coil for cleaning.

ROUGH-IN DATA

Specifications subject to change without notice.
Chart dimensions rounded up to the nearest ⅛" (millimeters rounded up to next whole number).

Model	Doors	Shelves	Cabinet Dimensions (inches) (mm) W	D	H*	HP	Voltage	Amps	NEMA Config.	Cord Length (total ft.) (total m)	Crated Weight (lbs.) (kg)
TS-72F-HC	3	9	78⅜ 1985	29½ 750	78⅜ 1991	¾ N/A	115/60/1	14.0 N/A	5-20P	9 2.74	650 295

* Height does not include 5" (127 mm) for castors or 6" (153 mm) for optional legs.

MADE WITH INNOVATION IN THE USA · 7 YEAR COMPRESSOR WARRANTY USA and Canada · UL · natural refrigerant

6/20 Printed in U.S.A.

APPROVALS:

AVAILABLE AT:

Model:
TS-72F-HC

TS Series:
Reach-In Solid Swing Door Stainless Steel Freezer with Hydrocarbon Refrigerant

STANDARD FEATURES

DESIGN
- True's solid door reach-in's are designed with enduring quality that protects your long term investment.
- True's commitment to using the highest quality materials and oversized refrigeration systems provides the user with colder product temperatures, lower utility costs, exceptional food safety and the best value in today's food service marketplace.

REFRIGERATION SYSTEM
- Factory engineered, self-contained, capillary tube system using environmentally friendly R290 hydro carbon refrigerant that has zero (0) ozone depletion potential (ODP), & three (3) global warming potential (GWP).
- High capacity, factory balanced refrigeration system that maintains -10°F (-23.3°C) temperatures. Ideal for both frozen foods and ice cream.
- State of the art, electronically commutated evaporator and condenser fan motors. ECM motors operate at higher peak efficiencies and move a more consistent volume of air which produces less heat, reduces energy consumption and provides greater motor reliability.
- Bottom mounted condensing unit positioned for easy maintenance. Compressor runs in coolest and most grease free area of the kitchen. Allows for storage area on top of unit.
- Automatic defrost system time-initiated, temperature-terminated. Saves energy consumption and provides shortest possible defrost cycle.

CABINET CONSTRUCTION
- Exterior - Stainless steel doors, front and sides. Corrosion resistant GalFan coated steel back.
- Interior - Stainless steel liner and floor.
- Insulation - entire cabinet structure and solid doors are foamed-in-place using a high density, polyurethane insulation that has zero ozone depletion potential (ODP) and zero global warming potential (GWP).
- Welded, heavy duty steel frame rail, black powder coated for corrosion protection.
- Frame rail fitted with 4" (102 mm) diameter stem castors - locks provided on front set.

DOORS
- Stainless steel exterior and liners. Doors extend full width of cabinet shell. Door locks standard.
- Lifetime guaranteed recessed door handles. Each door fitted with 12" (305 mm) long recessed handle that is foamed-in-place with a sheet metal interlock to ensure permanent attachment.
- Positive seal self-closing doors. Lifetime guaranteed door hinges and torsion type closure system.
- Magnetic door gaskets of one piece construction, removable without tools for ease of cleaning.

SHELVING
- Nine (9) adjustable, heavy duty PVC coated gray wire shelves 24⅛"L x 22⅜"D (613 mm x 591 mm). Four (4) chrome plated shelf clips included per shelf.
- Aluminum shelf support pilasters. Shelves are adjustable on ½" (13 mm) increments.

LIGHTING
- LED Interior lighting - safety shielded. Lights activated by rocker switch mounted above doors.

MODEL FEATURES
- Evaporator is epoxy coated to eliminate the potential of corrosion.
- Exterior solar, digital temperature display.
- Rear airflow guards prevent product from blocking optimal airflow.
- NSF/ANSI Standard 7 compliant for open food product.

ELECTRICAL
- Unit completely pre-wired at factory and ready for final connection to a 115/60/1 phase, 20 amp dedicated outlet.
- Unit utilizes a dual compressor system rated at ¾ HP each.
- Cord and plug set included.

115/60/1
NEMA-5-20R

OPTIONAL FEATURES/ACCESSORIES
Upcharge and lead times may apply.
- ❑ 6" (153 mm) standard legs.
- ❑ 6" (153 mm) seismic/flanged legs.
- ❑ Alternate door hinging (factory installed).
- ❑ Novelty baskets.
- ❑ Additional shelves.
- ❑ Half door bun tray racks. Each holds up to eleven 18"L x 26"D (458 mm x 661 mm) sheet pans (sold separately) (airflow guards need to be removed).
- ❑ Full door bun tray racks. Each holds up to twenty-two 18"L x 26"D (458 mm x 661 mm) sheet pans (sold separately) (airflow guards need to be removed).

PLAN VIEW

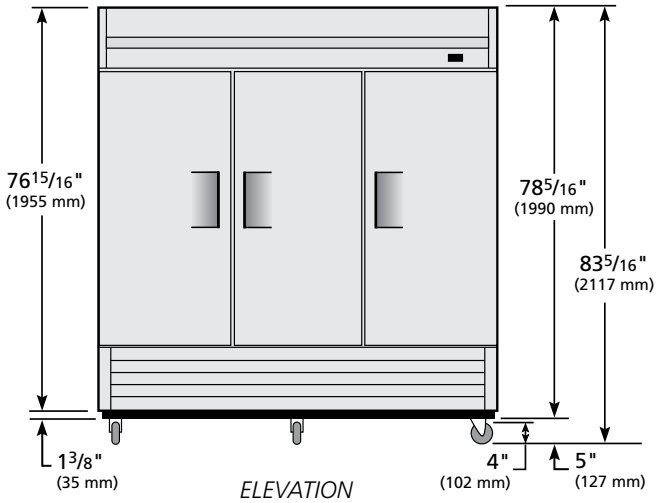

ELEVATION

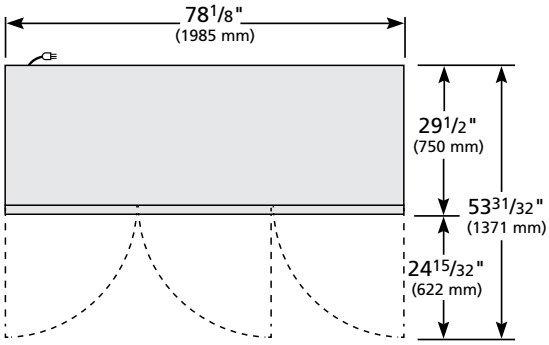

PLAN VIEW

3 YEAR PARTS + LABOR
7 YEAR COMPRESSOR
WARRANTY
(U.S.A. and Canada only)

METRIC DIMENSIONS ROUNDED UP TO THE NEAREST WHOLE MILLIMETER

SPECIFICATIONS SUBJECT TO CHANGE WITHOUT NOTICE

Model	Elevation	Right	Plan	3D	Back
TS-72F-HC	TFEY01E	TFEY01S	TFEY01P	TFEY013	

TRUE MANUFACTURING CO., INC.
2001 East Terra Lane • O'Fallon, Missouri 63366-4434 • (636)240-2400 • Fax (636)272-2408 • Toll Free (800)325-6152 • Intl. Fax# (001)636-272-7546 • www.truemfg.com

"WE MAKE THE KITCHEN BETTER!"
Toll Free: 855-855-0399 Email: info@atosausa.com
www.atosa.com | www.atosausa.com
California, Colorado, Florida, Georgia, Illinois,
New Jersey, Ohio, Texas, Washington

MODELS:

MBF8501GR/ MBF8501GRL / MBF8502GR / MBF8503GR / MBF8504GR

Bottom Mount Reach-In Freezers

MBF8501GR

MBF8502GR

MBF8503GR

MBF8504GR

Standard Features

- Bottom mount compressor units with environmentally friendly R290 refrigerant
- Stainless steel exterior & interior
- Electronic temperature controller
- Maintains temperatures between -8°F – 0°F
- LED interior light(s)
- Recessed door handle(s)
- Door lock(s) standard
- Magnetic door gasket(s) standard for positive door seal
- Pre-installed casters
- Three(3) pre-installed shelves per section
- Down duct refrigeration to ensure even distribution of air

Optional Accessories

- Extra shelves – includes 4 shelf clips per shelf
  MBF8501GR shelf part #: W0402393
  MBF8503GR shelf part #: W0402387
  MBF8504GR shelf part #: W0402387 left/right shelf, part #: W0402388 middle shelf

ENERGY STAR MBF8503GR

For the best results of food preservation we recommend setting your freezer between -8 °F to 0 °F

1. Don't forget to leave the unit some room to breathe!
2. Please clean the condenser frequently to give the unit more fresh air.

2 YEAR PARTS AND LABOR WARRANTY (US ONLY)
5 YEAR COMPRESSOR PART WARRANTY (US ONLY)

For confirmation and updates on the latest energy star models, please visit energystar.gov

"WE MAKE THE KITCHEN BETTER!"
Toll Free: 855-855-0399 Email: info@atosausa.com
www.atosa.com | www.atosausa.com
California, Colorado, Florida, Georgia, Illinois,
New Jersey, Ohio, Texas, Washington

SPECIFICATIONS

Models	Door	Capacity (Cu.Ft.)	Shelves	Casters (inch)	Amps (A)	Voltage (V/Hz/Ph)	HP	Refrigerant	Exterior Dimensions (inch)	Net Weight (lbs)	Gross Weight (lbs)
MBF8501GR	1	19.1	3	4	6.3	115/60/1	1/2	R290	$27\times31^{7/10}\times83^{1/10}$	265	298
MBF8502GR	2	28.5	6	4	8.6	115/60/1	3/4	R290	$39^{1/2}\times31^{7/10}\times83^{1/10}$	330	379
MBF8503GR	2	44.8	6	4	8.6	115/60/1	3/4	R290	$54^{2/5}\times31^{7/10}\times83^{1/10}$	410	465
MBF8504GR	3	68	9	4	6.2	208-230/115/60/1	1	R290	$81^{9/10}\times31^{7/10}\times83^{1/10}$	551	628

PLAN VIEW

MBF8501GR **MBF8502GR** **MBF8503GR** **MBF8504GR**

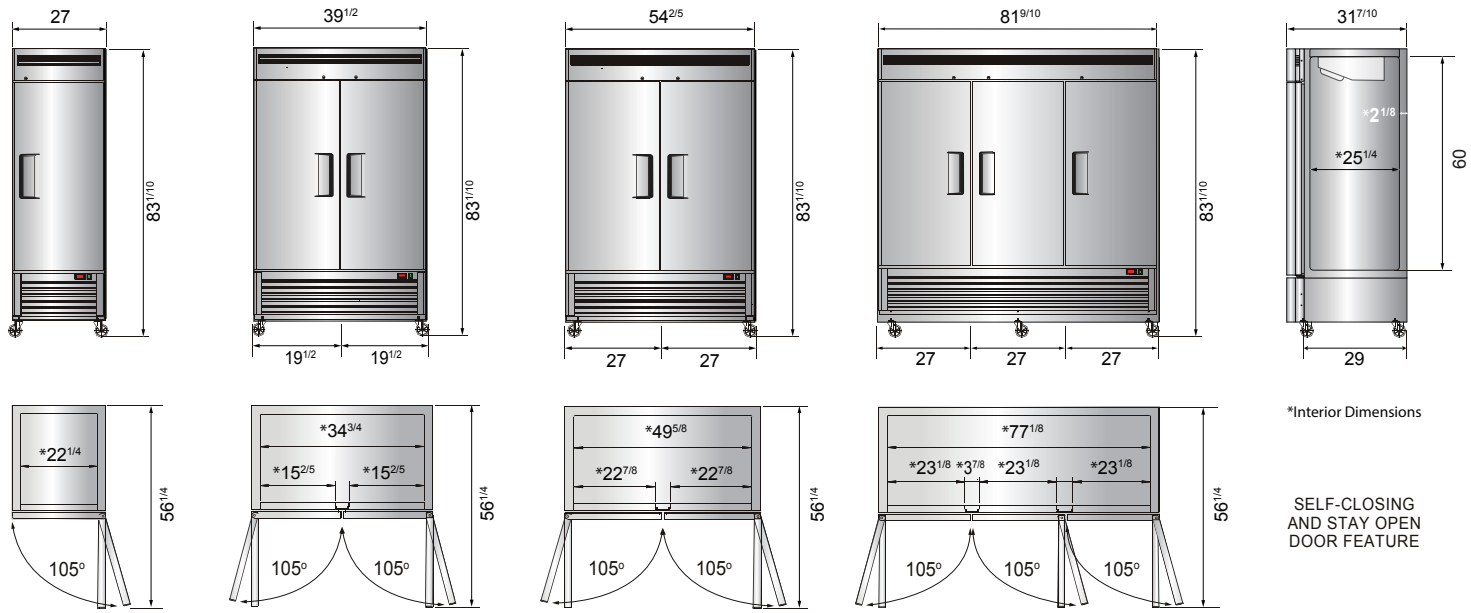

*Interior Dimensions

SELF-CLOSING AND STAY OPEN DOOR FEATURE

Casters | Epoxy shelves | Door lock | Down duct | Temperature control | MBF8504GR | MBF8501GR MBF8503GR

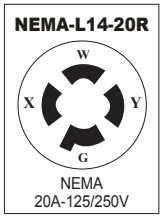

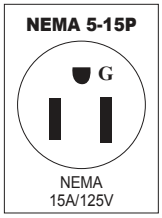

2.13. Review, discuss, and take all necessary action on mid-year policy updates.
A motion to approve the revision to HPC school board policies #2008 & #3004.1 Passed with a motion by Nathan Spurling and a second by Megan Pike.
Terry Carlstrom: Yea, Erin Meyer: Yea, Megan Pike: Yea, Nathan Spurling: Yea, Kraig Urkoski: Yea, Shane Van Pelt: Yea

3004.1
Fiscal Management for Purchasing and Procurement Using Federal Funds

I. Applicability of Policy

This policy applies only to non-construction related purchases undertaken with federal funds which are subject to the federal Uniform Grant Guidance (UGG) and other applicable federal law, including but not limited to the Education Department and General Administration Regulations (EDGAR) and the United States Department of Agriculture (USDA) regulations governing school food service programs. In the event this policy conflicts or is otherwise inconsistent with mandatory provisions of the UGG, EDGAR or other applicable federal law, the mandatory provisions of the laws shall control.

All other non-construction purchases will be governed by the Board's general purchasing policy, which can be found earlier in this subsection. In the event of a conflict between state and federal law, the more stringent requirement shall apply.

This procurement policy shall govern all purchasing activities that relate to any aspect of the National School Lunch and Breakfast Programs. The district's goal is to fully implement all required procurement rules, regulations and policies set forth in 2 CFR 200, 7 CFR parts 210, 3016 and 3019, and by the Nebraska Department of Education.

II. Procurement System

The District maintains the following purchasing procedures.

A. Responsibility for Purchasing

The authority to make purchases shall be governed by the District's purchasing policy, which can be found elsewhere in this section. Except as otherwise provided in the District's purchasing policy, the acquisition of services, equipment, and supplies shall be centralized in the administration office under the supervision of the superintendent of schools, who shall be responsible for developing and administering the purchasing program of the school district. Purchases or commitments of district funds that are not authorized by this policy will be the responsibility of the person making the commitment.

B. Methods of Purchasing

The type of purchase procedures required depends on the cost of the item(s) being purchased.

1. Purchases up to $10,000 (Micro-Purchases)

Micro-purchase means an individual procurement transaction for supplies or services using simplified acquisition procedures, the annual aggregate amount of which does not exceed $10,000. Micro-purchases may be made or awarded without soliciting competitive quotations, to the extent district staff determine that the cost of the purchase is reasonable. For purposes of this policy "reasonable" means the purchase is comparable to market prices for the geographic area.

To the extent practicable, the District distributes micro-purchases equitably among qualified suppliers. The District will follow its standard policy on purchasing, which can be found earlier in this subsection.

2. Purchases between $10,000 and $250,000 (Simplified Acquisition Procedures)

Simplified acquisitions are purchases that, in the aggregate amount, are more than $10,000 and less than $250,000 annually. For simplified acquisitions, price or rate quotes shall be obtained in advance from a reasonable number of qualified sources as detailed in the district's standard policies on purchasing and on bid letting and contracts, which can be found earlier in this subsection.

3. Purchases Over $250,000

a) Sealed Bids (Formal Advertising)

For purchases over $250,000, the district will generally follow the bidding process outlined in the board's policy on Bidding for Construction, Remodeling, Repair or Site Improvement. If sealed bids are not accepted for a purchase of over $250,000, the district will retain an explanation for that decision.

b) Contract/Price Analysis

The District performs a cost or price analysis in connection with every procurement action in excess of $250,000, including contract modifications. The district will make an independent estimate of costs prior to receiving bids or proposals.

4. **Noncompetitive Proposals (Sole Sourcing)**

a) Procurement by noncompetitive proposals is procurement through solicitation of a proposal from only one source and may be used only when one or more of the following circumstances apply:

1) The procurement transaction can only be fulfilled by a single source;

2) The public exigency or emergency for the requirement will not permit a delay resulting from providing public notice of a competitive solicitation;

3) The federal awarding agency or pass-through entity expressly authorizes written approval of noncompetitive proposals in response to a written request from the District; or

4) After solicitation of a number of sources, competition is determined inadequate.

b) Noncompetitive proposals may only be solicited with the approval of the superintendent or the board. Sufficient and appropriate documentation that justifies the sole sourcing decision must be maintained by the superintendent or designee.

c) A cost or price analysis will be performed for noncompetitive proposals when the price exceeds $250,000.

5. **Competitive Proposals.**

a) The technique of competitive proposals is normally conducted with more than one source submitting an offer, and either a fixed price or cost-reimbursement type contract is awarded. It is generally used when conditions are not appropriate for the use of sealed bids. If this method is used, the following requirements apply:

1) Requests for proposals must be publicized and identify all evaluation factors and their relative importance. Any response to publicized requests for proposals must be considered;

2) Proposals must be solicited from an adequate number of qualified sources; and

3) Contracts must be awarded to the responsible firm whose proposal is most advantageous to the program, with price and other factors considered.

b) The District may use competitive proposal procedures for qualifications-based procurement of architectural/engineering (A/E) professional services whereby competitors' qualifications are evaluated and the most qualified competitor is selected, subject to negotiation of fair and reasonable compensation. The method, where price is not used as a selection factor, can only be used to procure A/E professional services. The method may not be used to purchase other services provided by A/E firms are a potential source to perform the proposed effort.

c) The District may select a proposal that offers the best value and that is based upon the proposer's responsiveness to the proposal, experience, reputation, staff qualifications, ability and capacity to carry on the work, price, honesty, integrity, skills, business judgment, financial stability, past performance, and other relevant factors. The evaluation may be conducted by the school board, a designated committee, or another designee of the school board.

C. Use of Purchase (Debit & Credit) Cards

District use of purchase cards is subject to the policy on purchase cards which can be found elsewhere in this subsection.

D. Federal Procurement System Standards

The district's procurement transactions will be conducted in a manner providing full and open competition consistent with 2 C.F.R §200.319.

The District will maintain and follow general procurement standards consistent with 2 C.F.R. §200.318.

E. Debarment and Suspension

The District awards contracts only to responsible contractors possessing the ability to perform successfully under the terms and conditions of a proposed procurement. Consideration will be given to such matters as contractor integrity, public policy compliance, proper classification of employees (see the Fair Labor Standards Act, 29 U.S.C. 201, chapter 8), record of past performance, and financial and technical resources when conducting a procurement transaction.

The District may not subcontract with or award subgrants to any person or company who is debarred or suspended. For all contracts over $25,000 the District verifies that the vendor with whom the District intends to do business with is not excluded or disqualified. 2 C.F.R. Part 200, Appendix II(1) and 2 C.F.R. §§ 180.220 and 180.300.

The District will verify debarment or suspension by revising the excluded parties list on SAM.gov, collecting a certification through the bidding process, and/or by including a debarment and suspension provision in the bid and contract documents. The Superintendent or his/her designee shall be responsible for such verification.

F. Settlements of Issues Arising Out of Procurements

The District alone is responsible, in accordance with good administrative practice and sound business judgment, for the settlement of all contractual and administrative issues arising out of procurements. These issues include, but are not limited to, source evaluation, protests, disputes, and claims. These standards do not relieve the District of any contractual responsibilities under its contracts. Violations of law will be referred to the local, state, or federal authority having proper jurisdiction.

III. Conflict of Interest and Code of Conduct

A. Board and staff member conflicts of interest are governed by the district's conflict of interest policies.

B. Purchases covered by this policy are subject to the following additional provisions.

1. Employees, officers, and agents engaged in the selection, award, and/or administration of district contracts which are prohibited from engaging in such actions if a real or apparent conflict of interest is present.

2. Such a conflict of interest would arise when the employee, officer, or agent, any member of his or her immediate family, his or her partner, or an organization which employs or is about to employ any of the parties indicated herein, has a financial or other interest in or a tangible personal benefit from a firm considered for a contract.

3. The board may determine at its discretion that a financial interest is not substantial enough to give rise to a conflict of interest.

C. Favors and Gifts

An employee, officer, agent, and board member of the District may neither solicit nor accept gratuities, favors, or anything of monetary value from contractors or parties to subcontracts, except that this provision does not prohibit the receipt of unsolicited items of nominal value. For purposes of this policy, "nominal value" means a fair market value of $25 or less.

D. Enforcement

Disciplinary Actions including, but not limited to, counseling, oral reprimand, written reprimand, suspensions without pay, or termination of employment, will be applied for violations of such standards by officers, employees, board members, or agents of the District.

IV. Property Management Systems

A. Property Classifications

1. Equipment means tangible personal property (including information technology systems) having a useful life of more than one year and a per-unit acquisition cost that equals or exceeds the lesser of the capitalization level established by the District for financial statement purposes, or $10,000.

2. Supplies means all tangible personal property other than those described in §200.33 Equipment. A computing device is a supply if the acquisition cost is less than the lesser of the

capitalization level established by the District for financial statement purposes or $105,000, regardless of the length of its useful life. 2 C.F.R. §200.94.

3. Computing Devices means machines that acquire, store, analyze, process, and publish data and other information electronically, including accessories (or "peripherals") for printing, transmitting and receiving, or storing electronic information. 2 C.F.R. §200.20.

4. Capital Assets means tangible or intangible assets used in operations having a useful life of more than one year which are capitalized in accordance with GAAP. Capital assets include:

   a) Land, buildings (facilities), equipment, and intellectual property (including software) whether acquired by purchase, construction, manufacture, lease-purchase, exchange, or through capital leases; and

   b) Additions, improvements, modifications, replacements, rearrangements, reinstallations, renovations or alterations to capital assets that materially increase their value or useful life (not ordinary repairs and maintenance). 2 C.F.R. §200.12.

B. Inventory Procedure

Newly purchased property shall be received and inspected by the staff member who ordered it to ensure that that it matches the purchase order, invoice, or contract and that it is in acceptable condition.

Equipment, Computing Devices, and Capital Assets must be tagged with an identification number, manufacturer, model, name of individual who tagged the item, and date tagged).

C. Inventory Records

For equipment, computing devices, and capital assets purchased with federal funds, the following information is maintained in the property management system:

1. Serial number;
2. District identification number;
3. Manufacturer;

4. Model;
5. Date tagged and individual who tagged it;
6. Source of funding for the property;
7. Who holds title;
8. Acquisition date and cost of the property;
9. Percentage of federal participation in the project costs for the federal award under which the property was acquired;
10. Location, use and condition of the property; and
11. Any ultimate disposition data including the date of disposal and sale price of the property.

The inventory list shall be adjusted by the superintendent of schools or his/her designee for property that is sold, lost, stolen, cannot be repaired, or that cannot be located.

D. Physical Inventory

1. A physical inventory of the property must be taken and the results reconciled with the property records at least once every two years.

2. The Superintendent or his/her designee will ensure that the physical inventory is performed. The physical inventory will generally occur during the months of June or July, but may be conducted during other time periods with the approval of the superintendent.

E. Maintenance

In accordance with 2 C.F.R. 313(d)(4), the District maintains adequate maintenance procedures to ensure that property is kept in good condition.

F. Lost or Stolen Items

The District maintains a control system that ensures adequate safeguards are in place to prevent loss, damage, or theft of the property. The District will notify the Federal agency or pass-through entity of any loss, damage, or theft of equipment that will have an impact on the program.

G. Use of Equipment

Equipment must be used in the program or project for which it was acquired as long as needed, whether or not the project or program continues to be supported by the federal award, and the District will not encumber the

property for any non-federal program use without prior approval of the federal awarding agency and the pass-through entity.

H. Disposal of Equipment

When it is determined that equipment acquired under a federal award is no longer needed for the original project or program or for other activities currently or previously supported by a federal awarding agency, the Superintendent or his/her designee will contact the awarding agency (or pass-through for a state-administered grant) for disposition instructions.

If the item has a current fair market value of $10,000 or less, it may be retained, sold, or otherwise disposed of with no further obligation to the federal awarding agency or pass-through entity. The Superintendent or his/her designee will utilize sales procedures which ensure the highest possible return on the disposal of the equipment.

I. Equipment Retention

When included in the terms and conditions of the Federal award, the Federal agency may permit the recipient to retain equipment, or authorize a pass-through entity to permit the recipient to retain equipment, with no further obligation to the Federal Government unless prohibited by Federal statute or regulation.

J. Equipment and Capital Expenditures

All equipment and capital expenditures shall comply with the rules and requirements of 2 CFR 200.439.

K. Depreciation

All depreciation shall comply with the rules and requirements of 2 CFR 200.436.

L. Reporting and Recording Federal Property Interest

The district will comply with federal interest reporting and submit annual reports, if required, regarding a real property interest due to a renovation, major remodeling, construction, or real property project funded by federal grant funds.

V. Financial Management

A. Identification

The District will identify, in its accounts, all federal awards received and expended and the federal programs under which they were received. Federal program and award identification include, as applicable, the CFDA title and number, federal award identification number and year, name of the federal agency, and, if applicable, name of the pass-through entity.

B. Financial Reporting

The District will make an accurate, current, and complete disclosure of the financial results of each federal award or program in accordance with the financial reporting requirements set forth in the Education Department General Administrative Regulations (EDGAR).

C. Accounting Records

The District maintains records which adequately identify the source and application of funds provided for federally-assisted activities. These records must contain information pertaining to grant or subgrant awards, authorizations, obligations, unobligated balances, assets, expenditures, income and interest and be supported by source documentation.

D. Internal Controls

The Superintendent or his/her designee must maintain effective control and accountability for all funds, real and personal property, and other assets through board review and approval of claims, an annual audit of the district's finances pursuant to the applicable Nebraska Department of Education and federal rules and regulations, and comparison of expenditures and outlays to budgeted amounts. The District adequately safeguards all such property and assures that it is used solely for authorized purposes. The District takes reasonable cybersecurity and other measures to safeguard information including protected personally identifiable information.

E. Budget Control

Actual expenditures or outlays will be compared with budgeted amounts for each federal award at least annually and more often as required by law or deemed prudent by the board or administrative staff.

F. Payment Methods

The District will comply with applicable methods and procedures for payment that minimize the time elapsing between the transfer of funds and disbursement by the District, in accordance with the Cash Management Improvement Act at 31 CFR Part 205. Generally, the District receives payment from the Nebraska Department of Education on a reimbursement basis. 2 CFR § 200.305. However, if the District receives an advance in federal grant funds, the District will remit interest earned on the advanced payment quarterly to the federal agency. The District may retain interest amounts up to $500 per year for administrative expenses. 2 CFR § 200.305(b)(9).

Consistent with state and federal requirements, the District will maintain source documentation supporting the federal expenditures (invoices, time sheets, payroll stubs, etc.) and will make such documentation available for the Nebraska Department of Education to review upon request.

G. Allowability of Costs

Expenditures must be aligned with approved budgeted items. Any changes or variations from the state-approved budget and grant application need prior approval.

When determining how the District will spend its grant funds, the Superintendent or his/her designee will review the proposed cost to determine whether it is an allowable use of federal grant funds before obligating and spending those funds on the proposed good or service. All costs supported by federal education funds must meet the standards outlined in EDGAR, 2 CFR Part 3474 and 2 CFR Part. The Superintendent or his/her designee must consider these factors when making an allowability determination.

The Superintendent or his/her designee will consider Part 200's cost guidelines when federal grant funds are expended. The Superintendent or his/her designee will also consider whether all state - and District-level requirements and policies regarding expenditures have been followed.

H. Use of Program Income – Deduction, Addition, or Cost Sharing or Matching

The default method for the use of program income for the District is the deduction method. 2 C.F.R. § 200.307(e). Under the deduction method, program income is deducted from total allowable costs to determine the net allowable costs. Program income will only be used for current costs unless the District is otherwise directed by the federal awarding agency or pass-through entity. 2 C.F.R. § 200.307(e)(1). The District may also request prior approval from the federal awarding agency to use the addition method. Under

the addition method, program income may be added to the Federal award by the Federal agency and the non-Federal entity. The program income must then be used for the purposes and under the conditions of the Federal award. 2 C.F.R. § 200.307(e)(2). The District may also request prior approval from the federal awarding agency to use the cost sharing or matching method.

While the deduction method is the default method, the District always refers to the grant award notice prior to determining the appropriate use of program income.

I. Cost Sharing or Matching

For all Federal awards, any shared costs or matching funds and all contributions, including cash and third-party in-kind contributions, must be accepted as part of the non-Federal entity's cost sharing or matching when such contributions meet all of the following criteria:

(1) Are verifiable from the non-Federal entity's records;
(2) Are not included as contributions for any other Federal award;
(3) Are necessary and reasonable for accomplishment of project or program objectives;
(4) Are allowable under subpart E (Cost Principles) of this part;
(5) Are not paid by the Federal Government under another Federal award, except where the Federal statute authorizing a program specifically provides that Federal funds made available for such program can be applied to matching or cost sharing requirements of other Federal programs;
(6) Are provided for in the approved budget when required by the Federal awarding agency; and
(7) Conform to other provisions of this part, as applicable.

J. Documentation of Personnel Expenses

Records that reflect charges to federal awards for salaries and wages will comply with the rules and requirements of 2 CFR 200.430.

VI. Written Compensation Policies

A. Time and Effort Standards

All employees who are paid in full or in part with federal funds must keep specific documents to demonstrate the amount of time they spent on grant activities. This includes an employee whose salary is paid with state or local funds but is used to meet a required "match" in a federal program. These

documents, known as time and effort records, are maintained in order to charge the costs of personnel compensation to federal grants. Charges to federal awards for salaries and wages must be based on records that accurately reflect the work performed. These records must:

(1) Be supported by a system of internal controls which provides reasonable assurance that the charges are accurate, allowable, and properly allocated;
(2) Be incorporated into official records;
(3) Reasonably reflect total activity for which the employee is compensated, not exceeding 100% of compensated activities;
(4) Encompass both federally assisted and all other activities compensated by the District on an integrated basis;
(5) Comply with the established accounting policies and practices of the District and
(6) Support the distribution of the employee's salary or wages among specific activities or costs objectives.

B. Time and Effort Procedures

Time and effort procedures will follow and comply with 2 CFR 200.430(i).

C. Fringe Benefits

Except as provided otherwise by federal law, the costs of fringe benefits will be allowable provided that the benefits are reasonable and required by law, a district-employee agreement, or another policy of the District.

D. Leave

The cost of fringe benefits in the form of regular compensation paid to employees during periods of authorized absences from the job, such as for annual leave, family-related leave, sick leave, holidays, court leave, military leave, administrative leave, and other similar benefits, are allowable if they are provided under established written District leave policies.

E. Unexpected or Extraordinary Circumstances

In the event of a pandemic or other unexpected or extraordinary circumstance, the District may close school or individual buildings. In such case, the District may compensate federally funded or other employees during such closure to ensure the return of staff to employment after the closure as allowed by state or federal law.

F. Documentation for Personnel Expenses

Records that reflect charges to federal awards for salaries and wages will comply with the rules and requirements of 2 CFR 200.430.

VII. Other Contract Matters.

A. Required Terms

The non-Federal entity's contracts must contain the applicable provisions required by section 200.326 and described in Appendix II to Part 200—Contract Provisions for non-Federal Entity Contracts Under Federal Awards.

B. Contracting with Certain Vendors

Pursuant to the standards contained in 2 C.F.R. § 200.321, the District will take all necessary affirmative steps to assure that minority businesses, women's business enterprises, veteran-owned businesses, and labor surplus area firms are used when possible consistent with state law.

Buy American. The District participates in the National School Lunch Program and School Breakfast Program and is required to use the nonprofit food service funds, to the maximum extent practicable, to buy domestic commodities or products for Program meals. A "domestic commodity or product" is defined as one that is either produced in the U.S. or is processed in the U.S. substantially using agricultural commodities that are produced in the U.S. as provided in 7 CFR 210.21(d). The District may deviate from this general requirement only if:

- The product is not produced or manufactured in the U.S. in sufficient and reasonably available quantities of a satisfactory quality; or
- Competitive bids reveal the costs of a U.S. product are significantly higher than the non-domestic product.

C. Record Keeping

1. Record Retention

   a) The District maintains all records that fully show (1) the amount of funds under the grant or subgrant; (2) how the subgrantee uses those funds; (3) the total cost of each project; (4) the share of the total cost of each project provided from other sources; (5) other records to facilitate an effective audit; and (6) other records to show compliance with federal program requirements. 34 C.F.R.

§§ 76.730-.731 and §§ 75.730-.731. The District also maintains records of significant project experiences and results. 34 C.F.R. § 75.732. These records and accounts must be retained and made available for programmatic or financial audit.

b) The U.S. Department of Education is authorized to recover any federal funds misspent within 5 years before the receipt of a program determination letter. 34 C.F.R. § 81.31(c). Schedule 10 (Local School Districts) and Schedule 24 (Local Agencies General Records) of the Nebraska Records Management Division as approved by the Nebraska Secretary of State/State Records Administrator requires the District to maintain records regarding federal awards for a minimum of six (6) years. Consequently, the District shall retain records for a minimum of six (6) years from the date on which the final Financial Status Report is submitted, unless otherwise notified in writing to extend the retention period by the awarding agency, cognizant agency for audit, oversight agency for audit, or cognizant agency for indirect costs. However, if any litigation, claim, or audit is started before the expiration of the record retention period, the records will be retained until all litigation, claims, or audit findings involving the records have been resolved and final action taken. 2 C.F.R. § 200.333.

c) Records will be destroyed in compliance with Schedule 10, Schedule 24, and State law. This includes the completion of a Records Disposition Report.

2. Maintenance of Procurement Records

a) The District must maintain records sufficient to detail the history of all procurements. These records will include, but are not necessarily limited to the following: rationale for the method of procurement, selection of contract type, contractor selection or rejection, the basis for the contract price (including a cost or price analysis), and verification that the contractor is not suspended or debarred.

b) Retention of procurement records shall be in accordance with applicable law and Board policy.

D. Privacy

The District has protections in place to ensure that the personal information of both students and employees is protected. These include the use of passwords that are changed on a regular basis; staff training on the requirements of the Family Educational Rights and Privacy Act (FERPA) and State confidentiality requirements; and training on identifying whether an individual requesting access to records has the right to the documentation.

Adopted on: _____
Revised on: _____
Reviewed on: _____

NOTE TO BE DELETED: THIS POLICY IS FOR CLASS I AND II SCHOOL DISTRICTS THAT HAVE DECIDED TO ALLOW EMPLOYEES AND CONTRACTORS TO CARRY FIREARMS ON SCHOOL GROUNDS. IF YOU ARE A CLASS I OR II SCHOOL DISTRICT THAT HAS DECIDED NOT TO ALLOW ARMED EMPLOYEES AND CONTRACTORS, YOU SHOULD KEEP YOUR EXISTING POLICY 3060 IN PLACE AND MAKE NO CHANGES. IF YOU ARE A CLASS III OR LARGER SCHOOL DISTRICT, YOU CANNOT ALLOW THIS AND SHOULD KEEP YOUR EXISTING POLICY 3060 IN PLACE. THE CUTOFF FOR CLASS III IS A SCHOOL DISTRICT WITH A POPULATION OF 5,000 OR MORE.

3060
Firearms and Weapons for Non-Students

Weapons. No person may possess, handle, or transmit any weapon while on school grounds or at any school activity or event off school grounds except as permitted by this policy. ***Definition of Weapon.*** The term "weapon" means any object, device, instrument, material, or substance which is capable of causing injury in the manner it is used or intended to be used.

Firearms. No person may bring, possess, handle or transmit a firearm on school grounds, in a school owned vehicle, or at a school activity or event off school grounds, except as permitted by this policy. ***Definition of Firearm.*** The term "firearm, as defined in 18 U.S.C. 921, means any weapon (including a starter gun) which will or is designed to or may readily be converted to expel a projectile by the action of an explosive, the frame or receiver of any such weapon, any firearm muffler or firearm silencer, or any destructive device (excluding an antique firearm).

Exceptions Regarding Firearms. The prohibition against firearms does not apply to:

1. The issuance of firearms to or possession by members of the armed forces of the United States, active or reserve, National Guard of this State, or Reserve Officers' Training Corps or peace officers or other duly authorized law enforcement officers when on duty or training;

2. The possession of firearms by peace officers or other duly authorized law enforcement officers;

~~2.~~3. The carrying of firearms by qualified law enforcement officers or qualified retired law enforcement officers carrying pursuant to 18 U.S.C. 926B or 926C, respectively, as such sections existed on January 1, 2023

~~3.~~4. Firearms that may lawfully be possessed by a person who is receiving instruction at the school under the immediate supervision of an adult instructor;

~~4.~~5. Firearms which may lawfully be possessed by a person for the purpose of using them, with the approval of the school, in a historical reenactment, in a hunter education program, or as part of an honor guard;

~~5.~~6. Firearms contained within a private vehicle ***operated by a nonstudent adult*** that are not loaded ***and*** are enclosed in a case or are in a locked firearm rack that is on a motor vehicle; ~~or~~

7. A handgun carried as a concealed handgun by a nonstudent other than a minor or prohibited person in a vehicle or on his or her person while riding in or on a vehicle into or onto any parking area, which is open to the public and used by the school if, prior to exiting the vehicle, the handgun is locked inside the glove box, trunk, or other compartment of the vehicle, a storage box securely attached to the vehicle, or, if the vehicle is a motorcycle, a hardened compartment securely attached to the motorcycle while the vehicle is in or on such parking area~~.~~; or

~~6.~~8. Firearms carried by authorized security personnel who are employed by or contracted with the school district pursuant to this policy.

Authorized Security Personnel

The school district may employ or contract with authorized security personnel who may carry a firearm on school grounds, in a school-owned vehicle, or at a home school-sponsored activity or athletic event as provided in this policy. ***Authorized security personnel may not carry a firearm at away school activities or athletic events unless authorized to do so by the host school or agency.***

1. Personal Qualifications.

   A. Background Check. The individual must pass a comprehensive background check as arranged by the school district. The school district will determine if the person is authorized to provide services, in accordance with state, federal, and local policy.

B. Mental Health Evaluation. The individual will submit to a mental health evaluation with a mental health professional as arranged by the school district. The school district will review the evaluation and determine if, in its discretion, the individual is qualified to provide services.
C. Employee or Contractor. The individual with either be an existing employee of the district or shall enter into a written agreement to provide security services.
D. Letters of Recommendation. The individual shall submit at least three letters of recommendation. The Superintendent or designee shall contact the authors of the letters to verify their content and authenticity.
E. Concealed Carry Permit: The individual must possess a valid Nebraska Concealed Carry Permit.

2. Training. The individual must attend a minimum of twenty hours of training focused on school-based law enforcement, including, but not limited to, coursework focused on school law, student rights, understanding special needs students and students with disabilities, conflict de-escalation techniques, ethics for school resource officers, teenage brain development, adolescent behavior, implicit bias training, diversity and cultural awareness, trauma-informed responses, and preventing violence in school settings before providing any security services to the school district.

3. Appropriate Firearms and Ammunition. Authorized security personnel may only use a handgun that has been approved by the school board. Any ammunition must be recommended or approved by the firearm manufacturer.

4. Appropriate Use of Force. Although authorized security personnel are not law enforcement officers and do not have the authority to act in that capacity, they must know and understand the appropriate use of force. Authorized security personnel may take actions necessary to prevent or abate an active threat and temporarily detain an individual when they have reasonable cause to believe an individual has committed or is about to commit a forcible act of violence that could cause serious bodily injury or death. Authorized security personnel must understand deadly use of force as well as the potential of criminal and civil liability.

5. [OPTION 1 – OVERNIGHT STORAGE ALLOWED] Firearm Storage. Authorized security personnel may store firearms and ammunition on school grounds subject to the terms of this policy and a separate

Memorandum of Understanding.

A. The firearms and ammunition must be stored in a biometric fingerprint gun safe located in the _____.
B. One biometric fingerprint gun safe shall be installed by a qualified locksmith or other qualified professional installer. The safe shall be securely installed or otherwise bolted to the floor.
C. Only the authorized security personnel or other properly trained law enforcement officers will have biometric or other access to the safe.
D. The room in which the firearm and ammunition is stored shall be locked at all times with biometric access only.
E. The gun safe, firearms, and ammunition shall be the property of the authorized security personnel.
F. Only the authorized security personnel or other properly trained law enforcement officers may store guns or ammunition in the gun safe.
G. Only the authorized security personnel or other properly trained law enforcement officers may carry or use the guns and ammunition in stored in the gun safe.
H. The room in which the firearm, ammunition, and ~~is stored and the~~ safe are stored shall be monitored by school district video cameras.
I. Any firearms or ammunition to be stored in the ~~gun~~ safe will be transported at a time and in a concealed manner to minimize disruption.

6. [OPTION 2 – OVERNIGHT STORAGE NOT ALLOWED] Authorized security personnel may store firearms and ammunition on school grounds subject to the terms of this policy and a separate Memorandum of Understanding.

A. The firearms and ammunition must be stored in a biometric fingerprint gun safe located in the _____.
B. One biometric fingerprint gun safe shall be installed by a qualified locksmith or other qualified professional installer. The safe shall be securely installed or otherwise bolted to the floor.
C. Only the authorized security personnel or other properly trained law enforcement officers will have biometric or other access to the safe.
D. The room in which the firearm and ammunition is stored shall be locked at all times with biometric access only.
E. The gun safe, firearms, and ammunition shall be the property of

the authorized security personnel.

F. Only the authorized security personnel or other properly trained law enforcement officers may store guns or ammunition in the gun safe.

G. Only the authorized security personnel or other properly trained law enforcement officers may carry or use the guns and ammunition in stored in the gun safe.

H. The room in which the firearm, ammunition, and safe are ~~is~~ stored ~~and the safe~~ shall be monitored by school district video cameras.

I. Any firearms or ammunition to be stored in the ~~gun~~ safe will be transported at a time and in a concealed manner to minimize disruption.

J. ***The authorized security personnel must be physically present on school grounds when their firearm or ammunition is stored in the biometric safe.***

7. Memorandum of Understanding (MOU). The authorized security personnel will enter into an MOU with the school district to address the requirements of this policy as well as other appropriate matters.

8. Notification. The authorized security personnel must notify all local law enforcement agencies, the Nebraska State Patrol, and local fire and rescue personnel and first responders, and the regional emergency manager of their position at the school district.

Consequences. In the event a person violates this policy, the school may:

- Make a report to law enforcement;
- Ban any violator from school grounds, school vehicles, or school events for any time period it deems appropriate; and/or
- Take any other action allowed by law.

Adopted on: _____
Revised on: _____
Reviewed on: _____

2008
Meetings

The formation of policy is public business and will be conducted openly in accordance with the Nebraska Open Meetings Act.

1. Types of Meetings

   a. The board shall hold its regular meetings on or before the third Monday of each month.

   b. Special and emergency meetings may be called as provided by law.

   c. The board may schedule work sessions and retreats in order to provide board members and administrators with the opportunity to plan, research, and engage in discussion.

2. Notice

The board shall give reasonable advance publicized notice of the time and place of each of its meetings, which generally will be 48 hours or more in advance of the meeting. Such notice shall be transmitted to all members of the board and to the public.

Publication Procedure if the Newspaper Will Be Finalized for Printing Prior to the Time and Date of the Meeting. Notice of regular and special meetings shall be (1) published in a newspaper of general circulation within the district that is finalized for printing prior to the time and date of the meeting, (2) posting on the newspaper's website, if available, and (3) posting on a statewide website established and maintained as a repository for such notices by a majority of Nebraska newspapers.~~and, if available, on the newspaper's website.~~

Publication Procedure if the Newspaper Will Not Be Finalized for Printing Prior to the Time and Date of the Meeting. Notice of regular and special meetings shall be (1) posting on the newspaper's website, if available, and (2) posting on a statewide website established and maintained as a repository for such notices by a majority of Nebraska newspapers if no edition of a newspaper of general circulation within the school district's jurisdiction is to be finalized for printing prior to the time and date of the meeting.

Newspapers of general circulation in the district include~~, but are not~~

~~necessarily limited to,~~ the _____ ~~or the Omaha World-Herald~~. Such notice shall contain a statement that the agenda shall be readily available for public inspection at the administration office of the school during the normal business hours. In addition, the superintendent is authorized, but not required, to publish the notice of any meeting on the school district's website, posting in three prominent places within the school district, or by any other appropriate method designated by the board.

In case of refusal, neglect, or inability of the newspaper to timely publish the notice, the school district will (1) post the notice on its website, if available, ~~and~~ (2) submit a post on a statewide website established and maintained as a repository for such notices by a majority of Nebraska newspapers, and (3) post the notice in a conspicuous public place in the school district's jurisdiction. The school district will keep a written record of the posting.

When it is necessary to hold an emergency meeting without reasonable advance public notice, the nature of the emergency shall be stated in the minutes of the meeting, and any formal action taken in such meeting shall pertain only to the emergency. Complete minutes of such emergency meetings specifying the nature of the emergency and any formal action taken at the meeting shall be made available to the public no later than the end of the next regular business day.

3. Weather Delays

In the event of inclement weather which makes it dangerous or unreasonable for board members or members of the public to attend a meeting for which notice has already been given, such meeting may be postponed by the board president. The board will communicate the delay to members of the public by posting it on the district's website and by following the same communication protocol that the district follows when student attendance at school is called off due to inclement weather. When possible, the board president and superintendent will attempt to communicate the information to local media members and business owners to assist in notifying the public of the delay. Notice of the date, time, and location of the postponed meeting will be advertised as required in the "Notice" section above.

4. Minutes

a. The board shall keep minutes of all meetings showing the time, place, members present and absent, the method(s) and date(s) of the meeting notice, and the substance of all matters discussed.

b. Any action taken on any question or motion duly moved and seconded shall be by roll call vote of the board in open session, and the record shall state how each member voted, or if the member was absent or not voting.

c. The minutes of all meetings and evidence and documentation received or disclosed in open session shall be public record and shall be published on the school district's website within ten working days of the last meeting or prior to the next convened meeting, whichever occurs earlier. The minutes shall be available on the website for at least six months.

Adopted on: _____
Revised on: _____
Reviewed on: _____

Karen A. Haase NE, SD, IA, WY
Steve Williams NE, SD
Bobby Truhe NE, SD
Coady H. Pruett NE, SD, CO
Jordan Johnson NE, SD, WY

Tyler Coverdale SD
Sara Hento SD, NE
Amanda Dabney NE
Shari Russell, Paralegal

M E M O R A N D U M

To: KSB Policy Service Subscribers

From: KSB School Law

Date: December 2, 2024

Re: 2024 Midyear Policy Updates

No one likes midyear policy updates, but thanks to the Unicameral and federal programs monitoring, it's a necessity for 2024. A few laws passed during the last legislative session contained changes with an effective date of January 1, 2025. NDE has been making the rounds on federal purchasing and procurement reviews. We're sending the update now so you can at least discuss it at your December meetings and act in either December or January.

We already discussed most of the updates below during our first policy update webinar and have presented on the changes several times. For that reason, we are not holding an accompanying webinar with this midyear update. However, if you have any questions about either update, please reach out to one of us or send an email to ksb@ksbschoollaw.com.

Policy Changes

REVISION OF POLICY 2008: MEETINGS

Beginning January 1, 2025, school districts will have two options to choose from to give notice of their meetings, and it depends on whether you have time to get your notice in the local newspaper. Schools may select one of the following options:

- (1) Publish in a newspaper of general circulation within the school's jurisdiction that is finalized for printing prior to the time and date of the meeting AND (2) post on the newspaper's website, if available, AND (3) post on a statewide website established and maintained as a repository for such notices by a majority of Nebraska newspapers; ***OR***
- (1) Post to the newspaper's website, if available, AND (2) post to a statewide website established and maintained as a repository for such notices by a majority of Nebraska newspapers if no edition of a newspaper of general circulation within the public body's jurisdiction is to be finalized for printing prior to the time and date of the meeting.

After January 1, 2025, in cases where a newspaper refuses, neglects, or is unable to timely publish the notice, the school district may lawfully advertise its meeting by (1) posting the notice on its website, if available, and (2) submitting a post on a statewide website established and maintained as a repository for such notices by a majority of Nebraska newspapers, AND (3) posting the notice in a "conspicuous public place" within its jurisdiction. The school must keep a written record of the posting.

This change is required.

REVISION OF POLICY 3004.1: FISCAL MANAGEMENT FOR PURCHASING AND PROCUREMENT USING FEDERAL FUNDS

In October, NDE released new technical assistance guides regarding federal grant purchasing. Based on a review of those technical assistance guides, we made several minor changes to 3004.1 for clarity.

We also made a few tweaks based on "findings" from audits several schools have been through. While we don't believe all of these things are required by law to be in your policy, we know you also want to pass those audits and

reviews when you get them. As always, if you go through a review by NDE and they note any policy deficiency, please let us know.

These changes are required.

REVISION OF POLICY 3060: FIREARMS AND WEAPONS - NON-STUDENTS

As you know, changes to Nebraska's firearms laws required an update to KSB's policy this past summer. Among the changes was the right of Class I and II school districts (those with a district-wide population of less than 5,000 residents) to allow "authorized security personnel" to carry firearms and ammunition on school grounds, in school vehicles, and at school activities.

Authorized security personnel could be employees, contractors, or other individuals you authorize as a school board. One of the things we have discussed since this spring is the uncertainty around insurance coverage for those schools that plan to implement authorized security personnel programs. As we understand it, ALICAP, EMC, and other school carriers plan to do at least some exclusions for schools that authorize security personnel other than those already authorized to carry in the law (like law enforcement officers). Before implementing an authorized security personnel program, we strongly recommend that you consult with your insurance provider to fully understand coverage you may and may not have this year and in future coverage years.

The law also required NDE and the State Patrol to create a sample policy for those schools that do plan to have an authorized security personnel program. Many of the changes we have included in the updated policy 3060 are concepts from that sample policy. You are not required to adopt the NDE/State Patrol model, but it is helpful in a legal sense to follow the lead of the agencies on items like training, background checks, and other safety protocols. You can access the draft model policy here.

Many administrators and board members have asked us our opinion on this option for their schools. We worry about whether you have insurance coverage; we worry about semi-trained employees or contractors (compared to law enforcement officers) put in this position; and we worry about the safety of your students, staff, and patrons. We also hear from many of you that even if you call law enforcement, they are 30+ minutes away much of

the time. In summary, we're not in support of or opposed to the concept, but our advice is that you should thoroughly think through the legal and practical implications of a program like this. We are happy to be part of this conversation with you and your school boards as well.

This change is OPTIONAL for Class I and II school districts, only.

CONCLUSION

It is all too easy to adopt policies that look good but that do not actually reflect how the school operates or assist the school in accomplishing its goals. Every year we stress that it is very important to us to give you a working, useful set of policies and a continuing ***policy service***. For our Complete Service subscribers, there is no additional charge for revisions to our policies or consultation about them. Please don't hesitate to contact any of us with questions about the updates or other policies. Our group e-mail address is ksb@ksbschoollaw.com.

2008
Meetings

The formation of policy is public business and will be conducted openly in accordance with the Nebraska Open Meetings Act.

1. Types of Meetings

   a. The board shall hold its regular meetings on or before the third Monday of each month.

   b. Special and emergency meetings may be called as provided by law.

   c. The board may schedule work sessions and retreats in order to provide board members and administrators with the opportunity to plan, research, and engage in discussion.

2. Notice

The board shall give reasonable advance publicized notice of the time and place of each of its meetings, which generally will be 48 hours or more in advance of the meeting. Such notice shall be transmitted to all members of the board and to the public.

Publication Procedure if the Newspaper Will Be Finalized for Printing Prior to the Time and Date of the Meeting. Notice of regular and special meetings shall be (1) published in a newspaper of general circulation within the district that is finalized for printing prior to the time and date of the meeting, (2) posting on the newspaper's website, if available, and (3) posting on a statewide website established and maintained as a repository for such notices by a majority of Nebraska newspapers.

Deleted: and, if available, on the newspaper's website.

Publication Procedure if the Newspaper Will Not Be Finalized for Printing Prior to the Time and Date of the Meeting. Notice of regular and special meetings shall be (1) posting on the newspaper's website, if available, and (2) posting on a statewide website established and maintained as a repository for such notices by a majority of Nebraska newspapers if no edition of a newspaper of general circulation within the school district's jurisdiction is to be finalized for printing prior to the time and date of the meeting.

Newspapers of general circulation in the district include the _____. Such notice shall contain a statement that the agenda

Deleted: , but are not necessarily limited to,

Deleted: or the Omaha World-Herald

shall be readily available for public inspection at the administration office of the school during the normal business hours. In addition, the superintendent is authorized, but not required, to publish the notice of any meeting on the school district's website, posting in three prominent places within the school district, or by any other appropriate method designated by the board.

In case of refusal, neglect, or inability of the newspaper to timely publish the notice, the school district will (1) post the notice on its website, if available, (2) submit a post on a statewide website established and maintained as a repository for such notices by a majority of Nebraska newspapers, and (3) post the notice in a conspicuous public place in the school district's jurisdiction. The school district will keep a written record of the posting.

Deleted: and

When it is necessary to hold an emergency meeting without reasonable advance public notice, the nature of the emergency shall be stated in the minutes of the meeting, and any formal action taken in such meeting shall pertain only to the emergency. Complete minutes of such emergency meetings specifying the nature of the emergency and any formal action taken at the meeting shall be made available to the public no later than the end of the next regular business day.

3. Weather Delays

In the event of inclement weather which makes it dangerous or unreasonable for board members or members of the public to attend a meeting for which notice has already been given, such meeting may be postponed by the board president. The board will communicate the delay to members of the public by posting it on the district's website and by following the same communication protocol that the district follows when student attendance at school is called off due to inclement weather. When possible, the board president and superintendent will attempt to communicate the information to local media members and business owners to assist in notifying the public of the delay. Notice of the date, time, and location of the postponed meeting will be advertised as required in the "Notice" section above.

4. Minutes

a. The board shall keep minutes of all meetings showing the time, place, members present and absent, the method(s) and date(s) of the meeting notice, and the substance of all matters discussed.

b. Any action taken on any question or motion duly moved and seconded shall be by roll call vote of the board in open session,

and the record shall state how each member voted, or if the member was absent or not voting.

c. The minutes of all meetings and evidence and documentation received or disclosed in open session shall be public record and shall be published on the school district's website within ten working days of the last meeting or prior to the next convened meeting, whichever occurs earlier. The minutes shall be available on the website for at least six months.

Adopted on: _____
Revised on: _____
Reviewed on: _____

3. Executive Session

4. Motion to Adjourn
   A motion to adjourn the meeting and set the next regular meeting for Jan 13 at 7 PM at Polk at 8:25am Passed with a motion by Megan Pike and a second by Nathan Spurling.
   Terry Carlstrom: Yea, Erin Meyer: Yea, Megan Pike: Yea, Nathan Spurling: Yea, Kraig Urkoski: Yea, Shane Van Pelt: Yea

5. ***CLOSED SESSION: If, during the course of the meeting, discussion of any item on the agenda should be held in closed meeting, the board will conduct a closed meeting in accordance with the Nebraska Open Meetings Act**

6. ***SEQUENCE OF AGENDA: The sequence of agenda topics is subject to change at the discretion of the board.**