February 28, 2022 Regular Board Meeting
Monday, February 28, 2022 6:00 PM Central

High School Media Center
531 Morse Street
Norwood Young America, MN 55368

Sara Eischens:	Present
Shelby Erickson:	Present
Nicole Evenski:	Present
Elroy Latzig:	Present
Sarah Lehrke:	Present
Rich Schug:	Present
Kyle Strickfaden:	Absent

Present: 6, Absent: 1.
Tim Schochenmaier
Andie Franck
Jim Mesik
Chris Gibbs - Nexus
Maddie Gamber - Student Council
Norah Erickson - Student Council

A. PROCEDURAL ITEMS:
- A.1. Call to order
- A.2. Roll Call
- A.3. Pledge of Allegiance
- A.4. Approval of Agenda

  Move to approve the agenda as presented/amended:. This motion, made by Sarah Lehrke and seconded by Sara Eischens, Carried.
  Kyle Strickfaden: Absent, Sara Eischens: Yea, Shelby Erickson: Yea, Nicole Evenski: Yea, Elroy Latzig: Yea, Sarah Lehrke: Yea, Rich Schug: Yea
  Yea: 6, Nay: 0, Absent: 1
- A.5. Consent Agenda

  Move to approve Consent agenda as presented. This motion, made by Rich Schug and seconded by Shelby Erickson, Carried.
  Kyle Strickfaden: Absent, Sara Eischens: Yea, Shelby Erickson: Yea, Nicole Evenski: Yea, Elroy Latzig: Yea, Sarah Lehrke: Yea, Rich Schug: Yea
  Yea: 6, Nay: 0, Absent: 1
- A.6. Acceptance of Gifts

  Move to approve gifts. This motion, made by Sarah Lehrke and seconded by Sara Eischens, Carried.
  Kyle Strickfaden: Absent, Sara Eischens: Yea, Shelby Erickson: Yea, Nicole Evenski: Yea, Elroy Latzig: Yea, Sarah Lehrke: Yea, Rich Schug: Yea
  Yea: 6, Nay: 0, Absent: 1

B. PUBLIC FORUM

C. INFORMATIONAL ITEMS: MONTHLY REPORTS
- C.1. Student Council

C.2. Student Represenative
C.3. Superintendent
C.4. Board

D. DISCUSSION ITEMS
D.1. Nexus: MS/HS Floor Plans
D.2. Student Design Team Feedback

E. OPERATIONAL ITEMS
E.1. Policy 102
Move to approve policy 102 as presented. This motion, made by Sara Eischens and seconded by Sarah Lehrke, Carried.
Kyle Strickfaden: Absent, Sara Eischens: Yea, Shelby Erickson: Yea, Nicole Evenski: Yea, Elroy Latzig: Yea, Sarah Lehrke: Yea, Rich Schug: Yea
Yea: 6, Nay: 0, Absent: 1

E.2. Consideration of Bids: Turf Field
Accept Nexus Award letter as presented the Bid presented by Shaw Industries in the amount of $423,778 Wednesday Feb 23 @ 2 PM the bids were publicly opened in the District Office. This motion, made by Sara Eischens and seconded by Shelby Erickson, Carried.
Kyle Strickfaden: Absent, Sara Eischens: Yea, Shelby Erickson: Yea, Nicole Evenski: Yea, Elroy Latzig: Yea, Sarah Lehrke: Yea, Rich Schug: Yea
Yea: 6, Nay: 0, Absent: 1

F. NEXT BOARD MEETING

G. ADJOURNMENT
7:55 PM. This motion, made by Rich Schug and seconded by Nicole Evenski, Carried.
Kyle Strickfaden: Absent, Sara Eischens: Yea, Shelby Erickson: Yea, Nicole Evenski: Yea, Elroy Latzig: Yea, Sarah Lehrke: Yea, Rich Schug: Yea
Yea: 6, Nay: 0, Absent: 1

January 24, 2022

Monday, January 24, 2022 6:00 PM
High School Media Center, 531 Morse Street, Norwood Young America, MN 55368

Sara Eischens:	Present
Shelby Erickson:	Present
Nicole Evenski:	Present
Elroy Latzig:	Present
Sarah Lehrke:	Present
Rich Schug:	Present
Kyle Strickfaden:	Absent

T Schochenmaier, A Franck, G. Feist, A Meeker, R Erpenbach, J Beneke, M. Wroge, J Wroge, T Erickson,

A. **PROCEDURAL ITEMS:**	**Speaker(s):** Board Chair
A.1. Call to order	**Speaker(s):** Board Chair
A.2. Roll Call	**Speaker(s):** Board Chair
A.3. Pledge of Allegiance	**Speaker(s):** Board Chair
A.4. Approval of Agenda **Action(s):** Move to approve the agenda as presented/amended:. This motion, made by Nicole Evenski and seconded by Rich Schug, Carried. **Voting Detail:** Sara Eischens: Yea Shelby Erickson: Yea Nicole Evenski: Yea Elroy Latzig: Yea Sarah Lehrke: Yea Rich Schug: Yea Kyle Strickfaden: Absent **Voting Summary:** Yea: 6, Nay: 0, Absent: 1	**Speaker(s):** Board Chair
A.5. 2022 Board Organization **Action(s):** CHAIR: Lehrke nominates Eischens: Approved by Acclimation VICE CHAIR: Latig nominates Evenski: Approved by Acclimation Treasurer: Eischens nominated Strickfaden Approved by Acclimation CLERK: Eischens nominates Schug Approved by Acclimation Schug moved to approve 22-23 dates for Board Meetings: Eischens 2nd; 6-0 Erickson moved to approve District Depositories ammended to include Security Bank and Trust. Eischens 2nd: 6-0 Eischens moved to apporve Legal council as presented; Erickosn 2nd: 6-0 Schug moved to approve Board COmpensation as presented: Evenski	**Speaker(s):** Board Chair

2nd: 6-0 Evenski moves to approve Official publication as presented: wnd Eischens: 6-0 Schug moved to apporve Board Committes as presented; Erickson 2nd: 6-0. This motion, made by Sara Eischens and seconded by Rich Schug, Carried.

Voting Detail:

Sara Eischens:	Yea
Shelby Erickson:	Yea
Nicole Evenski:	Yea
Elroy Latzig:	Yea
Sarah Lehrke:	Yea
Rich Schug:	Yea
Kyle Strickfaden:	Absent

Voting Summary: Yea: 6, Nay: 0, Absent: 1

A.6. Consent Agenda — **Speaker(s):** Board Chair

Action(s):

Move to approve consent agenda as presented. This motion, made by Sara Eischens and seconded by Rich Schug, Carried.

Voting Detail:

Sara Eischens:	Yea
Shelby Erickson:	Yea
Nicole Evenski:	Yea
Elroy Latzig:	Yea
Sarah Lehrke:	Yea
Rich Schug:	Yea
Kyle Strickfaden:	Absent

Voting Summary: Yea: 6, Nay: 0, Absent: 1

A.7. Acceptance of Gifts — **Speaker(s):** Board Chair

B. **PUBLIC FORUM** — **Speaker(s):** Board Chair

C. **INFORMATIONAL ITEMS: MONTHLY REPORTS** — **Speaker(s):** Board Chair

C.1. Student Council — **Speaker(s):** Board Chair

C.2. Student Represenative — **Speaker(s):** Board Chair

C.3. Superintendent — **Speaker(s):** Board Chair

C.4. Board — **Speaker(s):** Board Chair

D. **DISCUSSION ITEMS** — **Speaker(s):** Board Chair

D.1. Elementary Program Updates: Ron Erpenbach

D.2. Middle/High School Program Updates: Tom Erickson

D.3. Community Education Program Updates: Kelly Vossen

D.4. Covid-19 Update

D.5. Construction Update

E. **OPERATIONAL ITEMS** **Speaker(s):** Board Chair

E.1. Consideration of 2022-2023 School Calendar as presented

Action(s):

Move to approve the 2022-2023 calendar with the ammendment of removing the Kindergarten Registration date on Feb 16, 2023. This motion, made by Sara Eischens and seconded by Nicole Evenski, Carried.

Voting Detail:

Sara Eischens:	Yea
Shelby Erickson:	Yea
Nicole Evenski:	Yea
Elroy Latzig:	Yea
Sarah Lehrke:	Yea
Rich Schug:	Yea
Kyle Strickfaden:	Absent

Voting Summary: Yea: 6, Nay: 0, Absent: 1

E.2. Consideration of policies:101, 101.1, 102, 103 and 104

Action(s):

Move to approve Policies as presented: 101; 1st Eischens 2nd Erickson 6-0 101.1; 1st Schug 2nd Evenski 6-0 103; 1st Eischen 2nd Erickson 6-0 104 (to include our Mission, Vision, Values); 1st Erickson 2nd Latzig 6-0. This motion, made by Sara Eischens and seconded by Shelby Erickson, Carried.

Voting Detail:

Sara Eischens:	Yea
Shelby Erickson:	Yea
Nicole Evenski:	Yea
Elroy Latzig:	Yea
Sarah Lehrke:	Yea
Rich Schug:	Yea
Kyle Strickfaden:	Absent

Voting Summary: Yea: 6, Nay: 0, Absent: 1

E.3. Resolution - Building Bonds Series 2022A

Action(s):

Move to approve Resolution - Building Bonds Series 2022A as presented. This motion, made by Elroy Latzig and seconded by Sara Eischens,

Carried.

Voting Detail:

Sara Eischens:	Yea
Shelby Erickson:	Yea
Nicole Evenski:	Yea
Elroy Latzig:	Yea
Sarah Lehrke:	Yea
Rich Schug:	Yea
Kyle Strickfaden:	Absent

Voting Summary: Yea: 6, Nay: 0, Absent: 1

Move to approve Administration Contract Approval. This motion, made by Rich Schug and seconded by Shelby Erickson, Carried.

Voting Detail:

Sara Eischens:	Yea
Shelby Erickson:	Yea
Nicole Evenski:	Yea
Elroy Latzig:	Yea
Sarah Lehrke:	Yea
Rich Schug:	Yea
Kyle Strickfaden:	Absent

Voting Summary: Yea: 6, Nay: 0, Absent: 1

E.4. Authorizing Administration to Contract for Budgeted Items

Action(s):

Move to Approve LEA Representation as presented. This motion, made by Nicole Evenski and seconded by Rich Schug, Carried.

Voting Detail:

Sara Eischens:	Yea
Shelby Erickson:	Yea
Nicole Evenski:	Yea
Elroy Latzig:	Yea
Sarah Lehrke:	Yea
Rich Schug:	Yea
Kyle Strickfaden:	Absent

Voting Summary: Yea: 6, Nay: 0, Absent: 1

E.5. Consideration of LEA Representative Resolution

Action(s):

Move to approve LEA Representation Resolution as presented. This motion, made by Rich Schug and seconded by Shelby Erickson, Carried.

Voting Detail:

Sara Eischens:	Yea

Shelby Erickson:	Yea
Nicole Evenski:	Yea
Elroy Latzig:	Yea
Sarah Lehrke:	Yea
Rich Schug:	Yea
Kyle Strickfaden:	Absent

Voting Summary: Yea: 6, Nay: 0, Absent: 1

F. **NEXT BOARD MEETING** — **Speaker(s):** Board Chair

G. **ADJOURNMENT** — **Speaker(s):** Board Chair

Action(s):

MOve to adjourn meeting at 7:16 PM. This motion, made by Nicole Evenski and seconded by Shelby Erickson, Carried.

Voting Detail:

Sara Eischens:	Yea
Shelby Erickson:	Yea
Nicole Evenski:	Yea
Elroy Latzig:	Yea
Sarah Lehrke:	Yea
Rich Schug:	Yea
Kyle Strickfaden:	Absent

Voting Summary: Yea: 6, Nay: 0, Absent: 1

_____

Board Secretary

Norwood-Young America School
February 28, 2022 Board Bills Payments
Fund Summary

Fund	Description	Total
01	General Fund	$214,382.54
02	Food Service	$42,978.09
04	Community Services	$6,499.85
06	Building Construction Fund	$32,570.80
07	Debt Redemption	$2,800.00
Report Total		**$299,231.28**

Norwood-Young America School
February 28, 2022 Board Bills Payments

Co	Bank	Check No	Code	Rcd	Vendor	Pmt/Void Date	Pmt Type
0108	GEN1	39677	6412		AVIBEN		Check

			E	01	005	110	000	000	305	Business Office Consulting Fees/Services	$123.35	
PO#:	Voucher #:	75839	Invoice		Invoice No:	22268		2/28/2022			Paid Amt:	$123.35
											Check Amount:	$123.35

Co	Bank	Check No	Code	Rcd	Vendor	Pmt/Void Date	Pmt Type
0108	GEN1	39678	6435		BRICK & BREW PROPERTIES LLC		Check

			E	01	005	850	000	302	570	March 2022 Lease	$1,849.71	
PO#: 21538	Voucher #:	75840	Invoice		Invoice No:	March2022		2/28/2022			Paid Amt:	$1,849.71
											Check Amount:	$1,849.71

Co	Bank	Check No	Code	Rcd	Vendor	Pmt/Void Date	Pmt Type
0108	GEN1	39679	4946		BSN SPORTS LLC		Check

			E	01	300	294	056	000	401	Baseballs Diamond D1- NFHS/NOSCAE	$449.94	
			E	01	300	294	056	000	401	Baseballs Mark 1 Offical League Baseball	$449.90	
			E	01	300	294	056	000	401	Shipping	$22.41	
PO#: 22339	Voucher #:	75841	Invoice		Invoice No:	915705289		2/28/2022			Paid Amt:	$922.25
			E	01	300	294	052	000	401	Legacy TF-1000 Basketballs	$699.90	
			E	01	300	294	052	000	401	Shipping	$16.37	
PO#: 21839	Voucher #:	75842	Invoice		Invoice No:	915745303		2/28/2022			Paid Amt:	$716.27
			E	01	300	292	000	000	402	Balance due on Wrestling uniforms, Inv. 708842	$2,189.50	
			E	01	300	292	000	000	402	Credit from duplicate payment on Inv 70884286E	($316.06)	
PO#: 22357	Voucher #:	75843	Invoice		Invoice No:	915310388		2/28/2022			Paid Amt:	$1,873.44
			E	01	300	294	056	000	401	Tanner Tee 26-43"	$359.96	
			E	01	300	294	056	000	401	Select PWR BBcor -3 33"	$399.95	
			E	01	300	294	056	000	401	BB22AL ALPHA ALX -3 32	$299.99	
			E	01	300	294	056	000	401	Shipping	$49.08	
PO#: 22358	Voucher #:	75844	Invoice		Invoice No:	916025848		2/28/2022			Paid Amt:	$1,108.98
			E	01	100	810	000	000	305	Elem. Maint Consulting/Serv	$5,867.59	
			E	01	200	810	000	000	305	MS Maint Consulting Fees/Serv	$5,867.59	
			E	01	300	810	000	000	305	MS Maint Consulting Fees/Serv	$5,867.59	
			E	02	005	770	000	701	305	Consulting Fees/Serv	$1,029.87	
			E	04	005	590	003	000	305	Preschool Consulting Fees/Serv	$451.47	
			E	01	300	810	000	000	305	HS Maint Consulting Fees/Serv	$392.82	
PO#:	Voucher #:	75854	Invoice		Invoice No:	7352		2/28/2022			Paid Amt:	$19,476.93
											Check Amount:	$24,097.87

Co	Bank	Check No	Code	Rcd	Vendor	Pmt/Void Date	Pmt Type
0108	GEN1	39680	1442		DALCO		Check

			E	01	200	810	000	000	401	School Cleaning Supplies	$1,804.24	
PO#: 22319	Voucher #:	75845	Invoice		Invoice No:	3888740		2/28/2022			Paid Amt:	$1,804.24
			E	01	200	810	000	000	401	School Supplies	$50.02	
PO#: 22319	Voucher #:	75846	Invoice		Invoice No:	3891826		2/28/2022			Paid Amt:	$50.02
			E	01	200	810	000	000	401	School Cleaning Supplies	$63.41	
PO#: 22319	Voucher #:	75847	Invoice		Invoice No:	3891863		2/28/2022			Paid Amt:	$63.41
			E	01	200	810	000	000	401	School Cleaning Supplies	$79.09	
PO#: 22319	Voucher #:	75848	Invoice		Invoice No:	3891907		2/28/2022			Paid Amt:	$79.09
			E	01	200	810	000	000	401	School Cleaning Supplies	$225.20	
PO#: 22319	Voucher #:	75849	Invoice		Invoice No:	3888774		2/28/2022			Paid Amt:	$225.20
			E	02	005	770	000	701	350	Dish washing Solutions	$478.76	
PO#: 22319	Voucher #:	75850	Invoice		Invoice No:	3888831		2/28/2022			Paid Amt:	$478.76
			E	01	200	810	000	000	401	School Supplies	$181.26	
PO#: 22319	Voucher #:	75851	Invoice		Invoice No:	3886301		2/28/2022			Paid Amt:	$181.26
			E	01	200	810	000	000	401	School Cleaning Supplies	$38.88	
PO#: 22319	Voucher #:	75852	Invoice		Invoice No:	3885708		2/28/2022			Paid Amt:	$38.88
			E	01	200	810	000	000	401	Waste Baskets For Gym Events	$88.56	
PO#: 22319	Voucher #:	75853	Invoice		Invoice No:	3885621		2/28/2022			Paid Amt:	$88.56
											Check Amount:	$3,009.42

Co	Bank	Check No	Code	Rcd	Vendor	Pmt/Void Date	Pmt Type
0108	GEN1	39681	2721		DASHIR MANAGEMENT SERVICES INC		Check

			E	01	100	810	000	000	305	Elem. Maint Consulting/Serv	$5,867.59	
			E	01	200	810	000	000	305	MS Maint Consulting Fees/Serv	$5,867.59	
			E	01	300	810	000	000	305	HS Maint Consulting Fees/Serv	$5,867.59	
			E	02	005	770	000	701	305	Consulting Fees/Serv	$1,029.87	
			E	04	005	590	003	000	305	Preschool Consulting Fees/Serv	$451.47	
			E	01	300	810	000	000	305	HS Maint Consulting Fees/Serv	$394.29	
PO#:	Voucher #:	75855	Invoice		Invoice No:	7371		2/28/2022			Paid Amt:	$19,478.40
			E	01	100	810	000	000	305	Elem. Maint Consulting/Serv	$5,867.59	
			E	01	200	810	000	000	305	MS Maint Consulting Fees/Serv	$5,867.59	
			E	01	300	810	000	000	305	HS Maint Consulting Fees/Serv	$5,867.59	
			E	02	005	770	000	701	305	Consulting Fees/Serv	$1,029.87	
			E	04	005	590	003	000	305	Preschool Consulting Fees/Serv	$451.47	
PO#:	Voucher #:	75856	Invoice		Invoice No:	7390		2/28/2022			Paid Amt:	$19,084.11
											Check Amount:	$38,562.51

Co	Bank	Check No	Code	Rcd	Vendor	Pmt/Void Date	Pmt Type
0108	GEN1	39682	4717		ECM PUBLISHERS, INC.		Check

			E	01	005	170	000	000	305	Consulting Fees/Serv	$49.14	
PO#:	Voucher #:	75857	Invoice		Invoice No:	875839		2/28/2022			Paid Amt:	$49.14
			E	01	005	170	000	000	305	Consulting Fees/Serv	$64.20	
PO#:	Voucher #:	75858	Invoice		Invoice No:	876535		2/28/2022			Paid Amt:	$64.20

Norwood-Young America School
February 28, 2022 Board Bills Payments

Co	Bank	Check No	Code	Rcd	Vendor	Pmt/Void Date	Pmt Type
0108	GEN1	39682	4717		ECM PUBLISHERS, INC.		Check
				E 01 005 170 000 000 305	Consulting Fees/Serv	$64.20	
	PO#:	Voucher #:	75859	Invoice	Invoice No: 877491	2/28/2022	Paid Amt: $64.20
							Check Amount: $177.54
0108	GEN1	39683	00666		ECOLAB PEST ELIMINATION DIVISION		Check
				E 01 100 810 000 000 401	Quarterly Service	$391.54	
	PO#: 22320	Voucher #:	75860	Invoice	Invoice No: 6104199	2/28/2022	Paid Amt: $391.54
							Check Amount: $391.54
0108	GEN1	39684	00893		EHLERS & ASSOCIATES, INC.		Check
				E 07 005 910 000 000 790	Oth Debt Service Exp	$2,800.00	
	PO#:	Voucher #:	75861	Invoice	Invoice No: 89707	2/28/2022	Paid Amt: $2,800.00
							Check Amount: $2,800.00
0108	GEN1	39685	4883		EIDE BAILLY LLP		Check
				E 01 005 110 000 000 313	Business Office Audit Fees	$3,575.95	
	PO#:	Voucher #:	75862	Invoice	Invoice No: EI01262132	2/28/2022	Paid Amt: $3,575.95
							Check Amount: $3,575.95
0108	GEN1	39686	00112		ERPENBACH, RON		Check
				E 01 100 050 000 000 366	Meal at conference	$22.28	
				E 01 100 050 000 000 366	Hotel and Parking at conference	$395.02	
				E 01 100 050 000 000 366	Miles to conference 2-4 back on 2-5	$46.80	
				E 01 100 050 000 000 366	Miles back and forth on 2-3	$46.80	
	PO#: 22304	Voucher #:	75863	Invoice	Invoice No: ConferenceExpenses	2/28/2022	Paid Amt: $510.90
				E 01 100 050 000 000 320	January tech allowance	$120.00	
	PO#: 21588	Voucher #:	75864	Invoice	Invoice No: Jan2022	2/28/2022	Paid Amt: $120.00
							Check Amount: $630.90
0108	GEN1	39687	01239	P1	FOLLETT SCHOOL SOLUTIONS, INC.		Check
				E 01 300 620 000 000 405	Library Circulation System Renewal	$756.73	
				E 01 100 620 000 000 405	Library Circulation System Renewal	$756.73	
	PO#: 22316	Voucher #:	75865	Invoice	Invoice No: 1465128	2/28/2022	Paid Amt: $1,513.46
							Check Amount: $1,513.46
0108	GEN1	39688	3535		FOUR POINT 0 SCHOOL SERVICES		Check
				E 01 005 760 000 720 360	Transp Contract w/Priv or Pub Carriers	$48,107.43	
				E 01 005 760 000 723 360	SpEd Trans Contr. w/Pub or Priv Car	$24,120.88	
				E 04 005 590 003 733 360	Preschool Transportation	$4,425.44	
	PO#:	Voucher #:	75866	Invoice	Invoice No: 2-2022	2/28/2022	Paid Amt: $76,653.75
				E 01 300 294 052 733 360	Boys Basketball Transportation	$522.60	
				E 01 300 296 052 733 360	Girls Basketball Transportation	$683.50	
				E 01 300 294 054 733 360	Wrestling Transportation	$1,681.00	
				E 01 300 291 066 733 360	HS Knowledge Bowl Transportation	$539.80	
				E 01 200 292 049 733 360	MS Athletics Trans Contracts Pc	$867.40	
				E 01 300 301 501 733 360	FFA and Voc Ag Transportation	$110.00	
				E 01 300 291 108 733 360	Robotics Trans Contracts Pc	$200.20	
				E 01 300 301 501 733 360	FFA and Voc Ag Transportation	$40.00	
				E 01 300 291 111 733 360	One Act Play Transportation	$468.30	
	PO#:	Voucher #:	75867	Invoice	Invoice No: Jan-22	2/28/2022	Paid Amt: $5,112.80
							Check Amount: $81,766.55
0108	GEN1	39689	4288		FRIEND, ALISSA		Check
				E 01 100 203 074 000 430	Smile Face Snowman Picture Frames	$18.78	
	PO#: 22336	Voucher #:	75868	Invoice	Invoice No: ClassroomSupplies	2/28/2022	Paid Amt: $18.78
							Check Amount: $18.78
0108	GEN1	39690	5264		FUN AND FUNCTION		Check
				E 01 100 412 011 420 433	Break Away Bite Bands	$29.99	
				E 01 100 412 011 420 433	XXT Grabber Kit	$33.98	
				E 01 100 412 011 420 433	Chew Stixx- Blue No Flavor	$19.98	
				E 01 100 412 011 420 433	shipping	$10.91	
	PO#: 22216	Voucher #:	75869	Invoice	Invoice No: 556116	2/28/2022	Paid Amt: $94.86
							Check Amount: $94.86
0108	GEN1	39691	6468		GARCIA-SANCHEZ, FLORMIRA		Check
				E 01 100 219 000 317 305	Translation Services, Jan 26, Feb 1 and 3	$60.00	
	PO#: 22362	Voucher #:	75870	Invoice	Invoice No: 0000023	2/28/2022	Paid Amt: $60.00
							Check Amount: $60.00
0108	GEN1	39692	3750		HENDEL, ANN		Check
				E 01 100 050 000 000 401	Elem Admin General Supplies	$39.00	
	PO#:	Voucher #:	75871	Invoice	Invoice No: Supplies	2/28/2022	Paid Amt: $39.00
							Check Amount: $39.00
0108	GEN1	39693	2439		HENDRYCKS, PHIL		Check
				E 04 005 570 040 321 320	cell phone reimbursement July - Dec 2021	$720.00	
	PO#: 22281	Voucher #:	75872	Invoice	Invoice No: CellPhone	2/28/2022	Paid Amt: $720.00
							Check Amount: $720.00

Norwood-Young America School
February 28, 2022 Board Bills Payments

Co	Bank	Check No	Code	Rcd	Vendor	Pmt/Void Date	Pmt Type
0108	GEN1	39694	6620		IDEAL ENERGIES SOLAR LEASING 2021 LLC		Check
				E 01 005 850 000 302 580	Solar Array at Elementary School February	$406.79	
	PO#: 21747	Voucher #:	75873	Invoice	Invoice No: FebruaryLease	2/28/2022	Paid Amt: $406.79
							Check Amount: $406.79
0108	GEN1	39695	09658		J W PEPPER & SON INC		Check
				E 01 200 258 259 000 430	Invoice #364030452 - Solo/Ensemble, Concert B	$88.90	
	PO#: 22355	Voucher #:	75874	Invoice	Invoice No: 364030452	2/28/2022	Paid Amt: $88.90
				E 01 200 258 259 000 430	Invoice #364031858 - Solo and Ensemble Music	$29.98	
	PO#: 22355	Voucher #:	75875	Invoice	Invoice No: 364031858	2/28/2022	Paid Amt: $29.98
				E 01 200 258 259 000 430	Invoice #264029644 - Leit It Go eprint	$61.99	
	PO#: 22355	Voucher #:	75876	Invoice	Invoice No: 364029644	2/28/2022	Paid Amt: $61.99
							Check Amount: $180.87
0108	GEN1	39696	00505		LANO EQUIPMENT		Check
				E 01 300 301 501 830 433	37796 Gasket	$23.55	
				E 01 300 301 501 830 433	692249 Gasket	$27.36	
	PO#: 22345	Voucher #:	75877	Invoice	Invoice No: 70432	2/28/2022	Paid Amt: $50.91
							Check Amount: $50.91
0108	GEN1	39697	3185		MARCO TECHNOLOGIES, LLC		Check
				E 01 005 108 000 795 305	Professional Services - Configure, Test and Impl	$912.50	
	PO#: 21586	Voucher #:	75878	Invoice	Invoice No: INV9276176	2/28/2022	Paid Amt: $912.50
				E 01 005 108 000 795 305	Professional Services - Configure, Test and Impl	$870.00	
	PO#: 21586	Voucher #:	75879	Invoice	Invoice No: INV9591215	2/28/2022	Paid Amt: $870.00
				E 01 005 108 000 000 319	February 2022 Preferred IT	$1,500.00	
	PO#: 21616	Voucher #:	75880	Invoice	Invoice No: INV9640068	2/28/2022	Paid Amt: $1,500.00
				E 01 005 108 000 795 305	Tech Levy - Consulting Fees/Serv	$2,987.50	
	PO#:	Voucher #:	75881	Invoice	Invoice No: INV9590104	2/28/2022	Paid Amt: $2,987.50
				E 01 005 108 000 795 305	Tech Levy - Consulting Fees/Serv	$372.00	
	PO#:	Voucher #:	75882	Invoice	Invoice No: INV9621658	2/28/2022	Paid Amt: $372.00
							Check Amount: $6,642.00
0108	GEN1	39698	4393		MATHESON TRI-GAS, INC.		Check
				E 01 300 301 501 830 433	Argon	$69.00	
				E 01 300 301 501 830 433	CO2-Argon mix	$46.41	
				E 01 300 301 501 830 433	Fuel adjustment charge	$19.50	
				E 01 300 301 501 830 433	haz material charge	$11.95	
				E 01 300 301 501 830 433	delivery charge	$27.23	
	PO#: 22346	Voucher #:	75883	Invoice	Invoice No: 0025077434	2/28/2022	Paid Amt: $174.09
							Check Amount: $174.09
0108	GEN1	39699	1606		MAYER LUMBER CO, INC		Check
				E 01 300 301 501 830 433	Rough Cedar 1x12x8	$57.20	
				E 01 300 301 501 830 433	Rough Cedar 1x10x10	$206.00	
				E 01 300 301 501 830 433	Rough Cedar 1x6x8	$89.60	
				E 01 300 301 501 830 433	Rough Cedar 1x1x8x8	$121.60	
	PO#: 22347	Voucher #:	75884	Invoice	Invoice No: 211933	2/28/2022	Paid Amt: $474.40
							Check Amount: $474.40
0108	GEN1	39700	1912		MAYER LUTHERAN HIGH SCHOOL		Check
				E 01 300 296 045 000 391	Girls Soccer coop fees	$5,349.80	
	PO#: 22297	Voucher #:	75885	Invoice	Invoice No: GirlsSoccer	2/28/2022	Paid Amt: $5,349.80
							Check Amount: $5,349.80
0108	GEN1	39701	4316		MCDOWELL AGENCY, INC.		Check
				E 01 005 110 000 000 305	Business Office Consulting Fees/Services	$192.00	
	PO#:	Voucher #:	75886	Invoice	Invoice No: 135885	2/28/2022	Paid Amt: $192.00
							Check Amount: $192.00
0108	GEN1	39702	00572		MENARDS INC		Check
				E 01 200 810 000 000 401	Window Blinds M/S Office	$44.94	
	PO#: 22324	Voucher #:	75887	Invoice	Invoice No: 27629	2/28/2022	Paid Amt: $44.94
				E 01 300 865 000 347 401	3M safety face sheilds	$23.98	
				E 01 200 255 000 000 430	scroll saw blades	$11.94	
				E 01 300 301 501 830 433	4.5" cutoff wheels for grinders	$5.70	
				E 01 300 301 501 830 433	2" hinges	$7.96	
				E 01 300 301 501 830 433	Blue RTV Gasket Maker	$4.29	
				E 01 300 301 501 830 433	socket adapter	$9.96	
				E 01 300 301 501 830 433	T-20 bits	$5.94	
				E 01 300 301 501 830 433	Jigsaw Blades	$8.48	
				E 01 300 301 501 830 433	5" casters (wheels)	$21.98	
				E 01 200 255 000 000 430	1x4 boards	$19.14	
	PO#: 22278	Voucher #:	75888	Invoice	Invoice No: 27433	2/28/2022	Paid Amt: $119.37
							Check Amount: $164.31
0108	GEN1	39703	3908		MESIK, JAMES		Check
				E 01 005 760 000 720 442	Gas purchased on FFA trip in 2021	$14.40	
	PO#: 22257	Voucher #:	75889	Invoice	Invoice No: Fuel for FFATrip	2/28/2022	Paid Amt: $14.40
							Check Amount: $14.40

Norwood-Young America School
February 28, 2022 Board Bills Payments

Co	Bank	Check No	Code	Rcd	Vendor								Pmt/Void Date		Pmt Type	
0108	GEN1	39704	2352		MN IAAA										Check	
				E	01	300	292	000	000	366	State Convention - AD's	$365.00				
	PO#: 22348	Voucher #:		75890	Invoice			Invoice No:	VossenRegistration				2/28/2022		Paid Amt:	$365.00
															Check Amount:	$365.00
0108	GEN1	39705	3310		MUSSER ENVIRONMENTAL INC.										Check	
				E	01	005	865	000	352	305	LTFM H&S Mgmt. Consulting Fees/Serv	$2,830.79				
	PO#:	Voucher #:		75891	Invoice			Invoice No:	007-05				2/28/2022		Paid Amt:	$2,830.79
															Check Amount:	$2,830.79
0108	GEN1	39706	3774	R1	NCS PEARSON										Check	
				E	01	100	420	000	419	433	Item #QG3WC5RW, WISC-V Q-global Scoring S	$155.00				
				E	01	100	420	000	419	433	Item # 30867, BASC-3 Q-global Administration/F	$180.00				
	PO#: 22301	Voucher #:		75893	Invoice			Invoice No:	17397441				2/28/2022		Paid Amt:	$335.00
															Check Amount:	$335.00
0108	GEN1	39707	1030		PAR INC										Check	
				E	01	100	420	000	419	433	Item # 10993-11, BRIEF2 Parent/Teacher Form S	$180.00				
	PO#: 22300	Voucher #:		75892	Invoice			Invoice No:	IN-00055581				2/28/2022		Paid Amt:	$180.00
															Check Amount:	$180.00
0108	GEN1	39708	3210		PITSCO EDUCATION										Check	
				E	01	200	255	000	000	430	CO2 Cartridge 10-Pack Item: W44623 (4-gram)	$76.44				
				E	01	200	255	000	000	430	Credit Memo C24575	($8.65)				
	PO#: 22187	Voucher #:		75894	Invoice			Invoice No:	22-000002706				2/28/2022		Paid Amt:	$67.79
															Check Amount:	$67.79
0108	GEN1	39709	6710		PLANTZ, MARK										Check	
				R	02	005	770	000	701	601	Sales to Pupils	$18.00				
	PO#:	Voucher #:		75895	Invoice			Invoice No:	FoodServiceRefund				2/28/2022		Paid Amt:	$18.00
															Check Amount:	$18.00
0108	GEN1	39710	05638		RIDDELL ALL AMERICAN SPORTS CORP.										Check	
				E	01	300	294	050	000	350	base price	$343.57				
				E	01	300	294	050	000	350	recertification of 43 helmets	$42.57				
				E	01	300	294	050	000	350	face protectors removed	$95.52				
				E	01	300	294	050	000	350	removal /inspection of interior parts	$167.70				
				E	01	300	294	050	000	350	face protectors installed	$85.57				
				E	01	300	294	050	000	350	major repairs/velcro	$71.92				
				E	01	300	294	050	000	350	shell preparations and buffering	$341.85				
				E	01	300	294	050	000	350	new snap hardware installed	$42.57				
				E	01	300	294	050	000	350	new face protector hardware installed	$171.57				
				E	01	300	294	050	000	350	new grommets installed	$43.00				
				E	01	300	294	050	000	350	new interior parts installed	$40.26				
				E	01	300	294	050	000	350	new s and z pads (10)	$95.50				
				E	01	300	294	050	000	350	NOCSAE certification	$8.60				
				E	01	300	294	050	000	350	freight and handling	$383.64				
	PO#: 22325	Voucher #:		75896	Invoice			Invoice No:	951534111				2/28/2022		Paid Amt:	$1,933.84
															Check Amount:	$1,933.84
0108	GEN1	39711	6661		RIO GRANDE										Check	
				E	01	300	212	610	000	430	Silver Chip Solder, Hard, Item #: 101203, 1 oz	$41.87				
				E	01	300	212	610	000	430	Daddy Dipper Pickle Pot with Clear Lid, Item #: 5	$62.50				
				E	01	300	212	610	000	430	Durston PrecisionFit™ Steel Tapered Ring Manc	$99.00				
				E	01	300	212	610	000	430	Rawhide Mallet, 2 oz., Item #: 112209	$59.80				
				E	01	300	212	610	000	430	Rio Pickle™ for Non-Ferrous Metals, 3 lbs., Item	$11.25				
				E	01	300	212	610	000	430	Heavy-Duty Curved Copper Tweezers, Item #: 50	$26.10				
				E	01	300	212	610	000	430	Boric Acid, Item #: 704096	$15.95				
				E	01	300	212	610	000	430	Sterling Silver Half-Round Wire, 12-Ga., Dead-S	$33.76				
				E	01	300	212	610	000	430	Sterling Silver Half-Round Wire, 14-Ga., Dead-S	$20.63				
				E	01	300	212	610	000	430	Sterling Silver Half-Round Wire, 16-Ga., Dead-S	$13.86				
				E	01	300	212	610	000	430	Freight	$27.41				
	PO#: 22087	Voucher #:		75897	Invoice			Invoice No:	74499311				2/28/2022		Paid Amt:	$412.13
															Check Amount:	$412.13
0108	GEN1	39712	5237		RITEWAY BUSINESS FORMS & DIGITAL PRINTING										Check	
				E	01	005	110	000	000	401	SmartFin Laser Checks beginning with check #4	$291.90				
				E	01	005	110	000	000	401	shipping	$28.59				
	PO#: 22283	Voucher #:		75898	Invoice			Invoice No:	22-30410				2/28/2022		Paid Amt:	$320.49
															Check Amount:	$320.49
0108	GEN1	39713	5287		SOUTHWEST METRO INTERMEDIATE DISTRICT 288										Check	
				E	01	100	405	000	740	396	El DHH SpEd Sal. Purchased from Distr	$8,126.39				
				E	01	100	405	000	740	397	El DHH Sp Ed Benefits Purch. from Dis	$2,751.21				
				E	01	100	400	000	000	390	Elem to Other MN District	$543.88				
				E	01	100	407	000	740	396	Elem VI SpEd Sal. Purchased from Distr	$855.65				
				E	01	100	407	000	740	397	El VI Sp Ed Benefits Purch. from Dis	$274.64				
				E	01	100	408	000	740	396	SpEd Sal. Purchased from Distr	$855.65				
				E	01	100	408	000	740	397	Sp Ed Benefits Purch. from Dis	$274.64				
				E	01	100	410	000	740	396	SpEd Sal. Purchased from Distr	$665.51				

Norwood-Young America School
February 28, 2022 Board Bills Payments

Co	Bank	Check No	Code	Rcd	Vendor	Pmt/Void Date		Pmt Type	
0108	GEN1	39713	5287		SOUTHWEST METRO INTERMEDIATE DISTRICT 288			Check	
				E 01 100 410 000 740 397	Sp Ed Benefits Purch. from Dis		$213.61		
				E 01 100 411 000 740 396	Elem Autustic SpEd Sal. Purch from Distr		$475.36		
				E 01 100 411 000 740 397	Elem Autistic SpEd Benef Purch. from Dis		$152.58		
				E 01 100 412 000 740 396	ECSE SpEd Sal. Purchased from Distr		$5,799.41		
				E 01 100 412 000 740 397	ECSE Sp Ed Benefits Purch. from Dis		$1,861.47		
				E 01 100 400 000 000 390	Elem to Other MN District		$571.43		
				E 01 200 403 000 740 396	SpEd Sal. Purchased from Distr		$190.14		
				E 01 200 403 000 740 397	Sp Ed Benefits Purch. from Dis		$61.03		
				E 01 200 404 000 740 396	SpEd Sal. Purchased from Distr		$190.14		
				E 01 200 404 000 740 397	Sp Ed Benefits Purch. from Dis		$61.03		
				E 01 200 411 000 740 396	MS SpEd Sal. Purchased from Distr		$190.14		
				E 01 200 411 000 740 397	MS Sp Ed Benefits Purch. from Dis		$61.03		
				E 01 200 400 000 000 390	MS to Other MN District		$37.68		
				E 01 300 411 000 740 396	SpEd Sal. Purchased from Distr		$285.22		
				E 01 300 411 000 740 397	Sp Ed Benefits Purch. from Dis		$91.55		
				E 01 300 400 000 000 390	HS to Other MN District		$18.84		
				E 01 300 406 000 740 396	HS SpEd Vision Sal. Purchased from Distr		$920.87		
				E 01 300 406 000 740 397	HS Sp Ed Vision Benefits Purch. from Dis		$216.43		
				E 01 300 400 000 000 390	HS to Other MN District		$56.87		
				E 01 100 420 011 419 303	Itinerant Services - SInha		$1,829.33		
				E 01 100 420 011 419 303	Itinerant Services - Gronseth		$5,856.49		
	PO#:	Voucher #:	75899	Invoice	Invoice No: 3380	2/28/2022		Paid Amt:	$33,488.22
				E 01 100 203 775 000 390	Elem Targ Serv to Other MN District		$2,743.00		
	PO#:	Voucher #:	75900	Invoice	Invoice No: 3403	2/28/2022		Paid Amt:	$2,743.00
				E 01 300 211 775 000 390	HS Targeted Serv to Other MN District		$1,413.00		
	PO#:	Voucher #:	75901	Invoice	Invoice No: 3403	2/28/2022		Paid Amt:	$1,413.00
								Check Amount:	$37,644.22
0108	GEN1	39714	6707		SUNDE LAND SURVEYING, LLC			Check	
				E 06 005 870 000 000 510	Surveying Central Public Ball Field		$9,440.80		
	PO#:	Voucher #:	75902	Invoice	Invoice No: 56073	2/28/2022		Paid Amt:	$9,440.80
				E 06 005 870 000 000 510	Surveying Central Public High School		$23,130.00		
	PO#:	Voucher #:	75903	Invoice	Invoice No: 56072	2/28/2022		Paid Amt:	$23,130.00
								Check Amount:	$32,570.80
0108	GEN1	39715	2325		TAHER, INC. - BIN# 135092			Check	
				E 02 005 770 000 701 305	Consulting Fees/Serv		$22,183.55		
				E 02 005 770 000 701 490	Food		$13,175.89		
				E 02 005 770 000 701 491	Commodities		$2,670.79		
				E 02 005 770 000 701 401	General Supplies		$1,361.49		
	PO#:	Voucher #:	75904	Invoice	Invoice No: 0061056-IN	2/28/2022		Paid Amt:	$39,391.72
								Check Amount:	$39,391.72
0108	GEN1	39716	3912		TIERNEY BROTHERS			Check	
				E 01 200 211 000 000 456	Epson Mounting Bracket		$87.22		
	PO#: 22215	Voucher #:	75905	Invoice	Invoice No: 862967	2/28/2022		Paid Amt:	$87.22
				E 01 200 211 000 000 456	Epson Powerlite 982w Projector		$587.02		
	PO#: 22215	Voucher #:	75906	Invoice	Invoice No: 863296	2/28/2022		Paid Amt:	$587.02
								Check Amount:	$674.24
0108	GEN1	39717	3277		TOTAL NETWORX, INC.			Check	
				E 01 005 108 000 795 305	Tech Levy - Consulting Fees/Serv		$312.50		
	PO#:	Voucher #:	75907	Invoice	Invoice No: TN-8693	2/28/2022		Paid Amt:	$312.50
								Check Amount:	$312.50
0108	GEN1	39718	6472		TRAINING HAUS			Check	
				E 01 300 292 000 000 305	Performance Training - second half		$7,500.00		
	PO#: 22351	Voucher #:	75908	Invoice	Invoice No: 00038392	2/28/2022		Paid Amt:	$7,500.00
								Check Amount:	$7,500.00
0108	GEN1	39719	08026		WM MUELLER & SONS, INC			Check	
				E 01 300 810 000 000 363	Snow Removal		$41.25		
	PO#: 22327	Voucher #:	75909	Invoice	Invoice No: 273765	2/28/2022		Paid Amt:	$41.25
				E 01 300 810 000 000 363	Snow Removal		$1,552.50		
	PO#: 22327	Voucher #:	75910	Invoice	Invoice No: 273712	2/28/2022		Paid Amt:	$1,552.50
								Check Amount:	$1,593.75
								Report Total:	$299,231.28

Norwood-Young America School
February 2022 Payroll Taxes and Liabilities

Bank	Batch	Pmt No	Check No	Pay Type	Grp	Code	Rcd	Vendor	Tax Class	Print	Recon	Void	Pay/Void Date	Amount
GEN1	p20831	53407		Wire	1	04035		TEACHERS RETIREMENT ASSOC		No	No	No	02/04/2022	33,461.28
GEN1	p20831	53408		Wire	1	05255		DEPTARTMENT OF THE TREASURY		No	No	No	02/04/2022	56,908.94
GEN1	p20831	53409		Wire	1	06027		COMMISSIONER OF REVENUE		No	No	No	02/04/2022	9,358.38
GEN1	p20831	53410		Wire	1	3785		EDUCATORS FINANCIAL SERVICES		No	No	No	02/04/2022	8,039.72
GEN1	p20831	53411		Wire	1	3904		FURTHER-SELECT ACCOUNT		No	No	No	02/04/2022	986.62
GEN1	p20832	53496		Wire	1	00150		BLUE CROSS & BLUE SHIELD		No	No	No	02/18/2022	23,421.00
GEN1	p20832	53497		Wire	1	01780		MN CHILD SUPPORT PAYMENT CTR		No	No	No	02/18/2022	439.00
GEN1	p20832	53498		Wire	1	04035		TEACHERS RETIREMENT ASSOC		No	No	No	02/18/2022	35,212.27
GEN1	p20832	53499		Wire	1	05255		DEPTARTMENT OF THE TREASURY		No	No	No	02/18/2022	61,711.77
GEN1	p20832	53500		Wire	1	06027		COMMISSIONER OF REVENUE		No	No	No	02/18/2022	10,206.34
GEN1	p20832	53501		Wire	1	2260		AFLAC		No	No	No	02/18/2022	166.98
GEN1	p20832	53502		Wire	1	3785		EDUCATORS FINANCIAL SERVICES		No	No	No	02/18/2022	8,039.72
GEN1	p20832	53503		Wire	1	3904		FURTHER-SELECT ACCOUNT		No	No	No	02/18/2022	1,276.65
GEN1	p20832	53504		Wire	1	5699		MN PUBLIC EMPLOYEES INSURANCE PF		No	No	No	02/18/2022	60,546.62
GEN1	p20831	53405	39585	Check	1	01140		MADISON NAT'L LIFE INS CO INC.		Yes	No	No	02/04/2022	1,070.88
GEN1	p20831	53406	39586	Check	1	04034		PERA		Yes	No	No	02/04/2022	6,381.48
GEN1	p20832	53493	39643	Check	1	07999		C.E.A.		Yes	No	No	02/18/2022	8,181.20
GEN1	p20832	53494	39644	Check	1	1439		DELTA DENTAL PLAN OF MN		Yes	No	No	02/18/2022	4,651.79
GEN1	p20832	53492	39645	Check	1	06032		MINNESOTA SCHOOL EMP ASSOC		Yes	No	No	02/18/2022	789.90
GEN1	p20832	53495	39646	Check	1	3796		NATIONAL INSURANCE SERVICES OF WI		Yes	No	No	02/18/2022	356.85
GEN1	p20832	53490	39647	Check	1	00808		NCPERS Group Life Ins.		Yes	No	No	02/18/2022	48.00
GEN1	p20832	53491	39648	Check	1	04034		PERA		Yes	No	No	02/18/2022	7,295.78

Bank Total: $338,551.17

Report Total: $338,551.17

February 5-2022 PAYROLL

GROSS PAY	$267,267.65
FEDERAL TAX	(18,628.98)
MN STATE TAX	(9,358.38)
OASDI	(15,512.20)
MEDICARE	(3,627.78)
PERA	(2,962.84)
TRA	(15,805.55)
ANNUITIES	(4,756.38)
FLEX	(17,135.19)
VOLUNTARIES	(5,284.01)
NET PAYROLL	$174,196.34

February 20-2022 PAYROLL

GROSS PAY	$286,438.55
FEDERAL TAX	(20,508.19)
MN STATE TAX	(10,206.34)
OASDI	(16,696.83)
MEDICARE	(3,904.96)
PERA	(3,387.33)
TRA	(16,672.50)
ANNUITIES	(4,756.38)
FLEX	(17,135.19)
VOLUNTARIES	(5,284.01)
NET PAYROLL	$187,886.82

Norwood-Young America School
January 2022 Miscellaneous Payments
Fund Summary

Fund	Description	Total
01	General Fund	$58,512.69
04	Community Services	$3,615.75
08	Trust Fund	$1,650.00
Report Total		**$63,778.44**

2/23/2022
07:52:23

Norwood-Young America School
January 2022 Miscellaneous Payments

Co	Bank	Check No	Code	Rcd	Vendor	Pmt/Void Date	Pmt Type
0108	GEN1	39438	4413		BARFKNECHT, ALAN		Check
				E 01 300 294 052 000 305	Boys Basketball Consulting Fees/Serv	$65.00	
				E 01 300 296 052 000 305	Girls Basketball Consulting Fees/Serv	$65.00	
	PO#:	Voucher #:	75343	Invoice	Invoice No: B&G VarOfficial	1/7/2022	Paid Amt: $130.00
							Check Amount: $130.00
0108	GEN1	39439	2387		BARTH, BRIAN		Check
				E 01 300 294 052 000 305	Boys Basketball Consulting Fees/Serv	$65.00	
				E 01 300 296 052 000 305	Girls Basketball Consulting Fees/Serv	$65.00	
	PO#:	Voucher #:	75344	Invoice	Invoice No: B&G VarOfficial	1/7/2022	Paid Amt: $130.00
							Check Amount: $130.00
0108	GEN1	39440	5126		BLAKE, STEVE		Check
				E 01 300 294 052 000 305	Boys Basketball Consulting Fees/Serv	$57.50	
				E 01 300 296 052 000 305	Girls Basketball Consulting Fees/Serv	$57.50	
	PO#:	Voucher #:	75345	Invoice	Invoice No: B&G JVOfficial	1/7/2022	Paid Amt: $115.00
							Check Amount: $115.00
0108	GEN1	39441	6667		BLOM, JOEL		Check
				E 01 300 294 052 000 305	Boys Basketball Consulting Fees/Serv	$125.00	
	PO#:	Voucher #:	75346	Invoice	Invoice No: BBBOfficial	1/7/2022	Paid Amt: $125.00
							Check Amount: $125.00
0108	GEN1	39442	4792		DECKER, MARK		Check
				E 01 300 294 052 000 305	Boys Basketball Consulting Fees/Serv	$65.00	
				E 01 300 296 052 000 305	Girls Basketball Consulting Fees/Serv	$65.00	
	PO#:	Voucher #:	75347	Invoice	Invoice No: B&G VarOfficial	1/7/2022	Paid Amt: $130.00
							Check Amount: $130.00
0108	GEN1	39443	4479		DRUSCH, MERLYN (PETE)		Check
				E 01 300 296 052 000 305	Girls Basketball Consulting Fees/Serv	$65.00	
				E 01 300 294 052 000 305	Boys Basketball Consulting Fees/Serv	$65.00	
	PO#:	Voucher #:	75348	Invoice	Invoice No: G&B VarOfficial	1/7/2022	Paid Amt: $130.00
				E 01 300 296 052 000 305	Girls Basketball Consulting Fees/Serv	$70.00	
	PO#:	Voucher #:	75349	Invoice	Invoice No: JV GBBOfficial	1/7/2022	Paid Amt: $70.00
							Check Amount: $200.00
0108	GEN1	39444	6673		GOVE, GEORGE		Check
				E 01 300 294 052 000 305	Boys Basketball Consulting Fees/Serv	$57.50	
				E 01 300 296 052 000 305	Girls Basketball Consulting Fees/Serv	$57.50	
	PO#:	Voucher #:	75350	Invoice	Invoice No: G&B JVOfficial	1/7/2022	Paid Amt: $115.00
				E 01 300 294 052 000 305	Boys Basketball Consulting Fees/Serv	$65.00	
				E 01 300 296 052 000 305	Girls Basketball Consulting Fees/Serv	$65.00	
	PO#:	Voucher #:	75351	Invoice	Invoice No: G&B VarOfficial	1/7/2022	Paid Amt: $130.00
							Check Amount: $245.00
0108	GEN1	39445	5828		GRAMS, COLLIN		Check
				E 01 300 294 052 000 305	Boys Basketball Consulting Fees/Serv	$57.50	
				E 01 300 296 052 000 305	Girls Basketball Consulting Fees/Serv	$57.50	
	PO#:	Voucher #:	75352	Invoice	Invoice No: B&G JVOfficial	1/7/2022	Paid Amt: $115.00
							Check Amount: $115.00
0108	GEN1	39446	5274		GRAMS, RYAN		Check
				E 01 300 296 052 000 305	Girls Basketball Consulting Fees/Serv	$80.00	
	PO#:	Voucher #:	75353	Invoice	Invoice No: GBBOfficial	1/7/2022	Paid Amt: $80.00
							Check Amount: $80.00
0108	GEN1	39447	5124		HAAS, CASEY		Check
				E 01 300 296 052 000 305	Girls Basketball Consulting Fees/Serv	$80.00	
	PO#:	Voucher #:	75354	Invoice	Invoice No: VarGBBOfficial	1/7/2022	Paid Amt: $80.00
							Check Amount: $80.00
0108	GEN1	39448	6674		IHNE, MERLE		Check
				E 01 300 294 052 000 305	Boys Basketball Consulting Fees/Serv	$125.00	
	PO#:	Voucher #:	75355	Invoice	Invoice No: VarBBBOfficial	1/7/2022	Paid Amt: $125.00
							Check Amount: $125.00
0108	GEN1	39449	5800		KOPPI, BILL		Check
				E 01 300 294 052 000 305	Boys Basketball Consulting Fees/Serv	$65.00	
				E 01 300 296 052 000 305	Girls Basketball Consulting Fees/Serv	$65.00	
	PO#:	Voucher #:	75356	Invoice	Invoice No: B&GVarOfficial	1/7/2022	Paid Amt: $130.00
				E 01 300 294 052 000 305	Boys Basketball Consulting Fees/Serv	$57.50	
				E 01 300 296 052 000 305	Girls Basketball Consulting Fees/Serv	$57.50	
	PO#:	Voucher #:	75357	Invoice	Invoice No: B&GJVOfficial	1/7/2022	Paid Amt: $115.00
				E 01 300 294 052 000 305	Boys Basketball Consulting Fees/Serv	$62.00	
	PO#:	Voucher #:	75358	Invoice	Invoice No: C BBBOfficial	1/7/2022	Paid Amt: $62.00
							Check Amount: $307.00
0108	GEN1	39450	5799		LANGE, JEFF		Check
				E 01 300 294 052 000 305	Boys Basketball Consulting Fees/Serv	$57.50	
				E 01 300 296 052 000 305	Girls Basketball Consulting Fees/Serv	$57.50	
	PO#:	Voucher #:	75359	Invoice	Invoice No: B&G JVOfficial	1/7/2022	Paid Amt: $115.00
							Check Amount: $115.00

Norwood-Young America School
January 2022 Miscellaneous Payments

Co	Bank	Check No	Code	Rcd	Vendor	Pmt/Void Date	Pmt Type
0108	GEN1	39451	6009		MOYNAGH, ROBERT		Check
				E 01 300 294 052 000 305	Boys Basketball Consulting Fees/Serv	$57.50	
				E 01 300 296 052 000 305	Girls Basketball Consulting Fees/Serv	$57.50	
	PO#:	Voucher #:	75360	Invoice	Invoice No: B&G JVOfficial	1/7/2022	Paid Amt: $115.00
							Check Amount: $115.00
0108	GEN1	39452	4974		NORNES, CASEY		Check
				E 01 300 294 052 000 305	Boys Basketball Consulting Fees/Serv	$57.50	
				E 01 300 296 052 000 305	Girls Basketball Consulting Fees/Serv	$57.50	
	PO#:	Voucher #:	75361	Invoice	Invoice No: B&G JVOfficial	1/7/2022	Paid Amt: $115.00
							Check Amount: $115.00
0108	GEN1	39453	4767		PAGGEN, TONY		Check
				E 01 300 294 052 000 305	Boys Basketball Consulting Fees/Serv	$57.50	
				E 01 300 296 052 000 305	Girls Basketball Consulting Fees/Serv	$57.50	
	PO#:	Voucher #:	75362	Invoice	Invoice No: B&G JVOfficial	1/7/2022	Paid Amt: $115.00
				E 01 300 294 052 000 305	Boys Basketball Consulting Fees/Serv	$62.00	
	PO#:	Voucher #:	75363	Invoice	Invoice No: C BBBOfficial	1/7/2022	Paid Amt: $62.00
							Check Amount: $177.00
0108	GEN1	39454	4398		PARPART, NATE		Check
				E 01 300 296 052 000 305	Girls Basketball Consulting Fees/Serv	$80.00	
	PO#:	Voucher #:	75364	Invoice	Invoice No: GBB VarOfficial	1/7/2022	Paid Amt: $80.00
							Check Amount: $80.00
0108	GEN1	39455	6675		PERRY, JOHN		Check
				E 01 300 294 052 000 305	Boys Basketball Consulting Fees/Serv	$57.50	
				E 01 300 296 052 000 305	Girls Basketball Consulting Fees/Serv	$57.50	
	PO#:	Voucher #:	75365	Invoice	Invoice No: B&G JVOfficial	1/7/2022	Paid Amt: $115.00
							Check Amount: $115.00
0108	GEN1	39456	6676		RISDALL, PAUL		Check
				E 01 300 296 052 000 305	Girls Basketball Consulting Fees/Serv	$125.00	
	PO#:	Voucher #:	75366	Invoice	Invoice No: GBBOfficial	1/7/2022	Paid Amt: $125.00
							Check Amount: $125.00
0108	GEN1	39457	2448		RYAN, SCOTT		Check
				E 01 300 296 052 000 305	Girls Basketball Consulting Fees/Serv	$125.00	
	PO#:	Voucher #:	75367	Invoice	Invoice No: GBBOfficial	1/7/2022	Paid Amt: $125.00
							Check Amount: $125.00
0108	GEN1	39458	4952		SCHEFF, GREG		Check
				E 01 300 294 052 000 305	Boys Basketball Consulting Fees/Serv	$65.00	
				E 01 300 296 052 000 305	Girls Basketball Consulting Fees/Serv	$65.00	
	PO#:	Voucher #:	75368	Invoice	Invoice No: B&G VarOfficial	1/7/2022	Paid Amt: $130.00
							Check Amount: $130.00
0108	GEN1	39459	6519		SIERRA, AMBER		Check
				E 01 300 296 052 000 305	Girls Basketball Consulting Fees/Serv	$125.00	
	PO#:	Voucher #:	75369	Invoice	Invoice No: GBBOfficial	1/7/2022	Paid Amt: $125.00
							Check Amount: $125.00
0108	GEN1	39460	4266		TRAEN, TODD		Check
				E 01 300 296 052 000 305	Girls Basketball Consulting Fees/Serv	$70.00	
	PO#:	Voucher #:	75370	Invoice	Invoice No: JV GBBOfficial	1/7/2022	Paid Amt: $70.00
							Check Amount: $70.00
0108	GEN1	39461	5275		WEBER, SAM		Check
				E 01 300 294 052 000 305	Boys Basketball Consulting Fees/Serv	$65.00	
				E 01 300 296 052 000 305	Girls Basketball Consulting Fees/Serv	$65.00	
	PO#:	Voucher #:	75371	Invoice	Invoice No: B&G VarOfficial	1/7/2022	Paid Amt: $130.00
				E 01 300 294 052 000 305	Boys Basketball Consulting Fees/Serv	$65.00	
				E 01 300 296 052 000 305	Girls Basketball Consulting Fees/Serv	$65.00	
	PO#:	Voucher #:	75372	Invoice	Invoice No: B&G VarOfficial	1/7/2022	Paid Amt: $130.00
							Check Amount: $260.00
0108	GEN1	39462	1038		WITTERSCHEIN, JOE		Check
				E 01 300 294 052 000 305	Boys Basketball Consulting Fees/Serv	$125.00	
	PO#:	Voucher #:	75373	Invoice	Invoice No: BBBOfficial	1/7/2022	Paid Amt: $125.00
							Check Amount: $125.00
0108	GEN1	39463	4583		WROGE, DAVID		Check
				E 01 300 296 052 000 305	Girls Basketball Consulting Fees/Serv	$62.00	
	PO#:	Voucher #:	75374	Invoice	Invoice No: C GBBOfficial	1/7/2022	Paid Amt: $62.00
							Check Amount: $62.00
0108	GEN1	39464	3213		CENTURYLINK		Check
				E 01 100 810 000 000 320	Elem Communication/Phone	$174.30	
				E 01 200 810 000 000 320	MS Communication/Phone	$174.29	
				E 01 300 810 000 000 320	HS Communication/Phone	$174.29	
				E 04 005 505 000 321 320	CE General Communication/Phone	$100.00	
	PO#:	Voucher #:	75420	Invoice	Invoice No: 313866160	1/11/2022	Paid Amt: $622.88
							Check Amount: $622.88

Norwood-Young America School
January 2022 Miscellaneous Payments

Co	Bank	Check No	Code	Rcd	Vendor	Pmt/Void Date	Pmt Type
0108	GEN1	39465	2382		CITY OF COLOGNE		Check
				E 04 005 590 003 000 330	Preschool Utility Services	$62.61	
	PO#:	Voucher #:	75421	Invoice	Invoice No: 581	1/11/2022	Paid Amt: $62.61
							Check Amount: $62.61
0108	GEN1	39466	6437		FP MAILING SOLUTIONS		Check
				E 01 005 850 000 302 580	Principal on Cap. Lease/Instal	$165.00	
	PO#:	Voucher #:	75422	Invoice	Invoice No: RI105161073	1/11/2022	Paid Amt: $165.00
							Check Amount: $165.00
0108	GEN1	39467	4776		GUSTAFSON, ZACH		Check
				E 01 200 292 049 000 305	MS Athletics Consulting Fees/Serv	$40.00	
	PO#:	Voucher #:	75423	Invoice	Invoice No: MS GBBOfficial	1/11/2022	Paid Amt: $40.00
							Check Amount: $40.00
0108	GEN1	39468	07047		ISD #110 - WACONIA SCHOOL		Check
				E 01 100 630 000 000 320	CarverLink	$5,665.00	
				E 01 200 630 000 000 320	CarverLink	$5,665.00	
				E 01 300 630 000 000 320	CarverLink	$5,665.00	
				E 01 100 630 000 000 320	e-rate credit	($3,776.23)	
				E 01 200 630 000 000 320	e-rate credit	($3,776.23)	
				E 01 300 630 000 000 320	e-rate credit	($3,776.24)	
				R 01 005 000 000 000 021	Telecommunications Access Equity Aid credit	($4,593.36)	
	PO#: 22171	Voucher #:	75424	Invoice	Invoice No: FY22 CarverLink	1/11/2022	Paid Amt: $1,072.94
							Check Amount: $1,072.94
0108	GEN1	39469	6545		MARCO TECHNOLOGIES LLC		Check
				E 01 005 850 000 302 580	December Copy and Printing Contract	$2,346.81	
	PO#: 21838	Voucher #:	75425	Invoice	Invoice No: 461052375	1/11/2022	Paid Amt: $2,346.81
							Check Amount: $2,346.81
0108	GEN1	39470	4096		REGENTS - UNIV. OF MINNESOTA		Check
				E 01 300 865 000 347 305	Hazardous Waste Pick-up on 6-15-2021	$485.05	
	PO#: 22170	Voucher #:	75426	Invoice	Invoice No: 0430006045	1/11/2022	Paid Amt: $485.05
							Check Amount: $485.05
0108	GEN1	39471	4219		SOUTHERN MINNESOTA INSPECTION		Check
				E 01 300 865 000 347 305	Annual Inspection of Gym Equipment	$1,268.10	
				E 01 100 865 000 347 305	Annual Inspection of Gym Equipment	$422.70	
	PO#: 22175	Voucher #:	75427	Invoice	Invoice No: 18472	1/11/2022	Paid Amt: $1,690.80
							Check Amount: $1,690.80
0108	GEN1	39472	6252		T-MOBILE		Check
				E 01 300 810 000 000 320		$816.00	
				E 01 200 810 000 000 320		$792.00	
				E 01 100 810 000 000 320		$792.00	
	PO#:	Voucher #:	75428	Invoice	Invoice No: 969563964	1/11/2022	Paid Amt: $2,400.00
							Check Amount: $2,400.00
0108	GEN1	39473	6508		BINGHAM, MARK		Check
				E 01 300 294 052 000 305	Boys Basketball Consulting Fees/Serv	$125.00	
	PO#:	Voucher #:	75435	Invoice	Invoice No: VarBoysBBOffiical	1/13/2022	Paid Amt: $125.00
							Check Amount: $125.00
0108	GEN1	39474	6680		BRINKMAN, OWEN/RIDGEWATER COLLEGE		Check
				E 08 005 960 000 340 898	Scholarships	$200.00	
	PO#:	Voucher #:	75436	Invoice	Invoice No: HNSWWMemorial Schola	1/13/2022	Paid Amt: $200.00
							Check Amount: $200.00
0108	GEN1	39475	4459		CENTRAL GIRLS BASKETBALL BOOSTERS		Check
				E 04 005 560 017 321 305	Raiders Youth Basketball Camp	$2,099.00	
	PO#: 22197	Voucher #:	75437	Invoice	Invoice No: YouthBasketballCamp	1/13/2022	Paid Amt: $2,099.00
							Check Amount: $2,099.00
0108	GEN1	39476	6682		CONNOR, JOSEPH		Check
				E 01 300 294 052 000 305	Boys Basketball Consulting Fees/Serv	$125.00	
	PO#:	Voucher #:	75438	Invoice	Invoice No: VarBBBOffiical	1/13/2022	Paid Amt: $125.00
							Check Amount: $125.00
0108	GEN1	39477	6681		CROWN, RACHEL/UNIVERSITY OF SIOUX FALLS		Check
				E 08 005 960 000 340 898	Scholarships	$250.00	
	PO#:	Voucher #:	75439	Invoice	Invoice No: KoppFamilyScholarshi	1/13/2022	Paid Amt: $250.00
							Check Amount: $250.00
0108	GEN1	39478	6678		GLANDER, HAYDEN/BETHEL UNIVERSITY		Check
				E 08 005 960 000 340 898	Scholarships	$200.00	
	PO#:	Voucher #:	75440	Invoice	Invoice No: BraunMemorialScholar	1/13/2022	Paid Amt: $200.00
							Check Amount: $200.00
0108	GEN1	39479	09326		MN ELEM. SCHOOL PRIN. ASSOC.		Check
				E 01 100 050 000 000 366	WInter Conference	$395.00	
	PO#: 22182	Voucher #:	75441	Invoice	Invoice No: 13006	1/13/2022	Paid Amt: $395.00
							Check Amount: $395.00

Norwood-Young America School
January 2022 Miscellaneous Payments

Co	Bank	Check No	Code	Rcd	Vendor	Pmt/Void Date	Pmt Type
0108	GEN1	39480	01530		MUSIC MART		Check
				E 01 300 258 259 000 350	1329508: Snare Drum	$55.00	
	PO#: 22159	Voucher #:	75442	Invoice	Invoice No: 1329508	1/13/2022	Paid Amt: $55.00
				E 01 300 258 259 000 350	1339865: Key Guard Screws	$11.70	
	PO#: 22159	Voucher #:	75443	Invoice	Invoice No: 1339865	1/13/2022	Paid Amt: $11.70
				E 01 300 258 259 000 350	1341169: Tenor Sax	$60.00	
	PO#: 22159	Voucher #:	75444	Invoice	Invoice No: 1341169	1/13/2022	Paid Amt: $60.00
				E 01 200 258 259 000 430	1320836 - Concert Music: Up, Mr. Rodgers	$104.00	
	PO#: 22159	Voucher #:	75445	Invoice	Invoice No: 1320836	1/13/2022	Paid Amt: $104.00
				E 01 300 258 259 000 430	1322722 - Concert Music: In all its Glory et al.	$156.60	
				E 01 300 258 259 000 430	1323013 - Jazz Band: Bleak Midwinter	$43.20	
				E 01 300 258 259 000 430	Concert BAnd: Creed	$48.00	
	PO#: 22159	Voucher #:	75446	Invoice	Invoice No: 1322722	1/13/2022	Paid Amt: $247.80
							Check Amount: $478.50
0108	GEN1	39481	4975		NYGAARD, SCOTT		Check
				E 01 300 294 052 000 305	Boys Basketball Consulting Fees/Serv	$125.00	
	PO#:	Voucher #:	75447	Invoice	Invoice No: VarBBBOfficial	1/13/2022	Paid Amt: $125.00
							Check Amount: $125.00
0108	GEN1	39482	00955		WEST MUSIC		Check
				E 01 300 258 258 000 430	HS Choir Instruct Supp	$13.10	
	PO#:	Voucher #:	75448	Invoice	Invoice No: SI2079932	1/13/2022	Paid Amt: $13.10
							Check Amount: $13.10
0108	GEN1	39489	01816		SECTION 4A		Check
				E 01 300 291 111 000 369	One Act Registration Fee	$200.00	
	PO#: 22192	Voucher #:	75469	Invoice	Invoice No: OneActRegistration	1/17/2022	Paid Amt: $200.00
							Check Amount: $200.00
0108	GEN1	39490	6684		AHRENDT, RILEY/MN STATE UNIVERSITY, MANKATO		Check
				E 08 005 960 000 340 898	Jeans for College Dreams Scholarhsip	$250.00	
	PO#:	Voucher #:	75545	Invoice	Invoice No: JeansforCollegeDream	1/19/2022	Paid Amt: $250.00
							Check Amount: $250.00
0108	GEN1	39491	6508		BINGHAM, MARK		Check
				E 01 300 294 052 000 305	Boys Basketball Consulting Fees/Serv	$125.00	
	PO#:	Voucher #:	75546	Invoice	Invoice No: BBBOfficial	1/19/2022	Paid Amt: $125.00
							Check Amount: $125.00
0108	GEN1	39492	3961		DETERMAN, ROBERT		Check
				E 01 300 296 052 000 305	Varsity	$80.00	
				E 01 300 296 052 000 305	C-Squad	$45.00	
	PO#:	Voucher #:	75547	Invoice	Invoice No: GBBOfficial	1/19/2022	Paid Amt: $125.00
							Check Amount: $125.00
0108	GEN1	39493	6685		GARRETT. SCOTT		Check
				E 01 300 294 052 000 305	Boys Basketball Consulting Fees/Serv	$125.00	
	PO#:	Voucher #:	75548	Invoice	Invoice No: BBBOfficial	1/19/2022	Paid Amt: $125.00
							Check Amount: $125.00
0108	GEN1	39494	01144		ISD #75 - ST. CLAIR SCHOOLS		Check
				E 01 300 291 066 000 369	Individual Team Registration	$45.00	
	PO#: 22225	Voucher #:	75549	Invoice	Invoice No: KnowBowlRegistration	1/19/2022	Paid Amt: $45.00
							Check Amount: $45.00
0108	GEN1	39495	00693		ISD #77 -MANKATO PUBLIC SCHOOL		Check
				E 01 300 291 066 000 369	Team Entry Fee, January 11	$30.00	
	PO#: 22178	Voucher #:	75550	Invoice	Invoice No: KnowBowlRegistration	1/19/2022	Paid Amt: $30.00
							Check Amount: $30.00
0108	GEN1	39496	1901		KORBA, JERRY		Check
				E 01 300 296 052 000 305	Girls Basketball Consulting Fees/Serv	$80.00	
	PO#:	Voucher #:	75551	Invoice	Invoice No: GBBOfficial	1/19/2022	Paid Amt: $80.00
							Check Amount: $80.00
0108	GEN1	39497	4411		MCDONOUGH, PATRICK		Check
				E 01 300 296 052 000 305	Varsity	$80.00	
				E 01 300 296 052 000 305	C-Squad	$45.00	
	PO#:	Voucher #:	75552	Invoice	Invoice No: GBBOfficial	1/19/2022	Paid Amt: $125.00
							Check Amount: $125.00
0108	GEN1	39498	1982		MN CLAY USA		Check
				E 01 300 212 000 000 430	F 10 Clear Transparent Pint Amaco Glaze	$50.25	
	PO#: 22195	Voucher #:	75553	Invoice	Invoice No: 125242	1/19/2022	Paid Amt: $50.25
							Check Amount: $50.25
0108	GEN1	39499	6677		SCHREMPP, LYDIA/MN STATE UNIVERSITY, MANKATO		Check
				E 08 005 960 000 340 898	Central Coaches Assoc.	$150.00	
	PO#:	Voucher #:	75554	Invoice	Invoice No: CentralCoachesAssoc	1/19/2022	Paid Amt: $150.00
							Check Amount: $150.00

Norwood-Young America School
January 2022 Miscellaneous Payments

Co	Bank	Check No	Code	Rcd	Vendor	Pmt/Void Date	Pmt Type
0108	GEN1	39500	5139		VOGEL, CORY		Check
				E 01 300 294 052 000 305	Boys Basketball Consulting Fees/Serv	$125.00	
	PO#:	Voucher #:	75555	Invoice	Invoice No: BBBOfficial	1/19/2022	Paid Amt: $125.00
							Check Amount: $125.00
0108	GEN1	39501	6679		WEINAND, JESSE/MN STATE UNIVERSITY, MANKATO		Check
				E 08 005 960 000 340 898	Central Coaches Assoc.	$150.00	
	PO#:	Voucher #:	75556	Invoice	Invoice No: CentralCoachesAssoc	1/19/2022	Paid Amt: $150.00
							Check Amount: $150.00
0108	GEN1	39502	4583		WROGE, DAVID		Check
				E 01 300 294 052 000 305	Boys Basketball Consulting Fees/Serv	$62.00	
	PO#:	Voucher #:	75557	Invoice	Invoice No: C BBBOfficial	1/19/2022	Paid Amt: $62.00
							Check Amount: $62.00
0108	GEN1	39503	2436		YAGER, MIKE		Check
				E 01 300 294 052 000 305	Boys Basketball Consulting Fees/Serv	$62.00	
	PO#:	Voucher #:	75558	Invoice	Invoice No: C BBBOfficial	1/19/2022	Paid Amt: $62.00
							Check Amount: $62.00
0108	GEN1	39504	00182		HOME SOLUTIONS UNLIMITED		Check
				E 04 005 582 002 344 430	Preschool supplies	$31.64	
	PO#: 22232	Voucher #:	75559	Invoice	Invoice No: 2272	1/19/2022	Paid Amt: $31.64
				E 01 300 212 610 000 430	Bone Sanded Grout	$13.99	
				E 01 300 212 610 000 430	Pewter Sanded Grout	$13.99	
				E 01 300 212 000 000 430	Safety Glasses	$28.99	
				E 01 300 212 000 000 430	e6000 Glue	$11.98	
	PO#: 22176	Voucher #:	75560	Invoice	Invoice No: 2272	1/19/2022	Paid Amt: $68.95
				E 01 300 291 065 000 401	Batteries for microphones	$13.49	
	PO#: 22243	Voucher #:	75561	Invoice	Invoice No: 2272	1/19/2022	Paid Amt: $13.49
				E 01 300 301 501 830 433	Gal Wht Enamel	$83.98	
				E 01 300 301 501 830 433	Knit Cover	$1.98	
				E 01 300 301 501 830 433	Poplar Dowel	$25.96	
				E 01 300 301 501 830 433	Brs Hinge	$22.41	
				E 01 300 301 501 830 433	Misc hardware	$14.95	
				E 01 300 301 501 830 433	Misc	$39.99	
	PO#: 22246	Voucher #:	75562	Invoice	Invoice No: 2272	1/19/2022	Paid Amt: $189.27
							Check Amount: $303.35
0108	GEN1	39555	5893		CASH		Check
				E 01 005 110 000 000 899	Additional Admission Boxes for Saturday Game	$1,100.00	
	PO#: 22267	Voucher #:	75565	Invoice	Invoice No: CashBoxes	1/28/2022	Paid Amt: $1,100.00
							Check Amount: $1,100.00
0108	GEN1	39556	6509		GRUSE, JACKSON		Check
				E 01 300 294 052 000 305	Boys Basketball Consulting Fees/Serv	$125.00	
	PO#:	Voucher #:	75566	Invoice	Invoice No: BBBOfficial	1/28/2022	Paid Amt: $125.00
							Check Amount: $125.00
0108	GEN1	39557	6620		IDEAL ENERGIES SOLAR LEASING 2021 LLC		Check
				E 01 005 850 000 302 580	Solar Array at Elementary School January	$406.79	
	PO#: 21747	Voucher #:	75567	Invoice	Invoice No: JanuaryLease	1/28/2022	Paid Amt: $406.79
							Check Amount: $406.79
0108	GEN1	39558	2037		INNOVATIVE OFFICE SOLUTIONS LLC		Check
				E 01 300 211 000 000 401	UNV79000 Staples, Chisel Point	$7.90	
				E 01 300 211 000 000 401	UNV51334 Masking Tape, 3/4"x60 yd, 6/pk	$11.78	
				E 01 300 211 000 000 401	UNV83436 Tape, 3/4"x1296"	$11.76	
				E 01 300 211 000 000 401	UNV10630 Legal Pads, Canary 8.5x11	$8.74	
				E 01 300 211 000 000 401	UNV12113 File Folders 1/3 cut Letter	$14.06	
				E 01 300 211 000 000 401	PAP3321131 Red Pens, Medium	$4.36	
				E 01 300 211 000 000 401	UNV55400 #2 Pencils	$4.74	
				E 01 300 211 000 000 401	UNV35264, 9x12 Brown Clasp Envelope, 28#	$7.52	
				E 01 300 211 000 000 401	SAN80001 Black Expo Markers	$47.56	
				E 01 300 211 000 000 401	SAN80004 Green Expo Markers	$47.56	
				E 01 300 211 000 000 401	SAN80003 Blue Expo Markers	$47.56	
				E 01 300 211 000 000 401	SAN80002 Red Expo Markers	$35.67	
				E 01 300 211 000 000 401	SAN81803 Dry Erase Cleaner	$24.60	
				E 01 300 211 000 000 401	SAN81506 Dry Erase Erasers	$11.88	
	PO#: 22217	Voucher #:	75568	Invoice	Invoice No: IN3627696	1/28/2022	Paid Amt: $285.69
				E 01 300 211 000 000 401	BIC-GSMG11-GN Green Pens	$5.18	
	PO#: 22217	Voucher #:	75569	Invoice	Invoice No: IN3632512	1/28/2022	Paid Amt: $5.18
							Check Amount: $290.87
0108	GEN1	39559	05692		ISD #2310 - SIBLEY EAST		Check
				E 01 300 291 066 000 369	Team Entry Fee	$30.00	
	PO#: 22261	Voucher #:	75570	Invoice	Invoice No: KnowBowl	1/28/2022	Paid Amt: $30.00
							Check Amount: $30.00

Norwood-Young America School
January 2022 Miscellaneous Payments

Co	Bank	Check No	Code	Rcd	Vendor	Pmt/Void Date	Pmt Type
0108	GEN1	39560	5163		KEGLER, MIKE		Check
				E 01 300 296 052 000 305	Girls Basketball Consulting Fees/Serv	$62.00	
PO#:		Voucher #:	75571	Invoice	Invoice No: C GBBOfficial	1/28/2022	Paid Amt: $62.00
							Check Amount: $62.00
0108	GEN1	39561	6691		KOHLS, TAYLOR/MN STATE UNIVERSITY, MANKATO		Check
				E 08 005 960 000 340 898	Kopp Family Scholarship	$250.00	
PO#:		Voucher #:	75572	Invoice	Invoice No: KoppFamilyScholarhsi	1/28/2022	Paid Amt: $250.00
							Check Amount: $250.00
0108	GEN1	39562	1901		KORBA, JERRY		Check
				E 01 300 296 052 000 305	Girls Basketball Consulting Fees/Serv	$125.00	
PO#:		Voucher #:	75573	Invoice	Invoice No: GBBOfficial	1/28/2022	Paid Amt: $125.00
							Check Amount: $125.00
0108	GEN1	39563	6689		LARKIN, RICHARD		Check
				E 01 300 296 052 000 305	Girls Basketball Consulting Fees/Serv	$125.00	
PO#:		Voucher #:	75574	Invoice	Invoice No: GBBOfficial	1/28/2022	Paid Amt: $125.00
				E 01 300 296 052 000 305	Girls Basketball Consulting Fees/Serv	$125.00	
PO#:		Voucher #:	75575	Invoice	Invoice No: GBBOfficial	1/28/2022	Paid Amt: $125.00
							Check Amount: $250.00
0108	GEN1	39564	6517		MEYER, RYAN		Check
				E 01 300 294 052 000 305	Boys Basketball Consulting Fees/Serv	$125.00	
PO#:		Voucher #:	75595	Invoice	Invoice No: BBBOfficial	1/28/2022	Paid Amt: $125.00
							Check Amount: $125.00
0108	GEN1	39565	00278		MN STATE HIGH SCHOOL LEAGUE		Check
				E 01 300 292 000 000 820	Activity Fee - Balance due credit given	$65.00	
PO#:		Voucher #:	75576	Invoice	Invoice No: 038679	1/28/2022	Paid Amt: $65.00
							Check Amount: $65.00
0108	GEN1	39566	6009		MOYNAGH, ROBERT		Check
				E 01 300 294 052 000 305	Boys Basketball Consulting Fees/Serv	$62.00	
PO#:		Voucher #:	75577	Invoice	Invoice No: C BBBOfficial	1/28/2022	Paid Amt: $62.00
							Check Amount: $62.00
0108	GEN1	39567	01530		MUSIC MART		Check
				E 01 200 258 258 000 430	Fields of Gold	$29.25	
PO#: 22260		Voucher #:	75578	Invoice	Invoice No: 1358873	1/28/2022	Paid Amt: $29.25
				E 01 200 258 259 000 430	Inv. 1335706 - Thunder Rods(percussion)	$19.99	
PO#: 22274		Voucher #:	75579	Invoice	Invoice No: 1335706	1/28/2022	Paid Amt: $19.99
				E 01 300 258 259 000 350	Inv. 1325311 Replacement Ligatures for School/I	$94.70	
PO#: 22274		Voucher #:	75580	Invoice	Invoice No: 1325311	1/28/2022	Paid Amt: $94.70
							Check Amount: $143.94
0108	GEN1	39568	6686		MUSSELL, ANNA		Check
				E 04 702 590 000 350 305	St Johns Hlth Consulting Fees/Serv	$1,322.50	
PO#:		Voucher #:	75581	Invoice	Invoice No: StJohns HealthServic	1/28/2022	Paid Amt: $1,322.50
							Check Amount: $1,322.50
0108	GEN1	39569	00289		NASCO		Check
				E 01 300 256 000 000 430	Fiskars Compass #9708147	$1.66	
				E 01 300 256 000 000 430	STAEDTLER® Compass #TB18076	$6.76	
				E 01 300 256 000 000 430	Ball-Bearing Compass #1100679	$1.06	
				E 01 300 256 000 000 430	Texas Instruments TI-84 Plus Graphing Calcular	$699.75	
PO#: 22233		Voucher #:	75582	Invoice	Invoice No: 215544	1/28/2022	Paid Amt: $709.23
							Check Amount: $709.23
0108	GEN1	39570	6690		OVERLIE, CHRISTOPHER		Check
				E 01 300 296 052 000 305	Girls Basketball Consulting Fees/Serv	$125.00	
PO#:		Voucher #:	75583	Invoice	Invoice No: GBBOfficial	1/28/2022	Paid Amt: $125.00
							Check Amount: $125.00
0108	GEN1	39571	4767		PAGGEN, TONY		Check
				E 01 300 296 052 000 305	Girls Basketball Consulting Fees/Serv	$62.00	
PO#:		Voucher #:	75584	Invoice	Invoice No: C GBBOfficial	1/28/2022	Paid Amt: $62.00
							Check Amount: $62.00
0108	GEN1	39572	6676		RISDALL, PAUL		Check
				E 01 300 296 052 000 305	Girls Basketball Consulting Fees/Serv	$125.00	
PO#:		Voucher #:	75585	Invoice	Invoice No: JV/Var GBBOfficial	1/28/2022	Paid Amt: $125.00
							Check Amount: $125.00
0108	GEN1	39573	2448		RYAN, SCOTT		Check
				E 01 300 294 056 000 305	Baseball Consulting Fees/Serv	$125.00	
PO#:		Voucher #:	75586	Invoice	Invoice No: BBBOfficial	1/28/2022	Paid Amt: $125.00
							Check Amount: $125.00
0108	GEN1	39574	5200		SHIBLEY, JEREMY		Check
				E 01 300 296 052 000 305	Girls Basketball Consulting Fees/Serv	$125.00	
PO#:		Voucher #:	75587	Invoice	Invoice No: GBBOfficial	1/28/2022	Paid Amt: $125.00
							Check Amount: $125.00

Norwood-Young America School
January 2022 Miscellaneous Payments

Co	Bank	Check No	Code	Rcd	Vendor	Pmt/Void Date	Pmt Type
0108	GEN1	39575	6688		SMITH, TYLER/GUSTAVUS ADOLPHUS COLLEGE		Check
				E 08 005 960 000 340 898	Ed Braun Memorial Scholarship	$200.00	
	PO#:	Voucher #:	75588	Invoice	Invoice No: EdBraunMemorialSchol	1/28/2022	Paid Amt: $200.00
							Check Amount: $200.00
0108	GEN1	39576	5287		SOUTHWEST METRO INTERMEDIATE DISTRICT 288		Check
				E 01 998 203 000 000 390	FY22 1st Qtr On-line Learning/SEE, Elementary	$5,417.88	
				E 01 998 211 000 000 390	FY22 1st Qtr On-line Learning/SEE, Middle Sch	$11,447.73	
				E 01 998 211 000 000 390	FY22 1st Qtr On-line Learning/SEE, High Schoc	$10,646.86	
	PO#:	Voucher #:	75589	Invoice	Invoice No: 3337	1/28/2022	Paid Amt: $27,512.47
							Check Amount: $27,512.47
0108	GEN1	39577	4979		ST. CROIX LUTHERAN ACADEMY		Check
				E 01 300 294 054 000 369	Wrestl Entry Fees/Student Trav	$50.00	
	PO#:	Voucher #:	75590	Invoice	Invoice No: WrestlingTourn	1/28/2022	Paid Amt: $50.00
							Check Amount: $50.00
0108	GEN1	39578	6527		VINKEMEIER, JEFF		Check
				E 01 300 296 052 000 305	Girls Basketball Consulting Fees/Serv	$125.00	
	PO#:	Voucher #:	75591	Invoice	Invoice No: GBBOfficial	1/28/2022	Paid Amt: $125.00
							Check Amount: $125.00
0108	GEN1	39579	5139		VOGEL, CORY		Check
				E 01 300 296 052 000 305	Girls Basketball Consulting Fees/Serv	$125.00	
	PO#:	Voucher #:	75592	Invoice	Invoice No: GBBOfficial	1/28/2022	Paid Amt: $125.00
							Check Amount: $125.00
0108	GEN1	39580	1038		WITTERSCHEIN, JOE		Check
				E 01 300 296 052 000 305	Girls Basketball Consulting Fees/Serv	$125.00	
	PO#:	Voucher #:	75593	Invoice	Invoice No: GBBOfficial	1/28/2022	Paid Amt: $125.00
							Check Amount: $125.00
0108	GEN1	39581	2436		YAGER, MIKE		Check
				E 01 300 294 052 000 305	Boys Basketball Consulting Fees/Serv	$62.00	
	PO#:	Voucher #:	75594	Invoice	Invoice No: C BBBOfficial	1/28/2022	Paid Amt: $62.00
							Check Amount: $62.00
0108	GEN1	39582	4946		BSN SPORTS LLC		Check
				E 01 300 294 052 000 401	D Mar/Wh-Elite Franchise Jersey	$1,008.00	
				E 01 300 294 052 000 401	D Mar/Wh-Practice Short 2	$540.00	
				E 01 300 294 052 000 401	Wh/D Mar-Dri-Fit Crossover Jersey	$864.00	
				E 01 300 294 052 000 401	Wh/D Mar-Dri-Fit Crossover Short	$630.00	
				E 01 300 294 052 000 401	D Mar/Wh-Reversible Tank	$1,875.00	
				E 01 300 294 052 000 401	Shipping	$59.07	
	PO#: 21839	Voucher #:	75596	Invoice	Invoice No: 914824331	1/28/2022	Paid Amt: $4,976.07
				E 01 300 292 000 000 402	Wrestling shorts uniforms- rotation	$2,190.33	
	PO#: 22275	Voucher #:	75597	Invoice	Invoice No: 915310388	1/28/2022	Paid Amt: $2,190.33
				E 01 300 292 000 000 402	Football uniforms - rotation	$2,714.30	
	PO#: 22275	Voucher #:	75598	Invoice	Invoice No: 914824339	1/28/2022	Paid Amt: $2,714.30
				E 01 300 294 056 000 401	Baseball pants	$739.12	
	PO#: 22275	Voucher #:	75599	Invoice	Invoice No: 914732442	1/28/2022	Paid Amt: $739.12
				E 01 005 105 000 000 401	Banner - VFW/American Legion Acknowledgeme	$231.89	
				E 01 005 105 000 000 401	Banner - VFW/American Legion Acknowledgeme	$319.06	
				E 01 005 105 000 000 401	Shipping	$29.38	
	PO#: 22272	Voucher #:	75600	Invoice	Invoice No: 915472913	1/28/2022	Paid Amt: $580.33
				E 01 300 294 052 000 401	Replacement basketball nets	$104.95	
				E 01 300 294 052 000 401	Replacement basketball nets	($104.95)	
				E 01 300 296 052 000 401	BSN basketball nets	$52.48	
				E 01 300 294 052 000 401	BSN basketball nets	$52.47	
	PO#: 22062	Voucher #:	75601	Invoice	Invoice No: 914810482	1/28/2022	Paid Amt: $104.95
							Check Amount: $11,305.10
0108	GEN1	39583	4007		DVS RENEWAL		Check
				E 01 300 810 000 000 401	Registration Renwal for 2013 Haul Trailer	$19.25	
	PO#: 22273	Voucher #:	75602	Invoice	Invoice No: 00-032334588	1/28/2022	Paid Amt: $19.25
							Check Amount: $19.25
0108	GEN1	39584	6687		ISD #640 - WABASSO PUBLIC SCHOOLS		Check
				E 01 300 294 054 000 369	Wrestling Tournament	$200.00	
	PO#: 22276	Voucher #:	75603	Invoice	Invoice No: WrestlingTournament	1/28/2022	Paid Amt: $200.00
							Check Amount: $200.00
							Report Total: $63,778.44

Finance Committee Report

February 28, 2022

Enrollment by Month

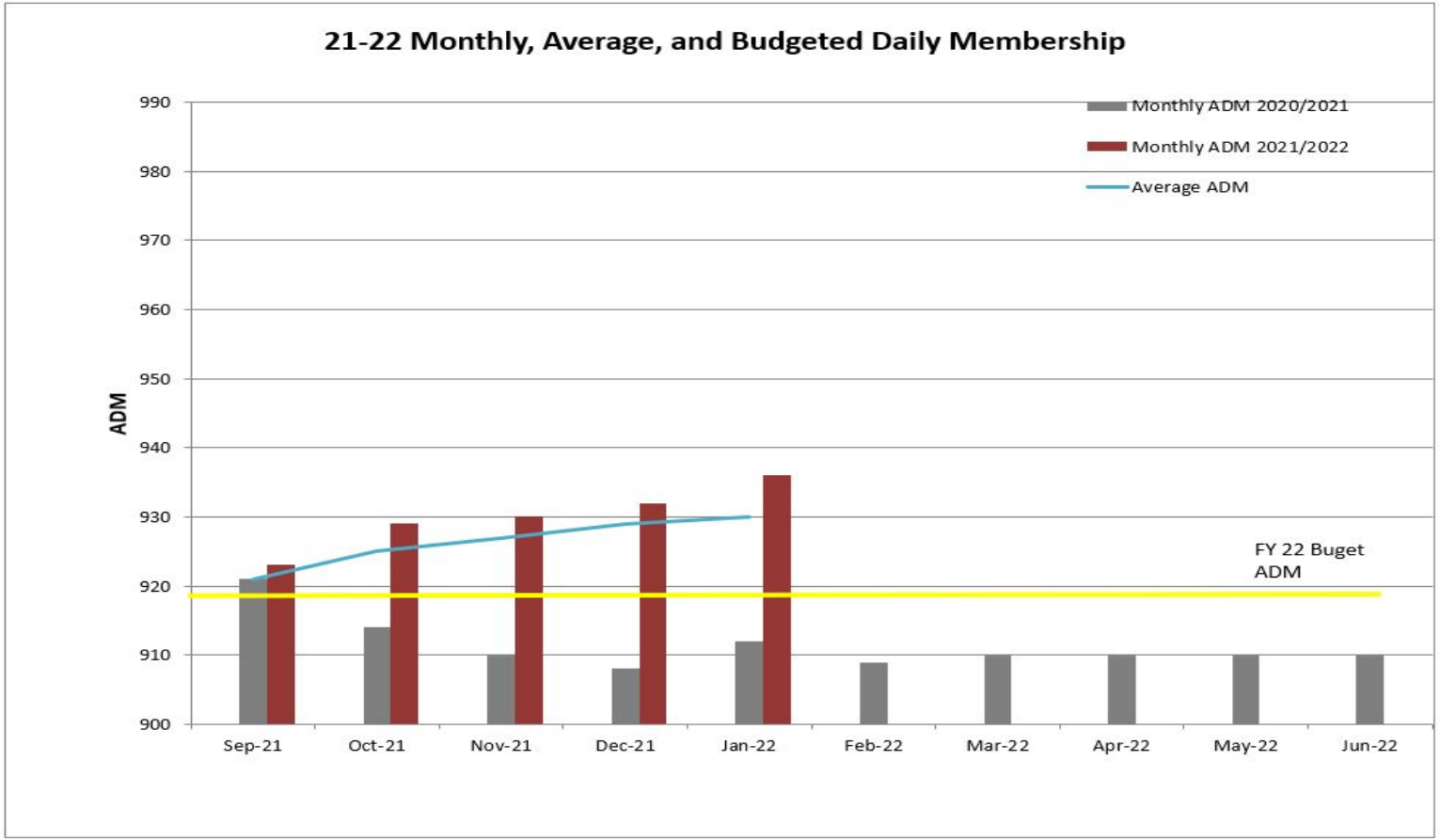

Revenues and Expense

January 2022 Data Using FY22 Adopted Budget

YTD Revenues	21-22 Revenue Budget	21-22 Revenue to Date	% of Budget	20-21 Revenue Budget	20-21 Revenue to Date	% of Budget
General Fund	$ 11,655,887	$ 5,239,570	45.0%	$ 11,509,854	$ 4,810,688	41.8%
Food Services	$ 488,031	$ 281,065	57.6%	$ 377,243	$ 149,394	39.6%
Community Services	$ 758,992	$ 476,343	62.8%	$ 722,304	$ 378,723	52.4%
Construction Fund	$ -	$ 9,997,953	0.0%	$ -	$ -	0.0%
Debt Services	$ 977,801	$ 426,751	43.6%	$ 988,392	$ 564,425	57.1%
Scholarships	$ 3,000	$ 3,553	118.4%	$ 3,000	$ 2,493	83.1%
Student Activities	$ -	$ 34,802	0.0%	$ -	$ 15,943	0.0%
Total Revenue	**$ 13,883,711**	**$ 16,460,037**	**118.6%**	**$ 13,600,793**	**$ 5,921,666**	**43.5%**

YTD Expenses	21-22 Expense Budget	21-22 Expenses to Date	% of Budget	20-21 Expense Budget	20-21 Expenses to Date	% of Budget
General Fund	$ 11,492,917	$ 5,670,380	49.3%	$ 11,876,623	$ 5,192,735	43.7%
Food Services	$ 468,691	$ 223,836	47.8%	$ 376,400	$ 163,821	43.5%
Community Services	$ 787,709	$ 476,257	60.5%	$ 769,323	$ 358,385	46.6%
Construction Fund	$ -	$ 141,044	0	$ -	$ -	$ -
Debt Services	$ 988,979	$ 984,529	99.6%	$ 990,303	$ 985,753	99.5%
Scholarships	$ 3,000	$ 2,650	88.3%	$ 3,000	$ 1,350	45.0%
Student Activities	$ -	$ 40,175		$ -	$ 22,200	0.0%
Total Expenses	**$ 13,741,296**	**$ 7,538,871**	**54.9%**	**$ 14,015,649**	**$ 6,724,244**	**48.0%**
Favorable/(Unfavorable)	**$ 142,415**	**$ 8,921,166**	**6264.20%**	**$ (414,856)**	**$ (802,578)**	**193.5%**

21-22 Fund Balance	Audited Fund Balance 7/1/21	21-22 Revenues to Date	21-22 Expenses to Date	Fund Balance 6/30/22	Favorable/ (Unfavorable)
General Fund	$ 2,371,332	$ 5,239,570	$ 5,670,380	$ 1,940,522	$ (430,810)
Food Services	$ 128,167	$ 281,065	$ 223,836	$ 185,396	$ 57,229
Community Services	$ 332,840	$ 476,343	$ 476,257	$ 332,926	$ 86
Construction Fund	$ -	$ 9,997,953	$ 141,044	$ 9,856,909	$ 9,856,909
Debt Services	$ 208,956	$ 426,751	$ 984,529	$ (348,822)	$ (557,778)
Scholarships	$ 33,584	$ 3,553	$ 2,650	$ 34,487	$ 903
Student Activities	$ 109,590	$ 34,802	$ 40,175	$ 104,217	$ (5,373)
Total Fund Balance	**$ 3,184,469**	**$ 16,460,037**	**$ 7,538,871**	**$ 12,105,635**	**$ 8,921,166**

ISD 108 Promise to Voters

Q1 Curriculum	Budget Remaining	Actual YTD
	73,850	81,106

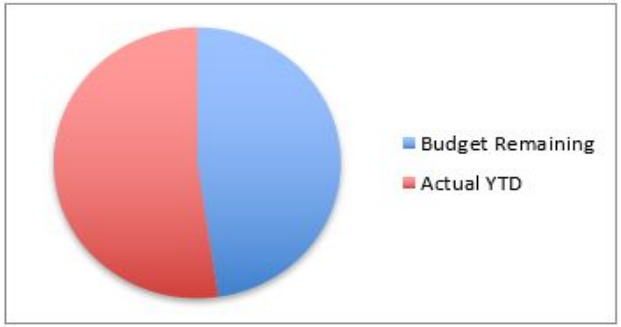

Q1 Staff Development	Budget Remaining	Actual YTD
	9130	59,538

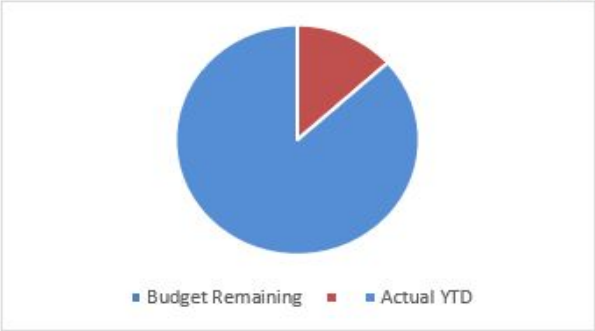

Q2 Tech Levy	Budget Remaining	Actual YTD
	24,591	326,572

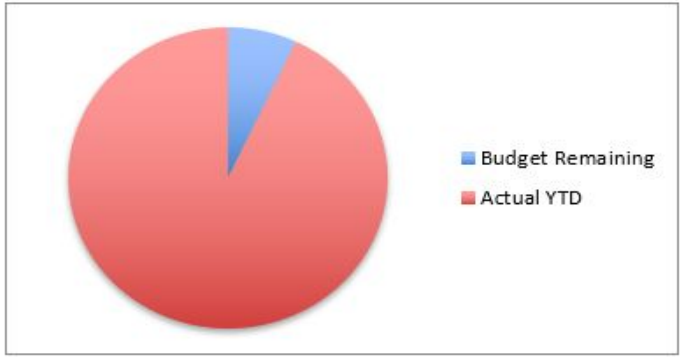

Q1 Maintain Class Size	Budget Remaining	Actual YTD
	144,905	202,867

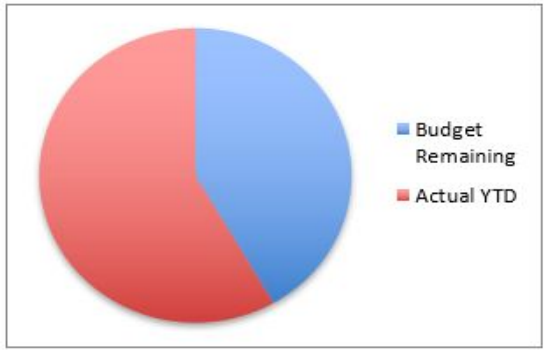

Upper Level Plan

Central Schools Master Planning

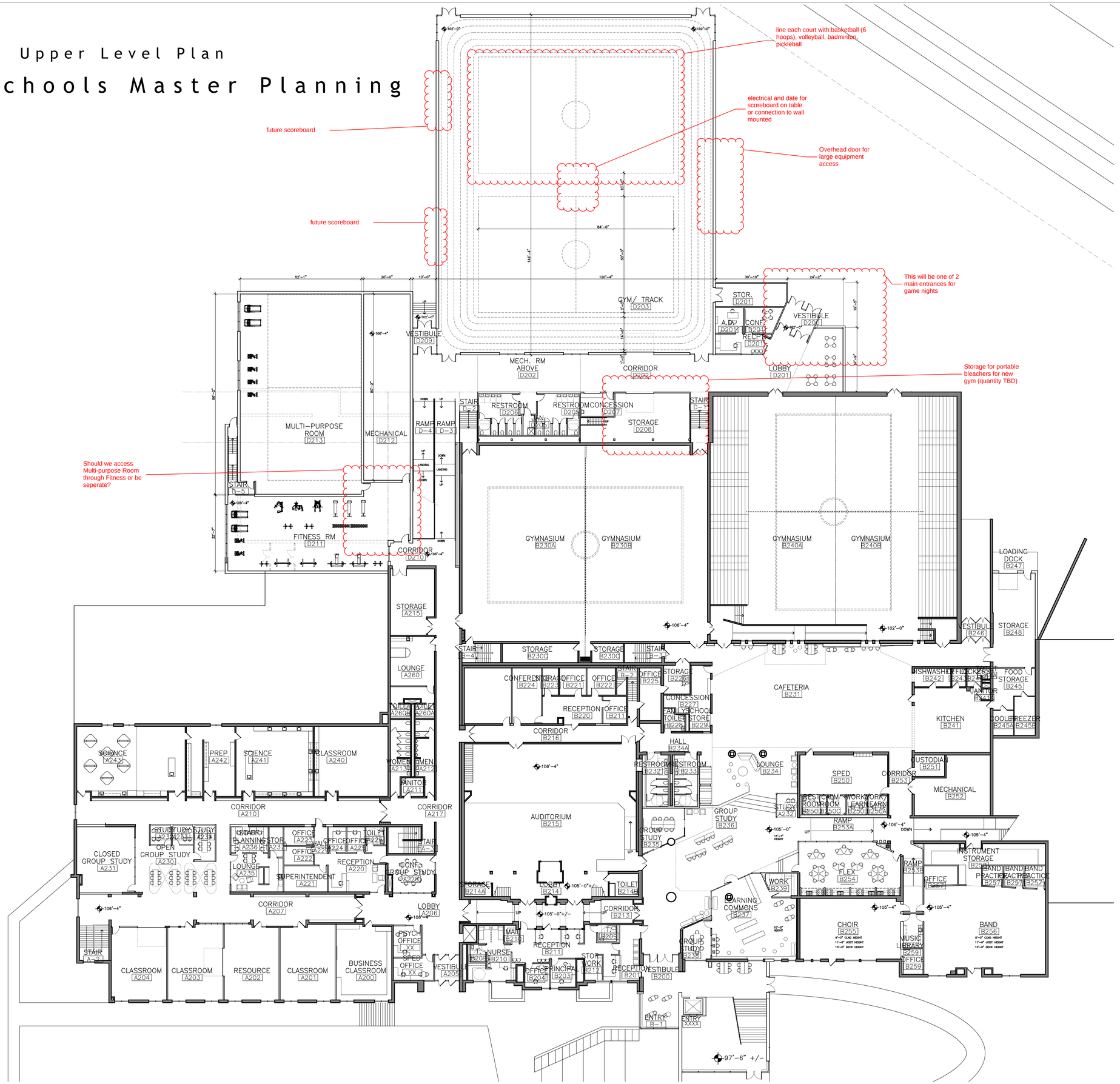

DATE: 31 JANUARY 2022
PROJECT NO.: 20001.001

SCALE: 1/16" = 1'-0"
SK.XX

HAY DOBBS

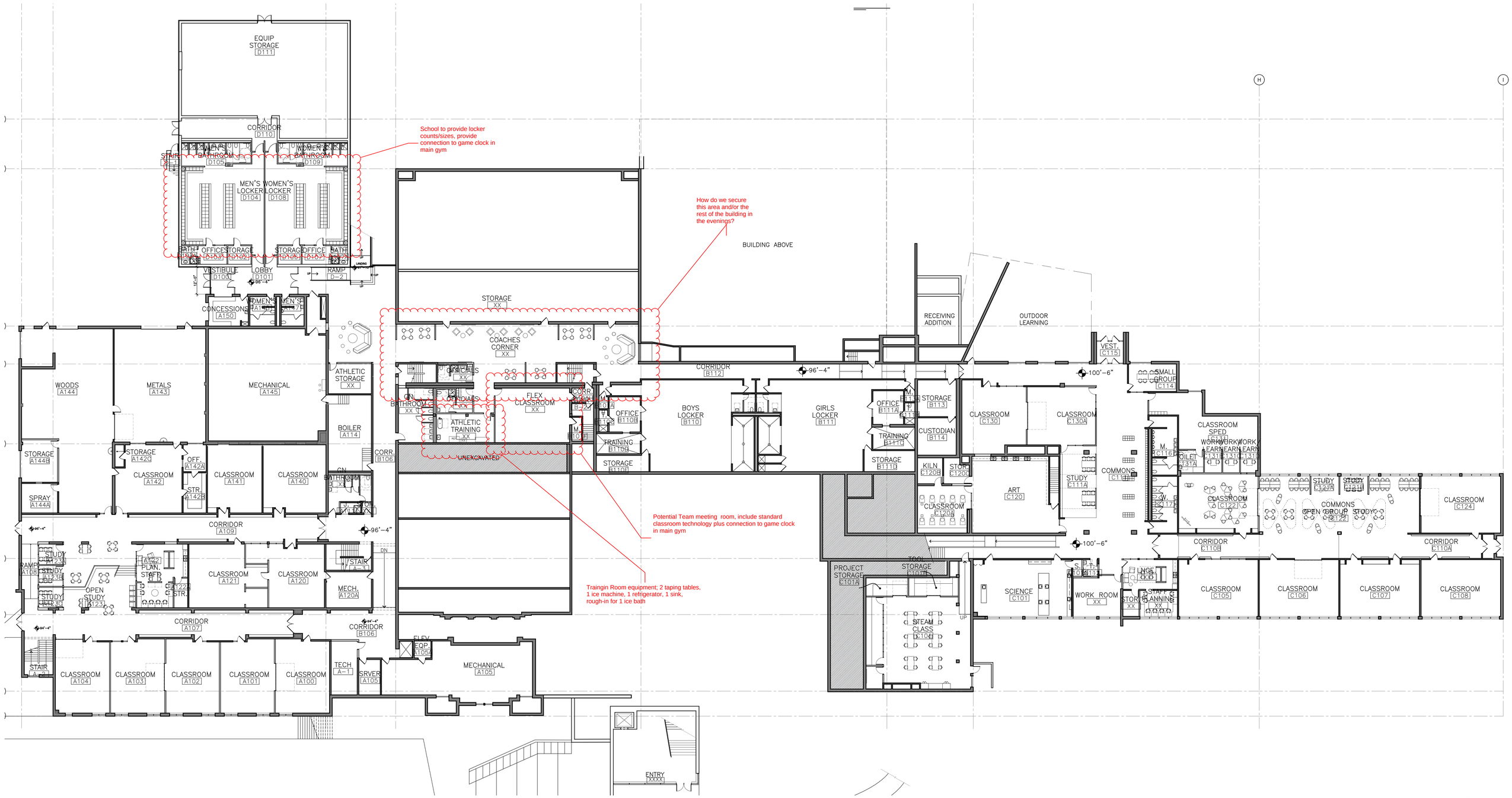

Lower Level Plan

Central Schools Master Planning

DATE: 31 JANUARY 2022
PROJECT NO.: 20001.001

SCALE: 1/16" = 1'-0"
SK.XX

HAY DOBBS

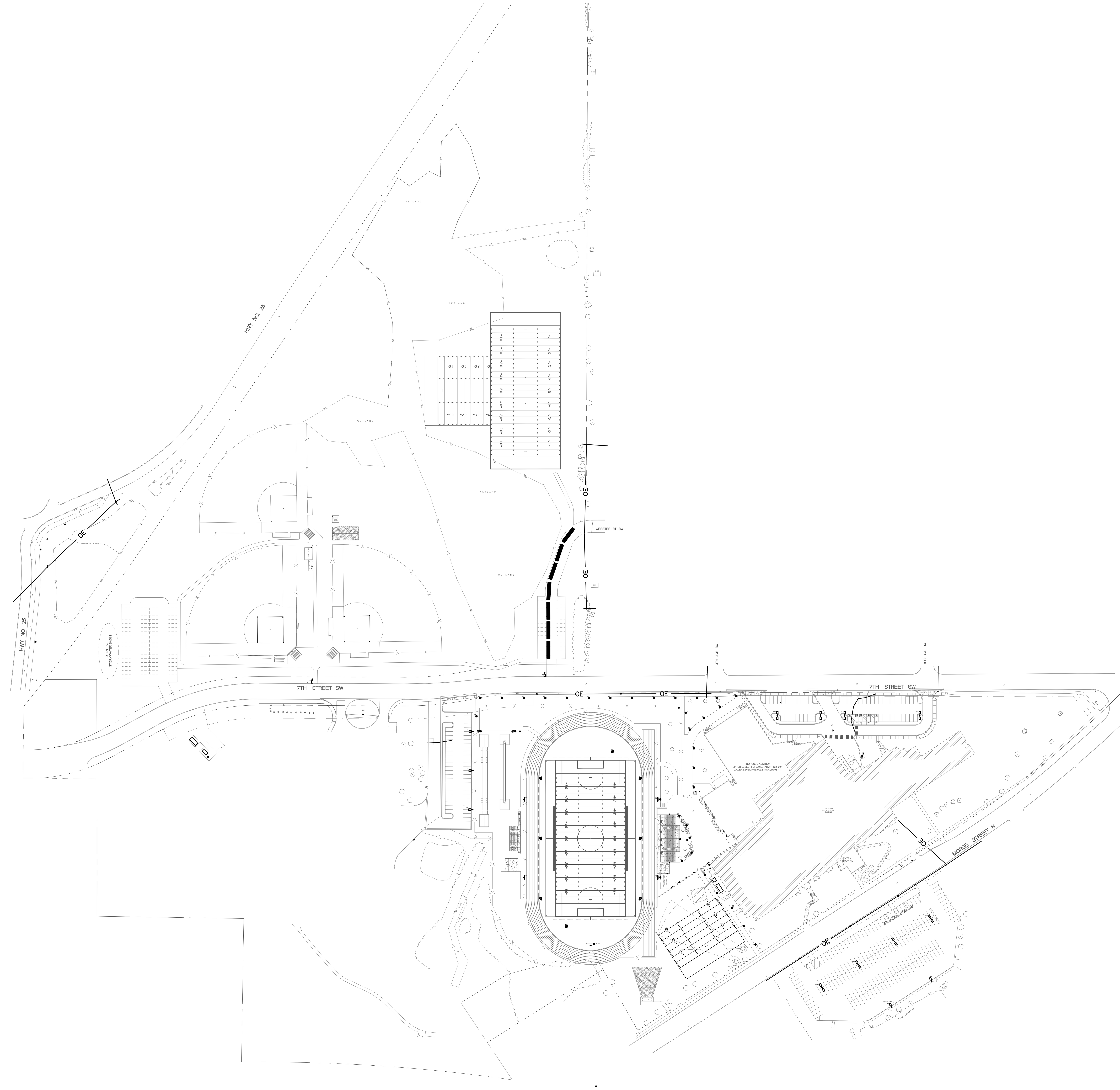

1
E101
OVERALL SITE PLAN - ELECTRICAL
1" = 100'-0"

NEXUS SOLUTIONS®

MADISON, WI
MILWAUKEE, WI
MAPLE GROVE, MN

THIS DRAWING IS PROPERTY OF NEXUS SOLUTIONS, LLC. USE OR REPRODUCTION WITHOUT WRITTEN PERMISSION IS PROHIBITED.

JB Electrical Design, P.C.
Electrical Consulting Engineers
6885 Sycamore Ln N, Suite 210
Maple Grove, MN 55369
763.486.0965
jeff@jbelectricaldesign.com
JBED Proj. No. 2022-05
©2021 by JB Electrical Design, PC

KEY PLAN

CENTRAL PUBLIC SCHOOLS ATHLETIC FIELDS AND SITE IMPROVEMENTS

531 MORSE ST. N.
NORWOOD YOUNG AMERICA, MN 55368

I HEREBY CERTIFY THAT THIS PLAN, SPECIFICATION, OR REPORT WAS PREPARED BY ME OR UNDER MY DIRECT SUPERVISION AND THAT I AM A DULY LICENSED PROFESSIONAL ENGINEER UNDER THE LAWS OF THE STATE OF MINNESOTA.

PRINTED NAME: Jeffery A. Blake

SIGNATURE:

DATE: -/-/2022 REG. NO. 41083

Date	Revision Description

PRELIMINARY DRAWINGS

DATE	x-xx-2022	PROJECT #	2022-05
DRAWN BY	RDO	CHECKED BY	JAB

DRAWING TITLE
OVERALL SITE PLAN - ELECTRICAL

DRAWING NUMBER
E101

© Nexus Solutions, LLC

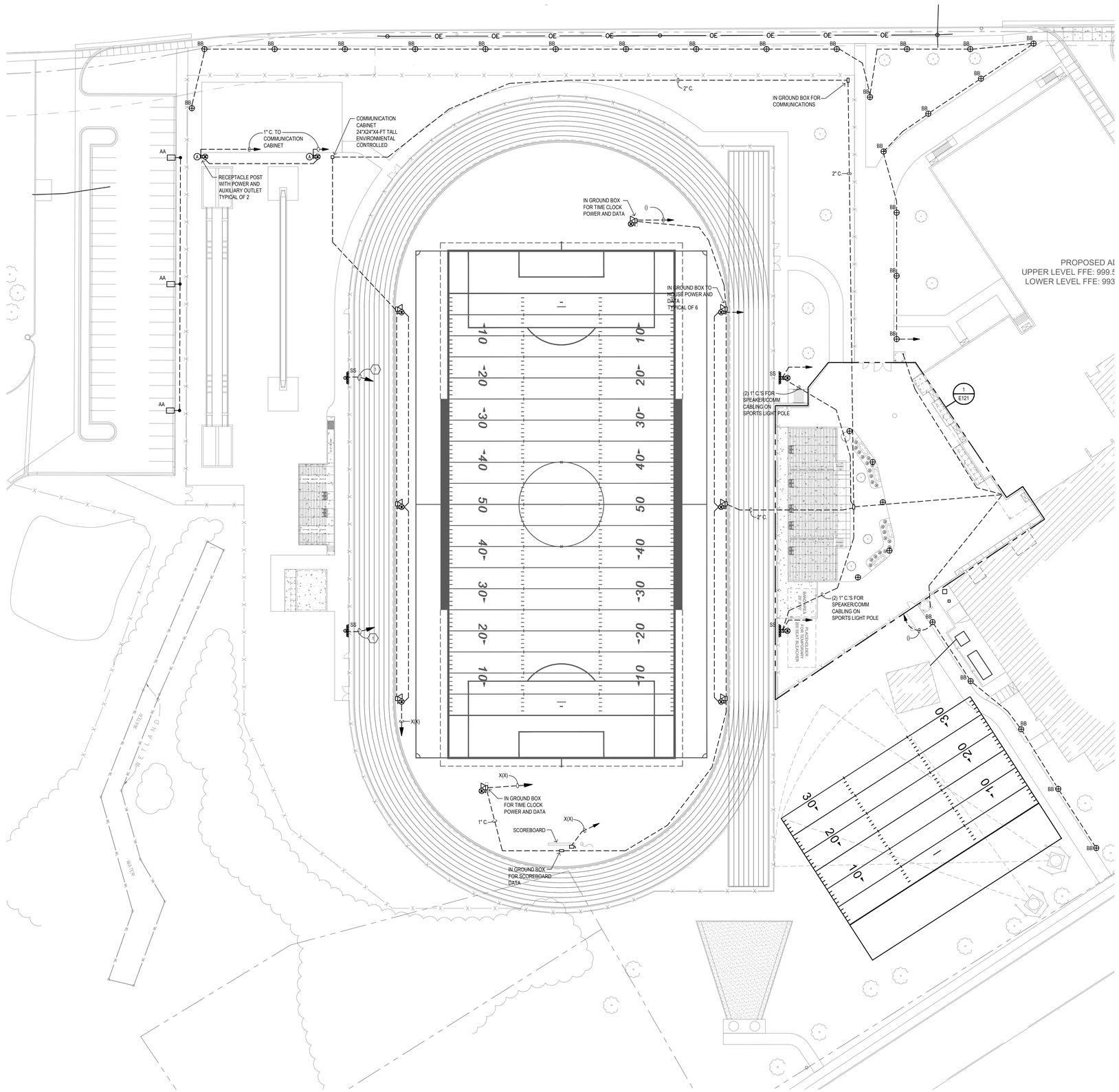

1 E111 SITE PLAN - SOUTH - ELECTRICAL

1" = 30'-0"

nexus SOLUTIONS®

MADISON, WI
MILWAUKEE, WI
MAPLE GROVE, MN

THIS DRAWING IS PROPERTY OF NEXUS SOLUTIONS, LLC. USE OR REPRODUCTION WITHOUT WRITTEN PERMISSION IS PROHIBITED.

JB Electrical Design, P.C.
Electrical Consulting Engineers
6885 Sycamore Ln N, Suite 210
Maple Grove, MN 55369
763.486.0965
jeff@jbelectricaldesign.com
JBED Proj. No. 2022-05
© 2021 by JB Electrical Design, PC

KEY PLAN

CENTRAL PUBLIC SCHOOLS ATHLETIC FIELDS AND SITE IMPROVEMENTS

531 MORSE ST. N.
NORWOOD YOUNG AMERICA, MN 55368

I HEREBY CERTIFY THAT THIS PLAN, SPECIFICATION, OR REPORT WAS PREPARED BY ME OR UNDER MY DIRECT SUPERVISION AND THAT I AM A DULY LICENSED PROFESSIONAL ENGINEER UNDER THE LAWS OF THE STATE OF MINNESOTA.

PRINTED NAME: Jeffery A. Blake

SIGNATURE:

DATE: -/-/2022 REG. NO. 41083

Date	Revision Description

PRELIMINARY DRAWINGS

DATE	x-xx-2022	PROJECT #	2022-05
DRAWN BY	RDO	CHECKED BY	JAB

DRAWING TITLE
SITE PLAN - SOUTH ELECTRICAL

DRAWING NUMBER
E111

© Nexus Solutions, LLC

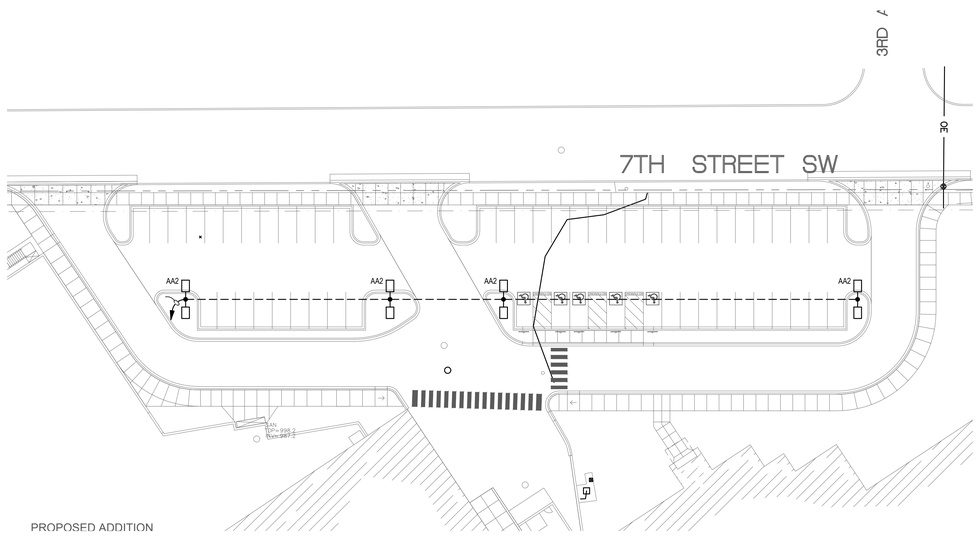

2 E112 SITE PLAN - NORTH PARKING LOT - ELECTRICAL

1" = 30'-0"

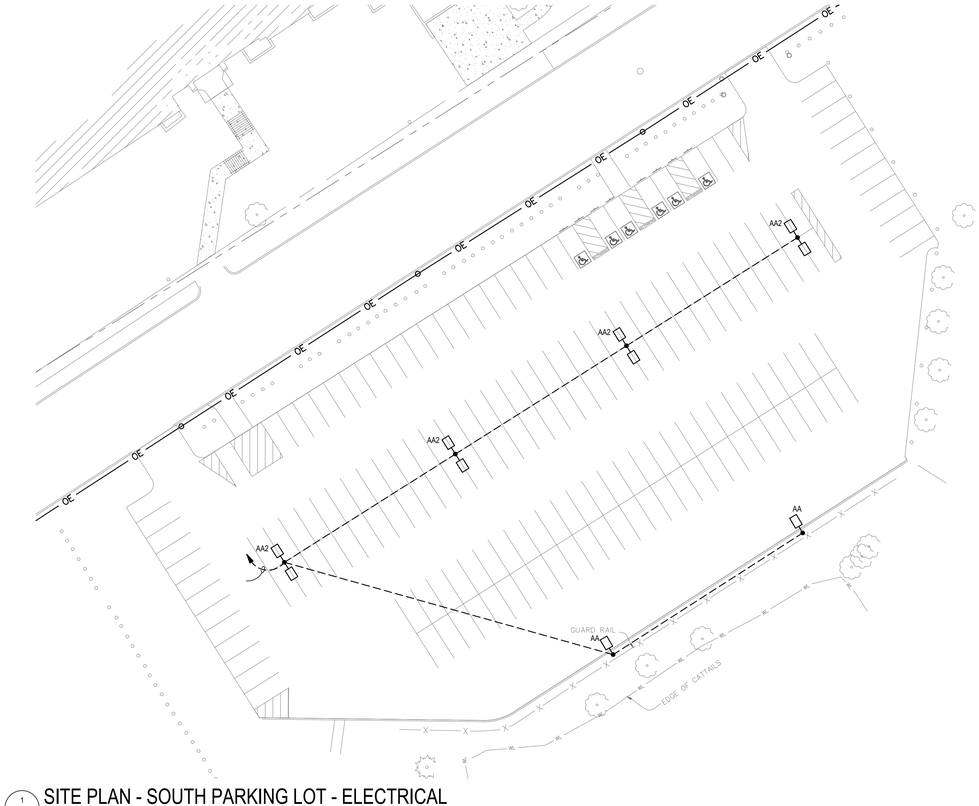

1 E112 SITE PLAN - SOUTH PARKING LOT - ELECTRICAL

1" = 30'-0"

nexus SOLUTIONS®

MADISON, WI
MILWAUKEE, WI
MAPLE GROVE, MN

THIS DRAWING IS PROPERTY OF NEXUS SOLUTIONS, LLC. USE OR REPRODUCTION WITHOUT WRITTEN PERMISSION IS PROHIBITED.

JB Electrical Design, P.C.
Electrical Consulting Engineers
6885 Sycamore Ln N, Suite 210
Maple Grove, MN 55369
763.486.0965
jeff@jbelectricaldesign.com
JBED Proj. No. 2022-05

©2021 by JB Electrical Design, PC

KEY PLAN

CENTRAL PUBLIC SCHOOLS
ATHLETIC FIELDS AND
SITE IMPROVEMENTS

531 MORSE ST. N.
NORWOOD YOUNG AMERICA, MN 55368

I HEREBY CERTIFY THAT THIS PLAN, SPECIFICATION, OR REPORT WAS PREPARED BY ME OR UNDER MY DIRECT SUPERVISION AND THAT I AM A DULY LICENSED PROFESSIONAL ENGINEER UNDER THE LAWS OF THE STATE OF MINNESOTA.

PRINTED NAME: Jeffery A. Blake

SIGNATURE:

DATE: -/-/2022 REG. NO. 41083

Date	Revision Description

PRELIMINARY DRAWINGS

DATE	x-xx-2022	PROJECT #	2022-05
DRAWN BY	RDO	CHECKED BY	JAB

DRAWING TITLE

SITE PLAN - PARKING LOTS ELECTRICAL

DRAWING NUMBER

E112

© Nexus Solutions, LLC

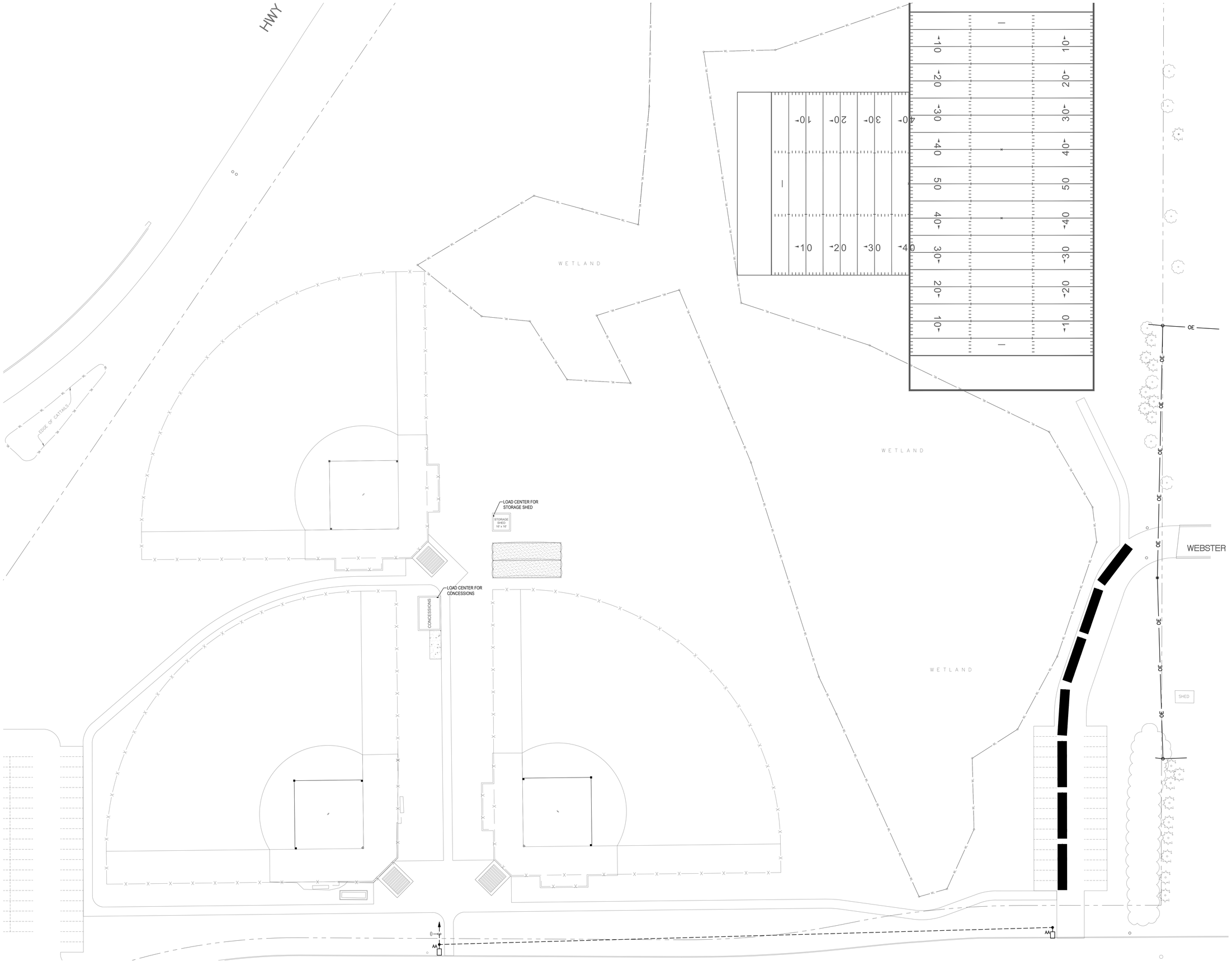

1 E113 SITE PLAN - NORTH - ELECTRICAL

1" = 30'-0"

nexus SOLUTIONS®

MADISON, WI
MILWAUKEE, WI
MAPLE GROVE, MN

THIS DRAWING IS PROPERTY OF NEXUS SOLUTIONS, LLC. USE OR REPRODUCTION WITHOUT WRITTEN PERMISSION IS PROHIBITED.

JB Electrical Design, P.C.
Electrical Consulting Engineers
6885 Sycamore Ln N, Suite 210
Maple Grove, MN 55369
763.486.0965
jeff@jbelectricaldesign.com
JBED Proj. No. 2022-05
©2021 by JB Electrical Design, PC

KEY PLAN

CENTRAL PUBLIC SCHOOLS ATHLETIC FIELDS AND SITE IMPROVEMENTS

531 MORSE ST. N.
NORWOOD YOUNG AMERICA, MN 55368

I HEREBY CERTIFY THAT THIS PLAN, SPECIFICATION, OR REPORT WAS PREPARED BY ME OR UNDER MY DIRECT SUPERVISION AND THAT I AM A DULY LICENSED PROFESSIONAL ENGINEER UNDER THE LAWS OF THE STATE OF MINNESOTA.

PRINTED NAME: Jeffery A. Blake

SIGNATURE:

DATE: -/-/2022 REG. NO. 41083

Date	Revision Description

PRELIMINARY DRAWINGS

DATE	x-xx-2022	PROJECT #	2022-05
DRAWN BY	RDO	CHECKED BY	JAB

DRAWING TITLE
SITE PLAN - NORTH ELECTRICAL

DRAWING NUMBER
E113

© Nexus Solutions, LLC

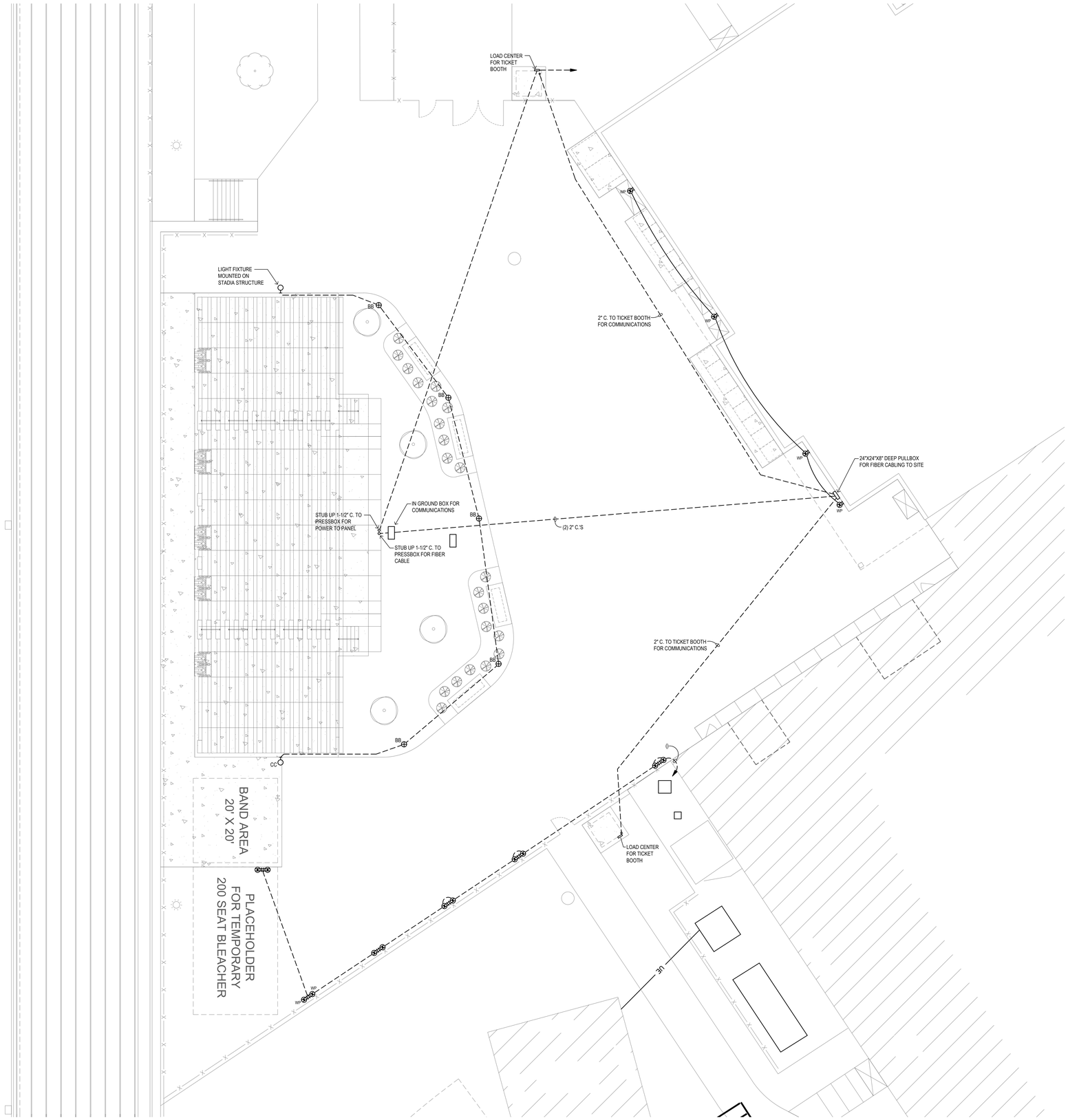

1 E121 ENLARGED SITE PLAN - PLAZA - ELECTRICAL
1" = 10'-0"

nexus SOLUTIONS®

MADISON, WI
MILWAUKEE, WI
MAPLE GROVE, MN

THIS DRAWING IS PROPERTY OF NEXUS SOLUTIONS, LLC. USE OR REPRODUCTION WITHOUT WRITTEN PERMISSION IS PROHIBITED.

JB Electrical Design, P.C.
Electrical Consulting Engineers
6885 Sycamore Ln N, Suite 210
Maple Grove, MN 55369
763.486.0965
jeff@jbelectricaldesign.com
JBED Proj. No. 2022-05
© 2021 by JB Electrical Design, PC

KEY PLAN

CENTRAL PUBLIC SCHOOLS ATHLETIC FIELDS AND SITE IMPROVEMENTS

531 MORSE ST. N.
NORWOOD YOUNG AMERICA, MN 55368

I HEREBY CERTIFY THAT THIS PLAN, SPECIFICATION, OR REPORT WAS PREPARED BY ME OR UNDER MY DIRECT SUPERVISION AND THAT I AM A DULY LICENSED PROFESSIONAL ENGINEER UNDER THE LAWS OF THE STATE OF MINNESOTA.

PRINTED NAME: Jeffery A. Blake
SIGNATURE:
DATE: -/-/2022 REG. NO. 41083

Date	Revision Description

PRELIMINARY DRAWINGS

DATE	x-xx-2022	PROJECT #	2022-05
DRAWN BY	RDO	CHECKED BY	JAB

DRAWING TITLE
ENLARGED SITE PLAN - PLAZA ELECTRICAL

DRAWING NUMBER
E121

© Nexus Solutions, LLC

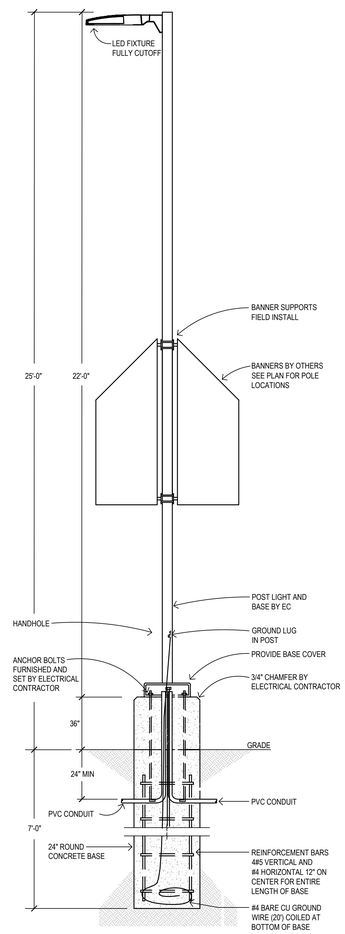

3 E141 SINGLE HEAD POLE DETAIL

NO SCALE

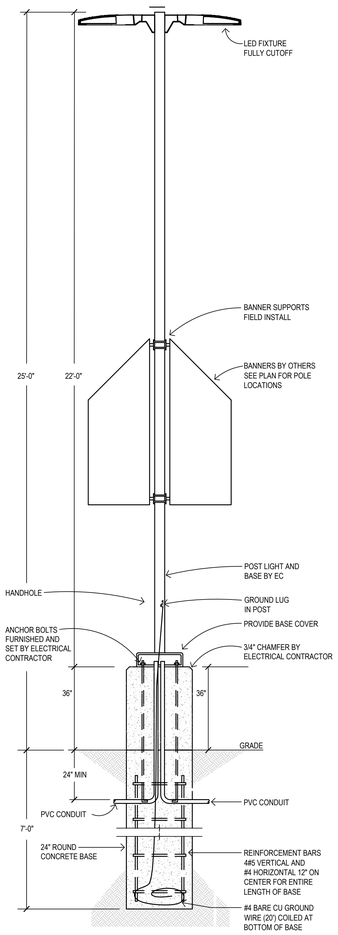

2 E141 TWIN HEAD POLE DETAIL

NO SCALE

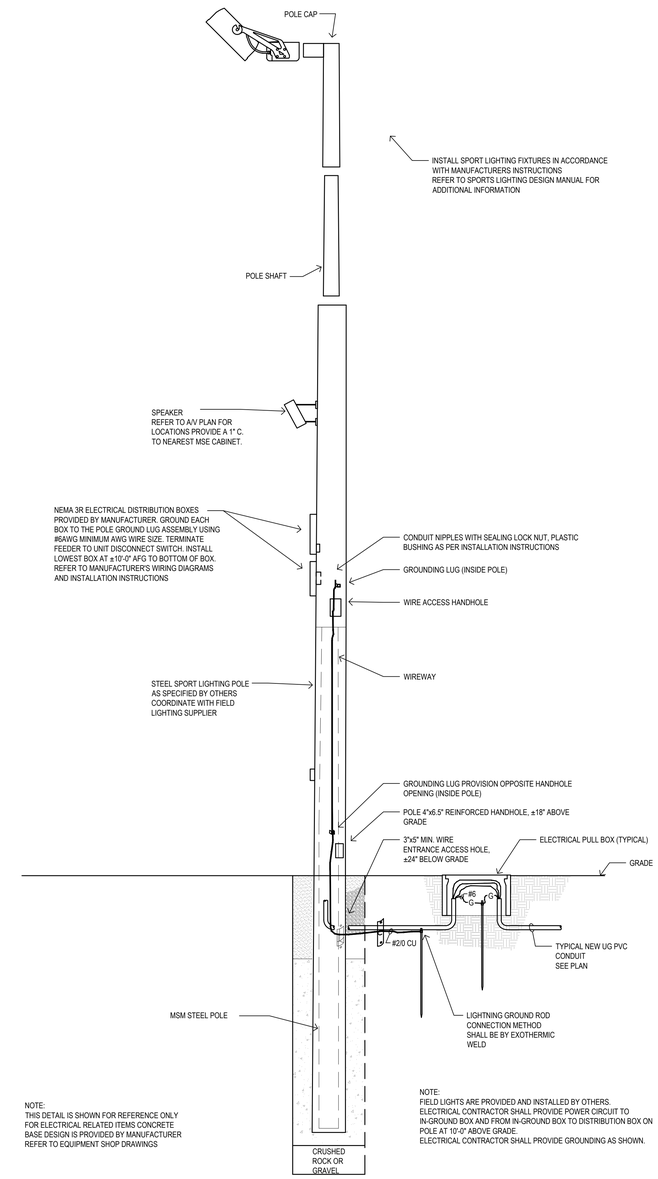

NOTE:
THIS DETAIL IS SHOWN FOR REFERENCE ONLY
FOR ELECTRICAL RELATED ITEMS CONCRETE
BASE DESIGN IS PROVIDED BY MANUFACTURER
REFER TO EQUIPMENT SHOP DRAWINGS

NOTE:
FIELD LIGHTS ARE PROVIDED AND INSTALLED BY OTHERS.
ELECTRICAL CONTRACTOR SHALL PROVIDE POWER CIRCUIT TO
IN-GROUND BOX AND FROM IN-GROUND BOX TO DISTRIBUTION BOX ON
POLE AT 10'-0" ABOVE GRADE.
ELECTRICAL CONTRACTOR SHALL PROVIDE GROUNDING AS SHOWN.

1 E141 SPORTS LIGHT POLE DETAIL

NO SCALE

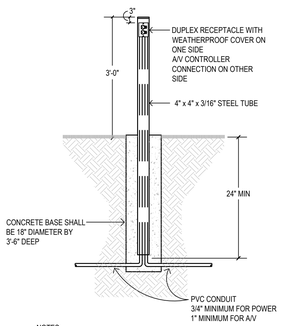

NOTES:
1. EC TO PRIME COAT AND PAINT 2 COATS. COLOR TO BE SELECTED BY ARCHITECT.
2. CONCRETE SHALL COMPLY WITH DIVISION 3 OF THE PROJECT. SPECIFICATIONS FOR 3000 PSI CONCRETE.

6 E141 RECEPTACLE PEDESTAL DETAIL

NO SCALE

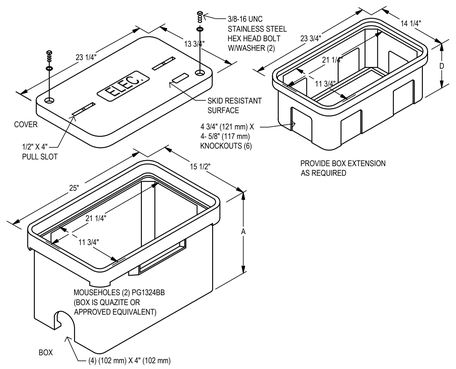

5 E141 IN GROUND BOX DETAIL

NO SCALE

nexus SOLUTIONS®

MADISON, WI
MILWAUKEE, WI
MAPLE GROVE, MN

THIS DRAWING IS PROPERTY OF
NEXUS SOLUTIONS, LLC. USE OR REPRODUCTION
WITHOUT WRITTEN PERMISSION IS PROHIBITED.

JB Electrical Design, P.C.
Electrical Consulting Engineers
6885 Sycamore Ln N, Suite 210
Maple Grove, MN 55369
763.486.0965
jeff@jbelectricaldesign.com
JBED Proj. No. 2022-05
© 2021 by JB Electrical Design, PC

KEY PLAN

CENTRAL PUBLIC SCHOOLS
ATHLETIC FIELDS AND
SITE IMPROVEMENTS

531 MORSE ST. N.
NORWOOD YOUNG AMERICA, MN 55368

I HEREBY CERTIFY THAT THIS PLAN, SPECIFICATION, OR REPORT WAS PREPARED BY ME OR UNDER MY DIRECT SUPERVISION AND THAT I AM A DULY LICENSED PROFESSIONAL ENGINEER UNDER THE LAWS OF THE STATE OF MINNESOTA.

PRINTED NAME: Jeffery A. Blake

SIGNATURE:

DATE: -/-/2022 REG. NO. 41083

Date	Revision Description

PRELIMINARY DRAWINGS

DATE	x-xx-2022	PROJECT #	2022-05
DRAWN BY	RDO	CHECKED BY	JAB

DRAWING TITLE
DETAILS

DRAWING NUMBER
E141

© Nexus Solutions, LLC

LUMINIS®

MA20 SERIES
MAYA - LED
Post Top

TYPE: _____ QUANTITY: _____ PROJECT: _____

CATALOG NUMBER:							
MODEL	LED LIGHT SELECTION	VOLTAGE	FINISH	OPTION	OPTION	OPTION	OPTION

MA20-90D

1- Cast aluminum LED heat sink.
2- Optical system assembly w/tempered glass lens.
3- Set of two cast aluminum supporting struts.
4- Removable cast aluminum cover for easy access to electrical components and driver.
5- Cast aluminum LED driver housing. Fits with 4" (102mm) or 5" (127mm) pole. 6" (152mm) O.D available on request.
6- Optional 90° strut position. (Option 90D)

*Optional Ø 30" aluminum shade. (Option S30)

MA20

MA20-S30*

MATERIALS
Maya is made of corrosion resistant 356 aluminum alloy with a copper (CU) content of less than 0.1%.
The MA20 features a high efficiency LED light engine, mounted on a thick base integral to the housing shell, designed with a heat sink pattern to optimize heat dissipation and luminaire efficacy. The power supply is enclosed in a thermally isolated chamber allowing a quick access for electrical maintenance without disturbing the optical light chamber, and providing long lifetime.

ELECTRICAL
POWER SUPPLY Standard driver is 0-10V dimming-ready (dims to 10%) with: 120-277 multi-volt compatibility (50-60Hz), operating temperature range of -40ºC to +55ºC / -40ºF to +131ºF, output over voltage protection, output over current protection and output short circuit protection with auto-recovery. Optional 347/480V available on selected models.

LED/Optics Type II, III, IV or V light distribution via high performance optical lenses. Offered in 2700K, 3000K, 3500K, 4000K. See the CCT options for details.
Optional true Amber LED for turtle sensitive areas.
Wavelengths: 584.5nm to 597nm.

LIFE
60,000hrs (L_{70}/B_{10}) based on LM-80 report for lumen maintenance.

FINISH
Five-stage preparation process includes preheating of cast aluminum parts for air extraction. Polyester powder coating is applied through an electrostatic process, and oven cured for long term finish.

MOUNTING
Maximum weight: 35 lbs (16 kg)
Maya is designed for ease of access and installation. Designed for wall or pole mount to fit with a 4" (102mm) or 5" (127mm) pole. 6" (152mm) available on request. Alternate poles or wall attachments are available to meet multiple installation conditions. (Refer to pages 4 and 5)

CERTIFICATION
Tested to UL1598 and CSA22.2 #250. ETL listed for wet location.
Photometric testing performed by an independent laboratory in accordance with IES LM-79-08 standards at 25ºC/77ºF. Lumen depreciation in accordance with IESNA LM80 standards.
Rated IP65.

MA20
Luminaire less shade
EPA: 0.93

MA20-S30
Luminaire with shade
EPA: 1.10

RSX2 LED
Area Luminaire

Buy American

Catalog Number
Notes
Type

Fit the list box to remove over the page to see all interactive elements.

Specifications

EPA (ft²@0°): 0.69 ft² (0.06 m²)
Length: 29.3" (74.4 cm) (SPA mount)
Width: 13.4" (34.0 cm)
Height: 3.0" (7.6 cm) Main Body, 7.2" (18.3 cm) Arm
Weight: (SPA mount) 30.0 lbs (13.6 kg)

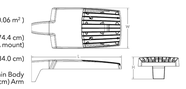

Introduction
The new RSX LED Area family delivers maximum value by providing significant energy savings, long life and outstanding photometric performance at an affordable price. The RSX2 delivers 11,000 to 31,000 lumens allowing it to replace 250W to 1000W HID luminaires.
The RSX features an integral universal mounting mechanism that allows the luminaire to be mounted on most existing drill hole patterns. This "no-drill" solution provides significant labor savings. An easy-access door on the bottom of mounting arm allows for wiring without opening the electrical compartment. A mast arm adaptor, adjustable integral slipfitter and other mounting configurations are available.

Ordering Information

EXAMPLE: RSX2 LED P6 40K R3 MVOLT SPA DDBXD

RSX2 LED

Series	Performance Package	Color Temperature	Distribution	Voltage	Mounting
RSX2 LED	P1 P2 P3 P4 P5 P6	30K 3000K 40K 4000K 50K 5000K	R2 Type 2 Wide R3 Type 3 Wide R3S Type 3 Short R4 Type 4 Wide R4S Type 4 Short R5 Type 5 Wide [1] R5S Type 5 Short [1] AFR Automotive Front Row AFRR90 Automotive Front Row Right Rotated AFRL90 Automotive Front Row Left Rotated	MVOLT (120V-277V) [1] HVOLT (347V-480V) [1] XVOLT (277V-480V) [1] **(use specific voltage for options as noted)** 120 [1] 277 [1] 208 [1] 347 [1] 240 [1] 480 [1]	SPA Square pole mounting (3.0" min. SQ pole for 1 at 90°, 3.5" min. SQ pole for 2, 3, 4 at 90°) RPA Round pole mounting (3.2" min. dia. RND pole for 2, 3, 4 at 90°, 3.0" min. dia. RND pole for 1 at 90°, 2 at 180°, 3 at 120°) MA Mast arm adaptor (fits 2-3/8" OD horizontal tenon) IS Adjustable slipfitter (fits 2-3/8" OD tenon) [4] WBA Wall bracket [1] WBASC Wall bracket with surface conduit box AASP Adjustable tilt arm square pole mounting [4] AARP Adjustable tilt arm round pole mounting [4] AAWB Adjustable tilt arm with wall bracket [4] AAWSC Adjustable tilt arm wall bracket and surface conduit box [4]

Options

Shipped Installed
HS House-side shield [7]
PE Photocontrol, button-style [8]
PER Photocontrol external threaded, adjustable [9]
PER7 Seven-wire twist-lock receptacle only (no control) [8,9,12,13]
CE34 Conduit entry 3/4"(NPT (Qty 2)
SF Single fuse (120, 277, 347) [1]
DF Double fuse (208, 240, 480) [1]
SPD20KV 20KV Surge pack (10KV standard)
FAO Field adjustable output [1,17]
DMG 0-10V dimming extend out back of housing for external control (control ordered separate) [17]
DS Dual switching [1,14]

Shipped Installed
***Standalone and Networked Sensors/Controls (factory default settings, see table page 9)**
NLTAIR2 nLight AIR generation 2 [11,15,16]
PIRHN Networked, Bi-Level motion/ambient sensor (for use with NLTAIR2) [11,16,17]
BAA Buy America(n) Act Compliant

***Note: PIRHN with nLight Air can be used as a standalone dimming sensor with-out-of-box settings or as a wireless networked solution. See factory default settings table. Sensor coverage pattern is affected when luminaire is tilted.**

Shipped Separately (requires some field assembly)
EGS External glare shield [7]
EGFV External glare full visor (360° around light aperture) [7]
BS Bird spikes [18]

Finish

DDBXD	Dark Bronze
DBLXD	Black
DNAXD	Natural Aluminum
DWHXD	White
DDBTXD	Textured Dark Bronze
DBLBXD	Textured Black
DNATXD	Textured Natural Aluminum
DWHGXD	Textured White

© 2011-2021 Acuity Brands Lighting, Inc. All rights reserved.

nexus SOLUTIONS®
MADISON, WI
MILWAUKEE, WI
MAPLE GROVE, MN

THIS DRAWING IS PROPERTY OF NEXUS SOLUTIONS, LLC. USE OR REPRODUCTION WITHOUT WRITTEN PERMISSION IS PROHIBITED.

JB Electrical Design, P.C.
Electrical Consulting Engineers
6885 Sycamore Ln N, Suite 210
Maple Grove, MN 55369
763.486.0965
jeff@jbelectricaldesign.com
JBED Proj. No. 2022-05

© 2021 by JB Electrical Design, PC

KEY PLAN

CENTRAL PUBLIC SCHOOLS
ATHLETIC FIELDS AND
SITE IMPROVEMENTS

531 MORSE ST. N.
NORWOOD YOUNG AMERICA, MN 55368

I HEREBY CERTIFY THAT THIS PLAN, SPECIFICATION, OR REPORT WAS PREPARED BY ME OR UNDER MY DIRECT SUPERVISION AND THAT I AM A DULY LICENSED PROFESSIONAL ENGINEER UNDER THE LAWS OF THE STATE OF MINNESOTA.

PRINTED NAME: Jeffery A. Blake
SIGNATURE:
DATE: -/-/2022 REG. NO. 41083

Date	Revision Description

PRELIMINARY DRAWINGS

DATE	x-xx-2022	PROJECT #	2022-05
DRAWN BY	RDO	CHECKED BY	JAB

DRAWING TITLE
LIGHT FIXTURE SPECS

DRAWING NUMBER
E142

© Nexus Solutions, LLC

What did they like best?	Good things from Jordan?	Good things from EP?	Good things from St. Peter?		
Having a state of the art weight room.	Common space to work in groups	Media connected to lunchroom	Weight Room		
The overall layout of Jordan MS	The big open lunchroom/grade pods	Natural light	Weight Room, open rooms to the common spaces		Common Space/Large Group/Small Group Area
Jordan's open floor plan	Open classrooms to the common spaces	Portal doors	The gym		Specialty Areas
The chance to see different schools	Commons, combined with a small group area	Garage doors/portal doors	The gym		Natural light
The overall open floor plans of each site	Classrooms combined with the open areas	Natural light	Weight room		Weight Room/Gym
Windows. The size of windows	Open concepts with lots of glass	Natural light	The gym and weight room		Flexible Furniture
Study areas in the hallways/nooks	Glass, glass, glass	Theater seating	Cafe', the variety of benches/seating		
EP's theater	All the color. Glass, TVs, your own space yet being close to everyone	Theater!!!!	Thier schedule (4 period day).		
Jordan's floor plan. Open cafe' and the common space in the pods.	Furniture	Band/Choir/Theater area	Natural light		
Jordan's open floor plan	Glass, pods, openness	Band area	Greenhouse and weightroom		
Diversity of people I saw	Lighting	Orchestra pit	Weight room, more private than Jordan		
Art wings, they seemed professional	The professional finished feel of the school	The open spaces	Arts wing		
Pods to study in open spaces	Common spaces in each pod	Natural light	Weight room		
Natural light, lots of windows	The furniture	Windows	The overall openness of the the school		
Flexible seating at each school	Flexible seating	Open floor plan in the new area	Gym, greenhouse		
Pods...an open area to be	The open space	The dark color scheme	Science labs		
Jordan's seating options, open hallways	The open hallways to work in	The realxing feel in the MS	The pods, space outside the 6 classrooms		
Jordan's open space in the MS	The pods and little rooms for working on things	The hallway with no doors	Ag-Welding-Woods area		
St. Peter had a combo of opena and closed spaces. Good specialty centers (arts, ag, weight room, wrestling). Sleek design but not flavorless.	Open learning areas	Natural light	Wrestling and weight rooms		
The pods that had a combo of lockers, windows and seating	The pods and rooms to go and work	The lunch room and little pods	Locker seating ares, weight room, gym		
Updated bathrooms, weight room, windows, open floor plans	The open areas	Lunch room	Windows, size, diversity		
Weight room	Differen tpods and "fish bowl" areas	Band room area	Literally everything, great school		
The greenhouse, and larger rooms at SP	The chairs with wheels and the open light	The furniture	White board walls		
The gym at SP	TVs in the little nooks	The theater	The gym		
3D printers	Open areas and carpet (quiet)	How close the classes were	Windows		
Currently use locker	14/25				
Dedicated MS locker?	11/25				
Dedicated HS locker?	6/25				

Adopted: December 14, 1995
Revised: February 2022

102 EQUAL EDUCATIONAL OPPORTUNITY

I. PURPOSE

The purpose of this policy is to ensure that equal educational opportunity is provided for all students of the school district.

II. GENERAL STATEMENT OF POLICY

A. The policy of the school district is to provide equal educational opportunity for all students. The school district does not unlawfully discriminate on the basis of race, color, creed, religion, national origin, sex, marital status, parental status, status with regard to public assistance, disability, sexual orientation, including gender identity and expression, or age. The school district also makes reasonable accommodations for disabled students.

B. The school district prohibits the harassment of any individual for any of the categories listed above. For information about the types of conduct that constitute violation of the school district's policy on harassment and violence and the school district's procedures for addressing such complaints, refer to the school district's policy on harassment and violence.

C. This policy applies to all areas of education including academics, coursework, co-curricular and extracurricular activities, or other rights or privileges of enrollment.

D. Every school district employee shall be responsible for complying with this policy conscientiously.

E. Any student, parent, or guardian having a question regarding this policy should discuss it with the appropriate school district official as provided by policy. In the absence of a specific designee, an inquiry or a complaint should be referred to the superintendent.

Legal References: Minn. Stat. § 121A.03, Subd. 2 (Sexual, Religious, and Racial Harassment and Violence Policy)
Minn. Stat. Ch. 363A (Minnesota Human Rights Act)
20 U.S.C. § 1681 *et seq.* (Title IX of the Education Amendments of 1972)
42 U.S.C. § 12101 *et seq.* (Americans with Disabilities Act)

Cross References: MSBA/MASA Model Policy 402 (Disability Nondiscrimination)

MSBA/MASA Model Policy 413 (Harassment and Violence)
MSBA/MASA Model Policy 521 (Student Disability Nondiscrimination)
MSBA/MASA Model Policy 522 (Student Sex Nondiscrimination)

CENRAL PUBLIC SCHOOL ISD NO. 108

ATHLETIC FIELD TURF PROJECT

TUESDAY, FEBRUARY 23, 2022 AT 2:00PM

Contractor	Addenda 1	Bid Bond	Responsible Contractor	Single Contract Base Bid	Alt. #1 -Maroon Number Shadowing	Alt. #2 End Zone Logos
Shaw Industries Group Inc.		X	X	$ 420,479.00	$ 3,299.00	$ 5,896.00
SprinTurf		X	X	$ 438,700.00	$ 3,100.00	$ 11,900.00
Low Totals						

Date: **February 23, 2022**

To: **Central ISD 108**

From: **Brian Lonquist**
Nexus Solutions

Subject: **Central Schools – Bid Package No. 1 – Athletic Field Turf**
Recommendation to Award and Reject Bids

Dear Board Members,

Bids for the Central Schools Bid Package No.1 – Central Schools Athletic Field Turf Project were received and publicly opened at 2:00 PM on Wednesday, February 23, 2022 at the District Office.

Nexus Solutions recommends to ISD 108 that the motion be approved for the following bids to be ***awarded:***

Furnish and Install Athletic Field Turf

- **Shaw Industries Group, Inc.** in the amount of **$420,479**

Alternate No. 1 – Maroon Number Shadowing

- **Shaw Industries Group, Inc.** in the amount of **$3,299**

Nexus Solutions recommends to ISD 108 that the motion be approved for the following bids to be ***rejected***:

Alternate No. 2 – Maroon Number Shadowing

- **Shaw Industries Group, Inc.** in the amount of **$5,896**

In summary, Nexus recommends the Board ***award*** the recommended bids totaling: **$423,778**

Please contact me at either blonquist@nexussolutions.com or 612-916-0939 with any questions.

Thank you,

Brian Lonquist, Project Manager
Nexus Solutions

Attachments: BP01 Athletic Field Turf Bid Tabulation
CC: Central ISD 108
Nexus Solutions