Edinburg Consolidated Independent School District

Regular

Tuesday, September 14, 2010 6:00 PM

Agenda of Regular Meeting

The Board of Trustees
Edinburg Consolidated Independent School District

A Regular Meeting of the Board of Trustees of Edinburg Consolidated Independent School District will be held September 14, 2010, beginning at 6:00 PM in the Board Room, 411 North 8th Street; Edinburg, Texas 78541.

It is the policy of Edinburg CISD not to discriminate in its educational programs based on sex, age, religion, race, color, national origin, or handicap. *Es la poliza del distrito escolar de Edinburg de no discriminar en sus programas educativos por razon de sexo, edad, religion, raza, color, origen nacional o por incapacidad.*

The subjects to be discussed or considered or upon which any formal action may be taken are as listed below. Items do not have to be taken in the order shown on this meeting notice.

Unless removed from the consent agenda, items identified within the consent agenda will be acted on at one time.

1. CALL MEETING TO ORDER, CONDUCT ROLL CALL, ESTABLISH QUORUM
   Presenter: President Omar Palacios
   Time: 6:00 PM
2. PRAYER, PLEDGE OF ALLEGIANCE, AND TEXAS PLEDGE
   Presenter: Mr. Robert Pena Jr
3. CERTIFICATION OF PUBLIC NOTICE
   Notice was posted in the Edinburg CISD Administration Building at 411 North 8th Street in Edinburg, Texas on September 10, 2010 at 6:00 p.m. signed Dr. René Gutiérrez, Superintendent of Schools.
   Presenter: President Palacios
4. AWARDS & RECOGNITION
   Presenter: Superintendent Rene Gutierrez
   A. For Service to Country Soldiers Returning from Iraq: Jaime Gutierrez, Jose del Refugio Reyes, and Alfredo Soto III
   B. Marco Acevedo of Edinburg High School Selected and Participated in High School Summer College Program at Stanford University
   C. Jacqueline Acevedo of Edinburg High School Selected and Participated in NASA High School Aerospace Scholars Program
   D. Sofia Velasquez, Former Student of Economedes High School Selected to Be

Honored at the State Migrant Annual Conference

E. Creative Education Institute Exemplary Awards to Avila, De la Vina, J.F. Kennedy, Lincoln, and Truman Elementary--1st Year Recipients; Betts, Cano/Gonzalez, Cavazos, De Escandon, Guerra, F. Gonzalez, Jefferson, Magee, Monte Cristo, Trevino Elementary, Barrientes Middle, and Economedes High--2-3 Year Recipients; Austin, Esparza Elementary, and B L Garza Middle--4-5 Year Recipients; and De Zavala Elementary--11 Year Recipient

5. PUBLIC COMMENTS
Public participation is limited to the designated open forum portion of the meeting. At all times during board meetings, the audience shall not enter into discussion or debate on matters being considered by the Board, unless recognized by the Board President. No presentation shall exceed five minutes.
Presenter: Superintendent Gutierrez

6. SUPERINTENDENT'S REPORT
Presenter: Superintendent Gutierrez

A. Delinquent Tax Collections for Period of September 1, 2009 through August 31, 2010 by Linebarger Goggan Blair & Sampson

B. Update on 2008 Bond Construction Projects by Broaddus & Associates

C. Presentation of Jumbotron Video for CATS Stadium

D. Enrollment at Vision Academy

E. Enrollment as of September 10, 2010

F. Teacher Vacancies

7. CONSENT AGENDA
The following item(s) are of a routine or administrative nature. All items are to be acted on by one vote without being discussed separately, unless requested by a board member in which case the item(s) will be considered individually after the items not requiring discussion have been acted on.
Presenter: President Palacios

A. (009A- 1) Minutes for Public Hearing and Regular Board Meeting of August 24, 2010 — 7

B. (009A- 2) BID 09-06 Air Conditioner and Refrigerator Supplies, Second and Final Renewal COST $90,000.00 SOURCE Local and Child Nutrition Funds — 15

C. (009A- 3) BID 09-149 Laminating Film and Transparencies, First and Final Renewal COST $24,000.00 SOURCE All Funds — 20

D. (009A- 4) BID 09-152 Awards and Incentives, First and Final Renewal COST $178,000.00 SOURCE All Funds — 30

E. (009A- 5) BID 09-171 Cross Country Supplies, First and Final Contract Renewal COST $41,400.00 SOURCE Athletic Funds — 52

F. (009A- 6) BID 09-172 Tennis Supplies, First and Final Renewal COST — 69

$26,000.00 SOURCE Athletic Funds

G. (009A- 7) BID 09-179 Glass Products and Related Items, First and Final Renewal COST $25,000.00 SOURCE Local Funds 85

H. (009A- 8) BID 10-05 Golf Supplies, First and Final Renewal COST $20,000.00 SOURCE Athletic Funds 97

I. (009A- 9) BID 10-08 Volleyball Supplies, First and Final Renewal COST $33,000.00 SOURCE Athletic Funds 109

J. (009A-10) BID 10-178 Instructional Materials COST $2,900,000.00 SOURCE All Funds 130

K. (009A-11) BID 10-183 Floor Care Equipment Repairs COST $14,000.00 SOURCE Local Funds 188

L. (009A-12) BID 11-08 Buses for Transportation Department COST $916,478.00 SOURCE Local Funds 193

M. (009A-13) BUYBOARD 11-12 Band Uniforms and Formal Wear for Economedes High School COST $84,986.75 SOURCE Fine Arts Funds 223

N. (009A-14) RFP 09-136 Web-Based Instruction Program for Texas Essential and Knowledge Skills, First and Final Renewal COST $70,000.00 SOURCE All Funds 227

O. (009A-15) RFP 10-196 District Wide Consultant Strategist for Federal Programs COST $163,250.00 SOURCE State and Federal Funds 231

P. (009A-16) RFP 10-198 Fine Arts Band Consultants COST $42,000.00 SOURCE Fine Arts Funds 236

Q. (009A-17) RFP 10-201 Travel Agency Services COST $113,000.00 SOURCE All Funds 249

R. (009A-18) AV Multimedia Software from Awarded Vendors through the Region One Library Purchasing Cooperative for Fiscal School Year 2010-2011 by Library Services Department for Three High Schools, Five Middle Schools, and Thirty Elementary Schools 253

S. (009A-19) 2010-2011 Renewal of Destiny Resource Management Solution--Destiny Library Manager Annual Software License Including the State Standards and TitlePeek Subscription Services for the Three High Schools, Five Middle Schools, and Thirty Elementary Schools COST $53,200.00 SOURCE Local Funds 261

8. ACTION AGENDA
Presenter: President Palacios

A. (009A-20) Contract with Dr. Diana Ramirez of D.M.R. Educational Consulting to Provide Training for New Elementary through High School Teachers for the 2010-2011 School Year COST $95,200.00 SOURCE Local and Federal Funds 267

B. (009A-21) Resolution 2011-01 Adopting the 2010 Tax Rate 271

C. (009A-22) RFQ 08-35 Financial Advisor Services, Third and Final Contract 274

Renewal COST $32,000.00 SOURCE Debt Service Funds

D. (009A-23) Lease Service Contract Between Hidalgo County Elections Administrator on Behalf of Hidalgo County and Edinburg Consolidated Independent School District COST $15,434.00 SOURCE Local Funds 282

E. (009A-24) Edinburg CISD Campus Crime Stoppers COST $1,800.00 SOURCE Individual/Corporate Donations 289

F. (009A-25) 2010-2011 Salary Schedule for Classroom Teachers, Librarians, and Nurses Including Placement on Current Step 23+ on Classroom Teacher Scale COST $54,000.00 SOURCE Local, State, and Federal Funds 296

G. (009A-26) Maintenance Contract with Systems Design Purchased from DIR Contract DIR-SDD-981 for 2010-2011 School Year COST $19,621.09 SOURCE Child Nutrition Funds 299

H. (009A-27) Change Directive 7 for Brewster School Phase I Cafeteria and Site Improvements 301

I. (009A-28) Change Order 1 for Group C Fine Arts Facilities REDUCTION $53,630.00 SOURCE Construction 2008 Bond Funds 305

J. (009A-29) Repayment Resolution 2011-02 in the Amount of $446,173.00 from General Fund for Purchase of the Jumbotron at CATS Stadium $446,173.00 SOURCE General Funds 314

K. (009A-30) Voyager Expanded Learning Intervention Materials for Struggling 6th through 8th Grade Reading and Math Students, and Consultant Services for Middle School Teachers for 2010-2011 School Year COST $319,241.10 SOURCE Federal Funds 330

L. (009A-31) Employment, Resignations, and Retirements

9. CLOSED SESSION

Discussion under the authority of Section 551, Texas Government Code: If, during the course of the meeting covered by this Notice, the Board should determine that a Closed Session of the Board should be held or is required in relation to any item included in this Notice, then such closed session as authorized by Section 551.001 et. seq. of the Texas Government Code (the Open Meetings Act) will be held by the Board after the commencement in Open Session of the meeting covered by this Notice. Such closed session may concern any or all of the subjects and be conducted for any and all purposes permitted by Section 551.071 through and including Section 551.084 of the Texas Open Meetings Act, including, but not limited to, private consultation with the Board's attorney on any or all subjects or matters authorized by law.

Presenter: President Palacios

A. Section 551.071--Consultation with Attorney on Any Permitted Subject Including, But Not Limited to:

1. Discussion with School Attorney of Item(s) Exempted under Attorney-Client Privilege

2. Update on Pending Litigation
3. Discussion on Possible Settlement Agreement Regarding Supplemental Education Service Providers
4. Discussion Regarding Settlement Agreement in T.P. bnf A.P. vs. ECISD
5. Discussion with Attorney Regarding Legal Issues on Class Size Waivers
6. Discussion Regarding Legal Issues Concerning November Election for School Board of Trustees

B. Section 551.072--Deliberation Regarding Real Property
1. Discussion on Acquisition of Possible Land Donation for Future Development
2. Discussion on Proposed Contracts for Land Purchases

C. Section 551.074--Personnel Matters
1. Discussion on Employment of
a. Director of Special Education
b. Educational Diagnostician
c. Counselor, De Zavala Elementary
2. Discussion of Employment, Resignations, and Retirements
3. Update of Pending Personnel Investigations

D. Section 551.071--Consultation with Attorney & Section 551.074--Personnel Matters

E. Section 551.082--Discipline of a Public School Child

10. ACTION ON ITEMS DISCUSSED IN CLOSED SESSION
Presenter: President Palacios

A. Section 551.071--Consultation with Attorney
1. Consideration of and Possible Action on Possible Settlement Agreement Regarding Supplemental Education Service Providers
2. Consideration of and Possible Action Regarding Possible Settlement Agreement in T.P. bnf A. P. vs. ECISD

B. Section 551.072--Delibration Regarding Real Property

C. Section 551.074--Personnel Matters

11. ADJOURNMENT
Presenter: President Palacios

APPROVAL OF BOARD MINUTES

Superintendent's Recommendation

Board of Trustees approval of the minutes for the following board meeting(s):

Public Hearing on August 24, 2010
Regular Board Meeting on August 24, 2010

Rationale

Article 6252-17A, §3b, V.A.T.S. requires in part that the Board shall prepare and retain minutes of each of its open meetings. The minutes are public record and shall be available for public inspection and copying upon request to the Superintendent or his designee.

Paperwork Impact

No additional paperwork will be generated.

Budgetary Information

The budget will not be impacted.

Resource Personnel

Dr. René Gutiérrez

Board Policy Reference and Compliance

This item is in compliance and in accordance with Board Policy BE and BE (Local).

Prepared by Mary Alice Martin
Mary Alice S. Martin, Board Secretary

Recommended by René Gutiérrez
Dr. René Gutiérrez, Superintendent of Schools

EXHIBIT A, PAGES 1-7

EDINBURG CONSOLIDATED INDEPENDENT SCHOOL DISTRICT
Edinburg, Texas

STATE OF TEXAS §

COUNTY OF HIDALGO § **August 24, 2010**

On the **24th day of August 2010**, the **Board of Trustees** for the Edinburg Consolidated Independent School District met for a **public hearing (2010-2011 budget and tax rate)** with the following members present:

Omar Palacios, President
Ciro Treviño, Secretary
Jaime R. Chavana, Member
Carmen González, Member
David Torres, Vice-President

Absent from the meeting were Vice President Robert Peña Jr. and Member Gregory "Greg" García.

NOTE: If more detailed information regarding the presentations and discussion is desired, the audio and video taped recordings are available through the superintendent's office.

President Palacios, who established **quorum**, called the meeting to order at 5:30 p.m. He then asked for certification that **Public Notice** had been posted in the Edinburg CISD Administration Building at 411 North 8th Street in Edinburg on August 19, 2010 at 6:00 p.m. signed René Gutiérrez, Superintendent of Schools.

Agenda Item III Discussion on Proposed Budget and Tax Rate for the 2010-2011 School Year, along with advertising the proposed tax rate, Assistant Superintendent Rigoberto Abrego stated that the public hearing is being conducted to be in compliance with state mandates.

Mr. Abrego added that the proposed tax of $1.2398 includes the Maintenance and Operation tax of $1.04 and Interest and Sinking Fund of $.1998. This year the only tax increase is the $.02 needed to cover 2008 bond payments. The $0.02 increase is part of the total $.0776 (voter approved in the 2008 bond election). Last year's tax increase was $0.04 with a $0.02 increase projected that will complete the tax increases needed for the 2008 bond.

At 5:32 p.m., President Palacios opened the floor for **Agenda Item IV Public Comments Regarding Proposed Budget and Tax Rate for the 2010-2011 School Year.** Instead of hitting the taxpayer with another tax increase, "Tighten your belts" was **Fern McClaugherty's** request. Superintendent Gutierrez commented that this year's $.02 increase ($1.2198 to $1.2398) is needed to phase in the $.0776 overall tax increase to cover the 2008 bond payment approved by the voters.

Mrs. Carmen González moved and Mr. Ciro Treviño seconded the motion to **adjourn.** The motion carried. President Palacios adjourned the meeting at 5:35 p.m.

OMAR PALACIOS
President of the Board of Trustees

ATTESTED BY

CIRO TREVINO
Secretary to the Board of Trustees

EXHIBIT A

EDINBURG CONSOLIDATED INDEPENDENT SCHOOL DISTRICT
Edinburg, Texas

STATE OF TEXAS §

COUNTY OF HIDALGO § **August 24, 2010**

On the **24th day of August 2010**, the Board of Trustees for the Edinburg Consolidated Independent School District met in **regular session** with the following members present:

Omar Palacios, President	Jaime R. Chavana, Member
Robert Peña Jr., Vice President	Gregory "Greg" García, Member (arrived @ 6:31 p.m.)
Ciro Treviño, Secretary	Carmen González, Member
	David Torres, Member

Present at the request of the superintendent was Jacques E. Treviño, board attorney.

NOTE: If more detailed information regarding presentations, discussion, and action taken during the meeting is desired, the audio and video-taped recordings are available through the superintendent's office.

President Palacios, who established **quorum**, called the meeting to order at 6:03 p.m.
Mrs. Carmen González offered the **prayer and led the Pledge of Allegiance and Texas Pledge**.

President Palacios asked for certification that **Public Notice** had been posted in the Edinburg CISD Administration Building at 411 North 8th Street in Edinburg, Texas on August 19, 2010 at 6:00 p.m. signed Dr. René Gutiérrez, Superintendent of Schools.

Under **Awards & Recognition**: None

Under **Public Comments**, "Education Jobs Funds" was **Luis Tovar's** topic encouraged the community to submit letters (found on AFT website) to Governor Perry supporting the acceptance of millions in federal funds for districts to use in sustaining employment. **Fern McClaugherty's** "Taxpayers Money" asked that ECISD tighten its belt by doing away with meals provided at meetings, doing away with retired/ rehired teachers/administrators, and why now (referring to Agenda Item 008B-22 salary/pay grade upgrades). **Joe Ponce's** "Concerns" included open records request that he has not yet received a response, children not being picked up/dropped off on time at school/home, not the best time for salary increases, and screen vendors more carefully—parents having difficulty getting uniforms that they have already paid for, and he cautioned candidates to file financial reports.

Under **Superintendent's Report**:

A. 2010 Texas Assessment of Knowledge and Skills (TAKS) and Adequate Yearly Progress (AYP) Results
B. Teacher Vacancies 7 (1 elementary/6 secondary)

CONSENT AGENDA ITEMS

Mrs. Carmen González moved and Mr. Ciro Treviño seconded the motion to **Approve Agenda Items: *008B-1* Minutes for Regular Board Meeting of August 10, 2010; *008B-2* Bid 09-142 Maps and Globes, First and Final Contract Renewal with Several Vendors for a Total of $17,000.00; *008B-3* Bid 09-160 Library Supplies, First and Final Contract Renewal to**

EXHIBIT A-2

Several Vendors with Highsmith and Brodart Company as Primary Vendors for a Total of $95,000.00; *008B-4* Bid 10-07 Trophies, Plaques, Ribbons and Medals, First and Final Contract Renewal to Several Vendors with K C Advertising Specialties Inc. as Primary Vendor for a Total of $60,000.00; *008B-5* Bid 10-156 Moving Portable Buildings to Iglesias Bros House Movers in the Amount of $60,000.00; *008B-6* Bid 10-158 Charter Bus Services to Valley Transit Company Inc, Escamilla Tour Buses LLC, Nicolas Escamilla dba Discovery, OK Tours LLC, G-Tours, and Cougar Bus Lines Ltd. for a Total of $94,300.00; *008B-7* Bid 10-169 Service Awards and Plaques District Wide to Valley Trophies and Expressions in Glass for a Total of $12,983.45; *008B-8* Bid 10-182 Edinburg High School Repair Underground Intercom Wire, Rewire Intercom and Clocks, and Add Outside Horns to All American Security in the Amount of $42,737.00; *008B-9* Bid 10-190 Diesel and Unleaded Fuel to Gold Star Petroleum Inc. in the Amount of $1,300,000.00; *008B-10* Fee Schedule for RFQ 10-113 Asbestos Consultant Services for Maintenance & Facilities to Terracon Consultants Inc. in the Amount of $55,000.00; *008B-11* Liberty Source LP for TPRI/*Tejas Lee* Assessment Services in the Amount of $83,358.13; and *008B-12* Service Agreement for 35 Campuses with Creative Education Institute in the Amount of $122,500.00, as recommended by Superintendent René Gutiérrez. The motion carried.

ACTION AGENDA ITEMS

Mrs. Carmen González moved and Mr. David Torres and Mr. Robert Peña Jr. seconded the motion to **Approve Agenda Item 008B-13 Resolution 2010-10 Stating Annual Review of District Investment Policy and Strategies,** as recommended by Superintendent René Gutiérrez. The motion carried.

Mr. Jaime R. Chavana moved and Mr. Ciro Treviño seconded the motion to **Approve Agenda Item 008B-14 Annual Review and Adoption for List of Qualified Broker/Dealer Investment Firms for District Investments of Lone Star Investment Pool, UBS Paine Webber Inc., Prudential Securities, First National Bank Edinburg, First Empire Securities Inc., Vinning-Sparks IBG, RBC Dain Rauscher, Merrill Lynch, Morgan Keegan & Company Inc., Federated Investors, MBIA Municipal Investors Service Corporation, and TexasTERM Investment Pool,** as recommended by Superintendent René Gutiérrez. The motion carried.

Mr. Gregory "Greg" García moved and Mrs. Carmen González seconded the motion to **Approve Agenda Item 008B-15 Resolution 2010-11 Approving Independent Sources Instruction Relating to Investment Responsibilities by Attending Investment Training Session Not Less than Once in a Two-Year Period and Receive Not Less than Ten Hours of Instruction Relating to Investment Responsibilities from Independent Sources Approved by Board of Trustees which are Texas Association of School Boards, Texas Association of School Business Officials (TASBO), Region One ESC Affiliate Organizations of TASBO, and Texas Society of CPA's in the Amount of $5,500.00,** as recommended by Superintendent René Gutiérrez. The motion carried.

Mrs. Carmen González moved and Mr. Ciro Treviño seconded the motion to **Approve Agenda Item 008B-16 2009-2010 Final Amended Composite Budget for General and Debt Service Funds,** as recommended by Superintendent René Gutiérrez. The motion passed 6 to 1 with Robert Peña Jr. voting against.

Mr. Ciro Treviño moved and Mrs. Carmen González seconded the motion to **Approve Agenda Item 008B-17 2010-2011 Proposed Composite Budget for General and Debt Service Funds,** as recommended by Superintendent René Gutiérrez. The motion passed 6 to 1 with Robert Peña Jr. voting against.

EXHIBIT A-3

Mr. Gregory "Greg" García moved and Mrs. Carmen González seconded the motion to **Approve Agenda Item 008B-18 2010-2011 Commitment for Participation in Personnel Services Cooperative with Region One ESC in the Amount of $5,865.00,** as recommended by Superintendent René Gutiérrez. The motion carried.

Mr. Jaime R. Chavana moved and Mr. Ciro Treviño seconded the motion to **Approve Agenda Item 008B-19 School Calendar Amendment for 2010-2011 School Year by Changing the May 16, 2011 (state mandated testing date) Holiday to May 6, 2011,** as recommended by Superintendent René Gutiérrez. The motion carried.

Mr. Gregory "Greg" García moved and Mr. David Torres seconded the motion to **Approve Agenda Item 008B-20 ECISD 2010-2011 "Professional Development Appraisal System" Calendar,** as recommended by Superintendent René Gutiérrez. The motion carried.

Mr. Gregory "Greg" García moved and Mr. Jaime R. Chavana seconded the motion to **Approve Agenda Item 008B-21 ECISD 2010-2011 "Professional Development Appraisal System" Appraisers,** as recommended by Superintendent René Gutiérrez. The motion carried.

Mr. Gregory "Greg" García moved and Mrs. Carmen González seconded the motion to **Approve Agenda Item 008B-22 Job Classifications, Additional Duties, and Upgrade in Salary Schedule with Corresponding Salary Adjustments for ECISD Coordinator of Maintenance & Facilities, Coordinator of Career &Technical Education, and Director of Bilingual Education,** as recommended by Superintendent René Gutiérrez. The motion passed 6 to 1 with Robert Peña Jr. voting against.

Mr. Gregory "Greg" García moved and Mr. Jaime R. Chavana seconded the motion to **Approve Agenda Item 008B-23 Memorandum of Understanding Regarding the Hidalgo County Juvenile Justice Alternative Education Program in the Amount of $42,000.00,** as recommended by Superintendent René Gutiérrez. The motion carried.

Mr. Gregory "Greg" García moved and Mr. David Torres seconded the motion to **Approve Agenda Item 008B-24 2010-2011 Elementary and Secondary Student Code of Conduct and Student/Parent Handbooks,** as recommended by Superintendent René Gutiérrez. The motion carried.

Mr. Gregory "Greg" García moved and Mr. Ciro Treviño seconded the motion to **Approve Agenda Item 008B-25 2010-2011 Interlocal Cooperation Contract with University of Texas Pan American for Gear Up Fund 274 in the Amount of $268,250.00,** as recommended by Superintendent René Gutiérrez. The motion carried.

Mr. Ciro Treviño moved and Mr. Gregory "Greg" García seconded the motion to enter **Closed Session.** The motion carried.

President Palacios recessed the meeting at 6:38 p.m. enabling the Board to enter Closed Session.

Mr. Robert Peña Jr. moved and Mr. Jaime R. Chavana seconded the motion to return to **Open Session.** The motion carried.

After returning to Open Session at 8:10 p.m., President Palacios announced that no action had been taken on items discussed in Closed Session.

Superintendent Gutiérrez announced that administration did not have a recommendation for **Section 551.074 C.1a Employment of Director for Special Education.**

EXHIBIT A-4

Mrs. Carmen González moved and Mr. David Torres seconded the motion to **Approve Section 551.074 C.1b Employment of Angelica Peralta as Speech Language Pathologist in Special Education,** as recommended by Superintendent René Gutiérrez. The motion carried.

Mr. Jaime R. Chavana moved and Mrs. Carmen González seconded the motion to **Approve Section 551.074 C.2 (Agenda Item 008B-26) Employment, Resignations, and Retirements as Discussed in Closed Session,** as recommended by Superintendent René Gutiérrez. The motion carried.

Employment for 2010-2011

Ana Alfaro*	BS/Texas A & M Kngsv	14- 7 years experience
Jesus Carlos Balderas*	MS/Texas A & M Kngsv	0- 0 years experience
Miguel Condes*	BA/UT, Pan American	0- 0 years experience
Brian Gabrysh*	MS/Texas A & M Kngsv	1- 0 years experience
Maria Lilia Garcia*	BS/UT, Pan American	0- 0 years experience
Stephanie Ann Garza*	BBA/UT, Pan American	2- 0 years experience
Mayra G. Jimenez*	BS/UT, Pan American	0- 0 years experience
Susana I. Massa*	BS/UT, Pan American	6- 0 years experience
Oscar Mendoza*	BA/UT, Pan American	0- 0 years experience
Rebecca Monroe*/**	BA/Southwestern Univ.	6- 0 years experience
Abraham Rodriguez*	BA/UT, Pan American	0- 0 years experience
Dina Romero*	BA/UT, Pan American	2- 0 years experience
Vanessa Sanchez*	BS/UT, Pan American	0- 0 years experience
Arnoldo Solis Jr*	N/A (JROTC)	0- 0 years experience
Miguel A. Soto*	BS/UT, Pan American	1- 1 years experience
Leticia Duarte*	MED/California St. Univ.	17-12 years experience
Margeaux L. McCarthy*	BS/Austin	2- 1 years experience
Adrian M. Ramirez*	BA/UT, Austin	0- 0 years experience
Cynthia Edith Razo*	BA/UT, Pan American	0- 0 years experience
Jacob Trevino*	BA/UT, Pan American	0- 0 years experience

*Pending criminal background check **Moving to Edinburg

Resignations and Retirements

Carlos Cantu	5th Grade/Villarreal
Peggy Polinard (Retiring)	1st Grade Bilingual/Hargill

Employment of Paraprofessionals (University Hours) and Classified Employees

Marissa Bocanegra	High School Diploma	9- 9 years experience
Amanda Borrego	UT/Pan American	0- 0 years experience
Maribel Garcia	Spantran Srvc (BS)	5- 0 years experience
Jesus Garza	UT/Pan American (53)	0- 0 years experience
Daniel M. Mejia	UT/Pan American/STC (48)	0- 0 years experience
Zeneth Ramirez	UT/Pan American (65)	0- 0 years experience
Felipe Pena	CN Custodian	0- 0 years experience
Joe G. Perez	Food Prep/JFK	6- 6 years experience
Maria J. Ramirez	Food Prep/South MS	Pending
Camelia Ayala	Food Prep/Cavazos	1- 1 years experience
Rosa Rodriguez	Food Prep/Harwell MS	0- 0 years experience
Laura Hinojosa	Food Prep/Guerra	0- 0 years experience

EXHIBIT A-5

Promotions

Leticia Gonzalez	Special Ed Aide/Esparza
Melissa Ramos	Bookkeeper/Garza MS
Marin Chapa	Athletic Fields Marker/Stadium
Martha Garza	Lead Custodian/Cano/Gonzalez
Velma Rendon	Cafeteria Manager/Monte Cristo

Resignations and Retirements

Lindbherg Ake	Special Ed Aide/South MS
Raquel Campos	Migrant Clerk/Magee
Kelly C. Dillard	Aide/Trevino
Jeremy Garate	Special Ed Aide/Cavazos
Irasema Ibarra	Financial Aide Officer Clerk/Edinburg North HS
Mayra Jimenez	Aide/JFK
Miguel Ramirez	Special Ed Aide/Edinburg North HS
Belinda Rubio	Aide/Esparza
Rosa I. Garcia	Food Prep/Edinburg North HS
Jose L. Rangel	Bus Driver/Transportation

Military Leave Reinstatement

Jose de Refugio Reyes Jr	Police Officer, Campus Liaison/Economedes HS

Employment of Interns/Tutors/Student Workers

Fidel Covarrubias	Tutor/South MS
Andrea Villarreal	Tutor/South MS
Darla Ortega	Tutor/South MS
Daniel Maani	Tutor/South MS
Janae Herrera	Tutor/South MS
Edwardo Garza	Tutor/South MS
Kristina Carrizales	Tech Intern/Austin.Lincoln
Jessica N. Luna	Tech Intern/Magee
Aidil Llanes	Tech Intern/Trevino
Melissa Garcia	Tech Intern/Eisenhower
Yanelly Cantu	Tech Intern/JFK.San Carlos
Ernesto Rodriguez Jr	Tech Intern/Travis.Jefferson
Dennis A. Santos	Tech Intern/Ramirez
Robert Ocana	Tech Intern/Economedes HS
Marla Ramirez	Tech Intern/De Escandon
Jose M. Flores	Tech Intern/Economedes HS
Stephanie Salinas	Tech Intern/Betts.Esparza

Resignations

Lina Novoa	Tutor/Edinburg HS
Enrique Rodriguez	Tech Intern/Technology
Michael Villarreal	Tech Intern/Economedes HS
Glory Trevino	AVID Tutor/Edinburg HS

EXHIBIT A-6

Employment of Special Education Shadows

Sara Lopez	Truman
Rosa Chavez	Memorial MS

Mrs. Carmen González moved and Mr. David Torres seconded the motion to **adjourn.** The motion carried.

President Palacios adjourned the meeting at 8:11 p.m.

OMAR PALACIOS
President of the Board of Trustees

ATTESTED BY

CIRO TREVINO
Secretary to the Board of Trustees

EXHIBIT A-7

APPROVAL OF BID 09-06, AIR CONDITIONER AND REFRIGERATOR SUPPLIES – SECOND AND FINAL RENEWAL

Superintendent's Recommendation

That the Board of Trustees approve the recommendation to renew the Air Conditioner and Refrigerator Supplies Bid, which is indicated in the attached renewal forms as being the most favorable and advantageous to the Edinburg CISD.

Rationale

This will be the final contract renewal. Mr. Robert Saenz, Director of Maintenance & Facilities, Mrs. Mary De Luna, Director of Child Nutrition, and the awarded vendor have agreed in writing to continue this bid for an additional year at no increase in cost.

Administration sought competitive sealed bids for Air Conditioner and Refrigerator Supplies. Bid opening was held at the Business Office Building on August 26, 2008, at 2:30 P.M., where three (3) proposals were received, opened, and read aloud. This bid is to purchase miscellaneous air conditioner supplies for district wide repairs. Local vendor stocks inventory of critical parts which allow us to repair failures in a timely manner. Common parts include but not limited to motors, compressors, belts, diffusers, and thermostats.

User Department

This item was requested by Mr. Robert Saenz, Director of Maintenance & Facilities Department and Mrs. Mary De Luna, Director of Child Nutrition Department.

Budgetary Information

Award Recommendation **$90,000.00**

Account	Discription	Appropriation	Encumbrance	Expenditure	Balance
199-51-6319-01-936-199-000	Maint/Operation	232,163.00	0.00	0.00	232,163.00
101-35-6319-60-938-199-000	Maint/Operation	120,000.00	0.00	0.00	120,000.00
TOTAL		**352,163.00**	**0.00**	**0.00**	**352,163.00**

Resource Personnel

Dr. René Gutiérrez
Mario H. Salinas
Mary De Luna
Rigoberto V. Abrego
Maria Luisa Guerra
Amaro Tijerina
Sylvia D. Garcia
Robert J. Saenz
Kay W. Green

Board Policy Reference

This is in accordance with the Board Policy CH (Legal), Purchasing Law Bidding Requirements.

Prepared by: Mary De Luna, Director of Child Nutrition

Prepared by: Robert J. Saenz, Director of Maintenance/Facilities

Approved by: Mario H. Salinas, Asst. Supt. District Administration

Within Budgetary Allocations: Sylvia D. Garcia, Director of Finance

Approved by: Rigoberto V. Abrego, Asst. Supt. Finance/Operations

Recommended by: Dr. René Gutiérrez, Superintendent of Schools

08-30-10P03:08 RCVD

EXHIBIT_____ PAGE(S)_____

Notes for Renewal
Bid 09-06, Air Conditioner and Refrigerator Supplies
Second and Final Renewal
September 14, 2010

1. **USER DEPARTMENT:** This bid was requested by the Maintenance & Facilities and Child Nutrition Departments. Mr. Robert Saenz, and Mrs. Mary De Luna will be present to answer any questions regarding this bid.

2. **TYPE OF BID:** This is a term bid beginning October 1, 2010 or soon thereafter and ending September 30, 2011. This is the second and final contract renewal.

3. **BID RENEWAL:** Mr. Robert J. Saenz, Mrs. Mary De Luna, and the vendor have agreed in writing to renew the term contract. Final recommendations to the board are done by the Superintendent of Schools.

4. **ORDERING INFORMATION:** Maintenance & Facilities and the Child Nutrition Departments will prepare purchase orders on an as needed basis after the Board of Trustee approval.

5. **APPROXIMATE AMOUNT SPENT LAST YEAR:**

Child Nutrition	$14,500.00
Maintenance & Facilities	$75,000.00
TOTAL	**$89,500.00**

6. **AMENDED BID AWARD RECOMMENDATION:**

VENDOR	ESTIMATED AWARD RECOMMENDATION
Johnstone Supply 3107 North Sugar Pharr, TX 78577 Contact: Willie Gonzalez PH: 956-783-1036	$90,000.00
ESTIMATED TOTAL AWARD	**$90,000.00**

EXHIBIT_____

EDINBURG CONSOLIDATED INDEPENDENT SCHOOL DISTRICT
PURCHASING DEPARTMENT
DRAWER 990
EDINBURG, TEXAS 78540
PHONE: (956) 289-2311
FAX (956) 383-7687

287-9378

MEMORANDUM

Date: June 17, 2010

TO: Robert J. Saenz, Coordinator of Maintenance & Facilities

FROM: Kay W. Green, Buyer

SUBJECT: **RENEWAL OF BID 09-06, AIR CONDITIONER & REFRIGERATOR SUPPLIES**

There is an option to renew the above mentioned bid Attached is the detailed information on what was awarded last year Hopefully, this will assist you in making your decision.

Please sign and return back to me for processing. Let me know as soon as possible, if you have any questions, give me a call at 956-289-2311 Ext. 2178.

Yes, I want to renew: ✓ _____

No, I don't want to renew: _____

Reason why you don't want to renew:

_____
_____
_____
_____
_____
_____

THANK YOU!

Nondiscrimination Statement

It is the policy of Edinburg CISD not to discriminate on the basis of sex, age, handicap, religion, race, color, or national origin in its educational programs.

EXHIBIT_____

EDINBURG CONSOLIDATED INDEPENDENT SCHOOL DISTRICT
PURCHASING DEPARTMENT
DRAWER 990
EDINBURG, TEXAS 78540
PHONE: (956) 289-2311
FAX (956) 383-7687

MEMORANDUM

Date: June 17, 2010

TO: Mary De Luna, Director of Child Nutrition

FROM: Kay W. Green, Buyer

SUBJECT: **RENEWAL OF BID 09-06, AIR CONDITIONER & REFRIGERATOR SUPPLIES**

There is an option to renew the above mentioned bid. Attached is the detailed information on what was awarded last year. Hopefully, this will assist you in making your decision.

Please sign and return back to me for processing. Let me know as soon as possible, if you have any questions, give me a call at 956-289-2311 Ext. 2178.

Yes, I want to renew: ✓ Mary De Luna

No, I don't wilnt to renew: _____

Reason why you don't want to renew:

_____

_____

_____

_____

_____

_____

THANK YOU!

Nondiscrimination Statement

It is the policy of Edinburg CISD not to discriminate on the basis of sex, age, handicap, religion, race, color, or national origin in its'

EXHIBIT_____

EDINBURG CONSOLIDATED INDEPENDENT SCHOOL DISTRICT
PURCHASING DEPARTMENT
411 North 8th/DRAWER 990
EDINBURG, TEXAS 78541
PHONE: (956) 289-2311
FAX (956) 383-7687

June 22, 2010

Dear Johnstone Supplies, FAX: 956-783-5106

REF: REQUEST FOR INFORMATION - FOR CONTRACT RENEWAL
BID 09-06, AIR CONDITIONER AND REFRIGERATOR SUPPLIES

Our original bid specifications provided for an extension of the awarded contract if both parties agreed in writing on the extension and if the unit prices, discounts, terms and conditions remained the same as the cost for contract renewal. If accepted by the Edinburg CISD, the renewal contract will start October 1, 2010 or soon thereafter and end September 30, 2011. Please see attachment for current information.

We are interested in knowing whether your company will extend this contract for an additional contract period. ***If your renewal extension is accepted by the Edinburg CISD, this form will be signed and faxed back to your company to notify you of the renewed contract. The Edinburg CISD reserves the right to accept or reject the renewal of this contract and to bid out a new contract.***

Please call Kay W. Green, Buyer at 956-289-2311, Ext. 2178 or e-mail at k.green@ecisd.us if you have any questions regarding this contract.

YES: _____, per original discounts, terms, and conditions.
Vendor Signature

NO: _____, I am not interested in extending my awarded contract.
Vendor Signature

Johnstone Supply of Pharr TX
Company Name

Approved for Renewal:

_____
Edinburg CISD Date

EXHIBIT_____

APPROVAL OF BID 09-149, LAMINATING AND TRANSPARENCY FILM – FIRST AND FINAL RENEWAL

Superintendent's Recommendation

That the Board of Trustees approve the recommendation to accept the Laminating and Transparency Film term bid for the Edinburg C.I.S.D. campuses, which is indicated in the attached bid tabulation as being the most favorable and advantageous to the District.

Rationale

This bid will be used district-wide for the purchase of laminating and transparency film only. Each campus and department will prepare their purchase orders following Board of Trustee approval.

Administration sought competitive sealed bids for Laminating and Transparency film. Bid opening was held at the Business Office Building on June 8, 2009, at 3:00 P.M., where ten (10) proposals were received, opened, and read aloud.

Budgetary Information

TOTAL ESTIMATED AWARD RECOMMENDATION: $24,000.00

ACCOUNT NUMBERS	APPROPRIATION	ENCUMBRANCE	EXPENDITURE	BALANCE
XXX-XX-6399-XX-XXX-1XX-000	$7,308,576.00	0.00	0.00	$7,308,576.00
TOTAL	**$7,308,576.00**	**0.00**	**0.00**	**$7,308,576.00**

Resource Personnel

Dr. René Gutiérrez
Maria Luisa Guerra
Rigoberto V. Abrego
Amaro Tijerina
Sylvia D. Garcia
Soledad Schuller

Board Policy Reference

This is in accordance with the Board Policy CH (Local) Purchasing Bidding Requirements.

Prepared by: _____
Amaro Tijerina, Coordinator for Purchasing Department

Approved by: _____
Maria Luisa Guerra, Asst. Supt. for Instruction & Support Services

Within Budgetary Allocations: _____
Sylvia Garcia, Director for Finance

Approved by: _____
Rigoberto V. Abrego, Asst. Supt. for Finance/Operations

Recommended by: _____
Dr. René Gutiérrez, Superintendent of Schools

EXHIBIT_____, PAGE(S)_____

Notes for Bid Tabulation
BID 09-149, LAMINATING AND TRANSPARENCY FILM-FIRST AND FINAL RENEWAL
September 14, 2010

1. **USER DEPARTMENT**: This bid will be used district-wide for the purchase of laminating and transparency film.

2. **TYPE OF BID**: This is a term bid beginning September 15, 2010 and ending August 31, 2011. This is the first and final renewal contract.

3. **BID EVALUATION**: This bid was evaluated by Mr. Amaro Tijerina, Coordinator for Purchasing Department. The Superintendent of Schools will make the final recommendations to the board are done by the Superintendent of Schools.

4. **ORDERING INFORMATION**: Each campus and department will prepare purchase orders following Board of Trustee approval.

5. **UNIT PRICES**: Prices are good for the term of the contract.

6. **APPROXIMATE AMOUNT SPENT LAST YEAR:** $24,000.00

7. **TOTAL ESTIMATED AWARD RECOMMENDATION:** $24,000.00

8. **BUDGET INFORMATION**: Each campus and department will issue purchase orders based on their approved budgets for laminating and transparency supplies.

9. **BID EVALUATION NOTES: All items were awarded to low bidders except for item #5. The low bidder for this item, was asking for a minimum order of $1,950.00 per order, the item was rejected and re-awarded to the second lowest bidder.**

EXHIBIT_____

EDINBURG CONSOLIDATED INDEPENDENT SCHOOL DISTRICT
PURCHASING DEPARTMENT
411 North 8th/DRAWER 990
EDINBURG, TEXAS 78541
PHONE: (956) 289-2311
FAX (956) 383-7687

August 2, 2010

USI Education & Government Sal
98 Fort Path Rd
Madison, CT 06443
ATTN: Frederick Franco

Fax: 203-245-7337

Dear Mr. Franco;

REF: REQUEST FOR INFORMATION - FOR CONTRACT RENEWAL
BID 09-149, LAMINATING FILM & TRANSPARENCY

Our original bid specifications provided for an extension of the awarded contract if both parties agreed in writing on the extension and if the unit prices, discounts, terms and conditions remained the same as the cost for contract renewal. If accepted by the Edinburg CISD, the renewal contract will start September 1, 2010 or soon thereafter and end August 31, 2011.

We are interested in knowing whether your company will extend this contract for an additional year. ***If your renewal extension is accepted by the Edinburg CISD, this form will be signed and faxed back to your company to notify you of the renewed contract. The Edinburg CISD reserves the right to accept or reject the renewal of this contract and to bid out a new contract.***

Please call Soledad Schuller, Buyer at 956-289-2311, Ext. 2138 if you have any questions regarding this contract.

YES: _____, per original discounts, terms, and conditions.
Vendor Signature

NO: _____, I am not interested in extending my awarded contract.
Vendor Signature

Approved for Renewal:

_____
Edinburg CISD Date

EXHIBIT_____

EDINBURG CONSOLIDATED INDEPENDENT SCHOOL DISTRICT
PURCHASING DEPARTMENT
411 North 8th/DRAWER 990
EDINBURG, TEXAS 78541
PHONE: (956) 289-2311
FAX (956) 383-7687

August 2, 2010

Fax: 877-684-3334

Competitive Edge
986 Kennedy Avenue, Suite C
Schererville, IN 46375
ATTN: Mitch Goldman

Dear Mr. Goldman;

REF: REQUEST FOR INFORMATION - FOR CONTRACT RENEWAL
BID 09-149, LAMINATING FILM & TRANSPARENCY

Our original bid specifications provided for an extension of the awarded contract if both parties agreed in writing on the extension and if the unit prices, discounts, terms and conditions remained the same as the cost for contract renewal. If accepted by the Edinburg CISD, the renewal contract will start September 1, 2010 or soon thereafter and end August 31, 2011.

We are interested in knowing whether your company will extend this contract for an additional year. ***If your renewal extension is accepted by the Edinburg CISD, this form will be signed and faxed back to your company to notify you of the renewed contract. The Edinburg CISD reserves the right to accept or reject the renewal of this contract and to bid out a new contract.***

Please call Soledad Schuller, Buyer at 956-289-2311, Ext. 2138 if you have any questions regarding this contract.

YES:_____, per original discounts, terms, and conditions.
Vendor Signature

NO:_____, I am not interested in extending my awarded contract.
Vendor Signature

Approved for Renewal:

_____
Edinburg CISD Date

EXHIBIT_____

EDINBURG CONSOLIDATED INDEPENDENT SCHOOL DISTRICT
PURCHASING DEPARTMENT
411 North 8th/DRAWER 990
EDINBURG, TEXAS 78541
PHONE: (956) 289-2311
FAX (956) 383-7687

August 2, 2010

Gateway Printing & Office
315 South Closner
Edinburg, Texas 77902
ATTN: Lupe Najera III

Fax: 956-383-4674

Dear Mr. Najera;

REF: REQUEST FOR INFORMATION - FOR CONTRACT RENEWAL BID 09-149, LAMINATING FILM & TRANSPARENCY

Our original bid specifications provided for an extension of the awarded contract if both parties agreed in writing on the extension and if the unit prices, discounts, terms and conditions remained the same as the cost for contract renewal. If accepted by the Edinburg CISD, the renewal contract will start September 1, 2010 or soon thereafter and end August 31, 2011.

We are interested in knowing whether your company will extend this contract for an additional year. ***If your renewal extension is accepted by the Edinburg CISD, this form will be signed and faxed back to your company to notify you of the renewed contract. The Edinburg CISD reserves the right to accept or reject the renewal of this contract and to bid out a new contract.***

Please call Soledad Schulier, Buyer at 956-289-2311, Ext. 2138 if you have any questions regarding this contract.

YES: B. Mad, per original discounts, terms, and conditions.
Vendor Signature

NO:_____, I am not interested in extending my awarded contract.
Vendor Signature

Approved for Renewal:

_____
Edinburg CISD Date

EXHIBIT_____

EDINBURG CONSOLIDATED INDEPENDENT SCHOOL DISTRICT
PURCHASING DEPARTMENT
411 North 8th/DRAWER 990
EDINBURG, TEXAS 78541
PHONE: (956) 289-2311
FAX (956) 383-7687

August 2, 2010

J E Foss Company, Inc.
P.O. BOX 357
3328-B Industrial Blvd
Bethel Park, PA 15102
ATTN: Arthur A. Ferrara

Fax: 412-831-3792

Dear Mr. Ferrara;

REF: REQUEST FOR INFORMATION - FOR CONTRACT RENEWAL
BID 09-149, LAMINATING FILM & TRANSPARENCY

Our original bid specifications provided for an extension of the awarded contract if both parties agreed in writing on the extension and if the unit prices, discounts, terms and conditions remained the same as the cost for contract renewal. If accepted by the Edinburg CISD, the renewal contract will start September 1, 2010 or soon thereafter and end August 31, 2011.

We are interested in knowing whether your company will extend this contract for an additional year. ***If your renewal extension is accepted by the Edinburg CISD, this form will be signed and faxed back to your company to notify you of the renewed contract. The Edinburg CISD reserves the right to accept or reject the renewal of this contract and to bid out a new contract.***

Please call Soledad Schuller, Buyer at 956-289-2311, Ext. 2138 if you have any questions regarding this contract.

YES:_____, per original discounts, terms, and conditions.
Vendor Signature

NO:_____, I am not interested in extending my awarded contract.
Vendor Signature

Approved for Renewal:

_____
Edinburg CISD Date

FAXED

08-02-10PM

EXHIBIT_____

EDINBURG CONSOLIDATED INDEPENDENT SCHOOL DISTRICT
EXTENDED AMOUNT ANALYSIS

CONTROL: 09 LAMINATE
PAGE/PART: 1/1
BUYER: SOLEDAD SCHULLER
OPEN DATE: 06/12/09
EFFECTIVE: 07/29/09
EXPIRATION: 06/30/10
ENTERED: 06/09/09
PRINTED: 08/25/10

DELIVERY DAYS:
TERMS:
OTHER 1:
OTHER 2:
NOTE:
CODES:

			VENDOR 1 (279)	VENDOR 2 (1011)	VENDOR 3 (9156)
			USI EDUCATION & GOVERNMEN	J E FOSS COMPANY INC	COMPETITIVE EDGE
			MADISON CT 06443	BETHEL PARK PA 15102	SCHERERVILLE IN 46375
			14	14	7
			NET 30	NET WO	NET 30
			FREDERICK FRANCO	GARY A.SPEZIALETTI	MITCH GOLDMAN
665-42-10010-3	LAMINATING FILM, 1.5 MIL, 18" x 500' per roll, 1" core	1 BOX	507.20* A ✓	678.00	530.00
665-42-10020-2	LAMINATING FILM, 1.5 MIL, 25" x 500' per roll, 1" core	1 BOX	1268.00* A ✓	1400.00	1276.00
665-42-10022-8	LAMINATING FILM, 1.5 MIL, 27" x 500' per roll, 1" core, 2 rolls	1 BOX	1369.60	1840.00	1320.00* A ✓
665-42-10030-1	OVERHEAD TRANSPARENCIES FILM, for infrared transparency makers,	1 BOX	NB	579.80	NB
665-42-10040-0	TRANSPARENCY FILM FOR XEROX 5065 & 1090 PLAIN PAPER COPIERS, OVERHEAD	1 BOX	NB	179.00 A ✓	NB
665-42-10050-9	TRANSPARENCY FILM FOR HP INKJET PRINTERS, 8-1/2" x 11", for both black	1 BOX	NB	219.00* A ✓	284.00
665-42-10055-8	LAMINATING FILM, 27" x 250,1" core, 3 mil	1 BOX	694.80* A ✓	910.00	910.00
		TOTAL	$2,470.00	$398.00	$1320.00

ITEM COMMENTS
ITEM# VENDOR COMMENT

CODE DEFINITIONS

* Low Bid On Item
A AWARD RECOMMENDATION
LT Low Total
NB No Bid
NI DidNot Bid All Items
Q Different Quantity

EXHIBIT_____

EDINBURG CONSOLIDATED INDEPENDENT SCHOOL DISTRICT
EXTENDED AMOUNT ANALYSIS

CONTROL: 09 LAMINATE
PAGE/PART: 1/2 DELIVERY DAYS:
BUYER: SOLEDAD SCHULLER TERMS:
OPEN DATE: 06/12/09 OTHER 1:
EFFECTIVE: 07/29/09 OTHER 2:
EXPIRATION: 06/30/10 NOTE:
ENTERED: 06/09/09 CODES:
PRINTED: 08/25/10

			VENDOR 4 (217)	VENDOR 5 (7872)	VENDOR 6 (1157)
			GATEWAY PRINTING & OFFICE	CIELO OFFICE PRODUCTS, LL	CHUCKALS INC
			EDINBURG TX 78539	MCALLEN TX 78501	TACOMA WA 98402
			14	3	15
			NET 30	NET 30	NET 30
			BUTCH SHOON	DAVID BARRERA	MICHAEL HALL
665-42-10010-3	LAMINATING FILM, 1.5 MIL, 18" x 500' per roll, 1" core	1 BOX	710.00	NB	568.00
665-42-10020-2	LAMINATING FILM, 1.5 MIL, 25" x 500' per roll, 1" core	1 BOX	1476.00	2809.20	1278.00
665-42-10022-8	LAMINATING FILM, 1.5 MIL, 27" x 500' per roll, 1" core, 2 rolls	1 BOX	2128.00	3415.60	1398.00
665-42-10030-1	OVERHEAD TRANSPARENCIES FILM, for infrared transparency makers,	1 BOX	314.00* A	343.20	NB
665-42-10040-0	TRANSPARENCY FILM FOR XEROX 5065 & 1090 PLAIN PAPER COPIERS, OVERHEAD	1 BOX	250.00	273.20	110.00
665-42-10050-9	TRANSPARENCY FILM FOR HP INKJET PRINTERS, 8-1/2" x 11", for both black	1 BOX	435.00	881.00	265.00
665-42-10055-8	LAMINATING FILM, 27" x 250,1" core, 3 mil	1 BOX	1397.00	NB	935.00
		TOTAL	$314.00	0	0

EXHIBIT_____

EDINBURG CONSOLIDATED INDEPENDENT SCHOOL DISTRICT
EXTENDED AMOUNT ANALYSIS

CONTROL: 09 LAMINATE
PAGE/PART: 1/3
BUYER: SOLEDAD SCHULLER
OPEN DATE: 06/12/09
EFFECTIVE: 07/29/09
EXPIRATION: 06/30/10
ENTERED: 06/09/09
PRINTED: 08/25/10

DELIVERY DAYS:
TERMS:
OTHER 1:
OTHER 2:
NOTE:
CODES:

			VENDOR 7 (1109)	VENDOR 8 (7065)	VENDOR 9 (2631)
			KAYLOR'S SCHOOL SUPPLY	SCHOOL SPECIALTY	SOUTHWEST PLASTIC BINDING
			ALBERTVILLE AL 35951	GREENVILLE WI 54942	MARYLAND HEIGHTS MO 63043
			3	30	3
			NET 30	NET 30	NET 30
			TERRI KNOTT	JIMMIE WILSON	DALE M. CHRISTIANSEN
665-42-10010-3	LAMINATING FILM, 1.5 MIL, 18" x 500' per roll, 1" core	1 BOX	799.60	853.60	640.00
665-42-10020-2	LAMINATING FILM, 1.5 MIL, 25" x 500' per roll, 1" core	1 BOX	1519.20	1772.00	1600.00
665-42-10022-8	LAMINATING FILM, 1.5 MIL, 27" x 500' per roll, 1" core, 2 rolls	1 BOX	1999.20	2555.20	2000.00
665-42-10030-1	OVERHEAD TRANSPARENCIES FILM, for infrared transparency makers,	1 BOX	NB	361.40	NB
665-42-10040-0	TRANSPARENCY FILM FOR XEROX 5065 & 1090 PLAIN PAPER COPIERS, OVERHEAD	1 BOX	391.60	207.40	NB
665-42-10050-9	TRANSPARENCY FILM FOR HP INKJET PRINTERS, 8-1/2" x 11", for both black	1 BOX	NB	NB	NB
665-42-10055-8	LAMINATING FILM, 27" x 250,1" core, 3 mil	1 BOX	999.60	NB	984.40
		TOTAL	-0-	-0-	-0-

EXHIBIT_____

EDINBURG CONSOLIDATED INDEPENDENT SCHOOL DISTRICT
EXTENDED AMOUNT ANALYSIS

VENDOR 10 (1292)

ACCO BRANDS USA, LLC
LINCOLNSHIRE IL 60069

CONTROL: 09 LAMINATE
PAGE/PART: 1/4
BUYER: SOLEDAD SCHULLER
OPEN DATE: 06/12/09
EFFECTIVE: 07/29/09
EXPIRATION: 06/30/10
ENTERED: 06/09/09
PRINTED: 08/25/10

DELIVERY DAYS: 5
TERMS: NET 30
OTHER 1: RICHARD KRACHEY
OTHER 2:
NOTE:
CODES:

665-42-10010-3	LAMINATING FILM, 1.5 MIL, 18" x 500' per roll, 1" core	1 BOX	636.00
665-42-10020-2	LAMINATING FILM, 1.5 MIL, 25" x 500' per roll, 1" core	1 BOX	1383.20
665-42-10022-8	LAMINATING FILM, 1.5 MIL, 27" x 500' per roll, 1" core, 2 rolls	1 BOX	1904.00
665-42-10030-1	OVERHEAD TRANSPARENCIES FILM, for infrared transparency makers,	1 BOX	NB
665-42-10040-0	TRANSPARENCY FILM FOR XEROX 5065 & 1090 PLAIN PAPER COPIERS, OVERHEAD	1 BOX	NB
665-42-10050-9	TRANSPARENCY FILM FOR HP INKJET PRINTERS, 8-1/2" x 11", for both black	1 BOX	NB
665-42-10055-8	LAMINATING FILM, 27" x 250,1" core, 3 mil	1 BOX	1004.80
		TOTAL	0

EXHIBIT_____

APPROVAL OF BID 09-152, AWARDS & INCENTIVES-FIRST AND FINAL RENEWAL

Superintendent's Recommendation

That the Board of Trustees approve the recommendation to renew the term bid for the Award and Incentives term bid which is indicated in the attached renewal forms as being the most favorable and advantageous to the Edinburg CISD.

Rationale

This bid is on its final contract year. The administration sought competitive sealed bids on the above mentioned bid for the District. Bid opening was held at the Business Office Building on June 10, 2009, at 3:00 P.M. where seventeen (17) proposals were received, opened, and read aloud. Items to be purchased under this bid include, but are not limited to: balloons, kiddie sunglasses, whistles, balls, yo-yo's, jack set, t-shirts, teacher incentives, magic springs, insect stamps, friendship bracelets, kiddie visors, flying discs, pick-up games, pinwheels, spitters, and any other related Award & Incentive items. This will be utilized by all campuses and Departments throughout the District.

Budgetary Information

TOTAL ESTIMATED AWARD RECOMMENDATION: $178,000.00

Account	Description	Appropriation	Encumbrance	Expenditure	Balance
XXX-XX-6497-XX-XXX-1XX-000	Awards	$639,547.00	0.00	0.00	$639,547.00
	TOTAL	**$639,547.00**	**0.00**	**0.00**	**$639,547.00**

Resource Personnel

Dr. René Gutiérrez
Maria Luisa Guerra
Sylvia D. Garcia
Amaro Tijerina
Rigoberto V. Abrego
Soledad Schuller

Board Policy Reference

This is in accordance with the Board Policy CH, Purchasing Bidding Requirements.

Approved by: _____
Maria Luisa Guerra, Asst. Supt. for Instruction & Support Services

Within Budgetary Allocations: _____
Sylvia D. Garcia, Director of Finance

Approved by: _____
Rigoberto V. Abrego, Asst. Supt. for Finance/Operations

Recommended by: _____
Dr. René Gutiérrez, Superintendent of Schools

EXHIBIT_____PAGE(S)_____

Notes for Bid Tabulation
Bid 09-152, AWARDS & INCENTIVES-FIRST AND FINAL RENEWAL
September 14, 2010

1. **USER DEPARTMENTS**: This bid will be used by all campuses and departments for the purchase of Awards & Incentives.

2. **TYPE OF BID**: This bid is a term bid beginning September 15, 2010 or soon thereafter and ending August 31, 2011.

3. **BID EVALUATION**: This bid was evaluated by Mrs. Maria Luisa Guerra. Final recommendations to the board are done by the Superintendent of Schools.

4. **ORDERING INFORMATION:** All campuses and departments will prepare purchase orders on an as needed basis following Board of Trustee approval.

5. APPROXIMATE AMOUNT SPENT LAST YEAR: $177,848.00

6. TOTAL ESTIMATED AWARD RECOMMENDATION: $178,000.00

EXHIBIT_____

Notes for Bid Tabulation
Bid 09-152, AWARDS & INCENTIVES-FIRST AND FINAL RENEWAL
September 14, 2010

Annual Term contract period beginning September 15, 2010 or there after and ending August 31, 2011.

THREE QUOTES REQUIRED: Campus/Departments will be required to get three quotes on orders over $1,000.00.

BUYER: Contact Soledad Schuller @ 956-289-2311, ext. 2138 if you have any questions regarding this bid.

PRIMARY VENDORS

Campuses/Departments will use primary vendors first for the procurement of their items.
All orders over $1,000 will require (3) three quotes.

VENDOR	DISCOUNTS	NOTES
Oriental Trading Company, Inc 4206 South 108 Street Omaha, NE 68137 Contact: Joan Squire PH: 800-228-0038 npsbids@oriental.com	5%	Shipping order up to $25 = $6.99 $20.01 to $50 = $8.99 $50.01 to $75 = $10.99 $75.01 to $100 = $11.99 $100.01 to $125 = $12.99 $125.01 to $150 = $15.99 $150.01 over free No Restocking Fee No Min order
K C Advertizing Specialties, Inc 620 North McColl Road McAllen, TX 48501 Contact: Leroy Cadena PH: 956-682-5223 KCadspecialties@aol.com	10 – 50% Per Quote Basis	Shipping is included in price No Restocking Fee No Min order

EXHIBIT_____

APPROVED VENDORS

Campuses/Departments will use primary vendors first for the procurement of their items.
All orders over $1,000 will require (3) three quotes.

VENDOR	DISCOUNTS	NOTES
ABC Custom Advertising 1800 South Main St. #850 McAllen, TX 78503 Contact: Marti Miller PH: 956-631-3131 Marti_ABCCustom@yahoo.com	45 – 10%	No Shipping Fee No Restocking Fee Min order $100.00
Authentic Promotions 6151 Fair Oaks Blvd. Suite 103 Carmichael, CA 95608 Contact: Peter Carmazzi PH: 800-497-7765 peter@authenticpromotions.com	25% DEVIATIONS Silk screen add $25 Per color 2nd color imprint $.35 per color per item per application Embroidery Set up $25 per Logo ASI Setup $25 per color per application	Shipping is 3% of order No Restocking Fee Min order $250.00
Crestline Specialities Inc. 70 Mount Hope Avenue Lewiston, ME 04240 Contact: Mike Truchon PH: 800-221-7797 info@crestline.com	5%	Shipping varies by product 15% Restocking on non imprinted items Min order $100.00
Curtis 1000, Inc. PO Box 4547 McAllen, TX 78502 Contact: Oscar Zapata PH: 956-605-1309 OZapata@Curtis1000.com	15 – 20%	Shipping to be determined at time of quote No Restocking Fee Min order $150.00
Gateway Printing & Office dba Jones & Cook Stationers 315 South Closner Contact: Butch Shook PH: 956-383-3861 butch@gatewayp.com	15% on all quantity price bracket in Jones & Cook Spectrum Catalog 27% Edu teaching supply 10% computer items, furniture, rugs, electronics	No Shipping Fee No Restocking Fee No Min order required
Gulf Data Products 810 East Harrison Harlingen, TX 78550 Contact: R Kevin Kanipe PH: 800-825-5395 Gulfdata2@sbcglobal.net	10% orders $300 - $499 15% orders $500 - $699 25% orders $700 - $1,000	Shipping on orders less than $250.00 No Restocking Fee Min order $100.00
C H Harden Advertising Specialties 240 West St, Charles Brownsville, TX 78522 Contact: Skip Harden PH: 800-643-9103 chharden@sbcglobal.net	20%	Shipping charge stated before order placed No Restocking Fee Min order catalog requirements
4 Imprint 101 Comerce Oshkosh, WI 54901 Contact: Mary Vamosy PH: 888-238-9482 mvamosy@4imprint.com	10% **MUST USE COUPON CODE C849 FOR DISCOUNT**	Shipping will be charged No Restocking Fee Imprint items require different amounts to get pricing Please call ahead of ordering for exact pricing quote
Lamac, Inc. PO Box 1629 McAllen, TX 78505 Contact: Salvador Gonzalez Jr. salthebell@aol.com	10%	Shipping 10% of order Orders over $200 no fee No Restocking Fee Min. order $25.00

EXHIBIT_____

Pamploma Sports 1229 East Hackberry McAllen, TX 78501 Contact: Benjamin Escobar PH: 956-631-0044 E070393@aol.com	1% on orders $100 to $299 3% orders $300 to $499 6% orders $500 to $699 10% orders $700 to $1,000	No Shipping Fee No Restocking Fee No Min Order Required
Positive Promotions, Inc 15 Gilpin Avenue Hauppauge, NY 11788 Contact: Steve Carapella PH: 877-258-1225 scarapella@positivepromotions.com	Up to 10%	Shipping $0 to $50=$10.95 $50.01 to $100 = $14.45 $100.01 to $150 =$17.45 $150.01 TO $200 = $21.45 200.01 TO $250 = $26.45 OVER $250 = 10.5% ORDER No Restocking Fee Min Order $35.00
Promo Master PO Box 639 Mission, TX 78573 Contact: Edna J. Pena PH: 956-585-3112 ejppromos@att.net	5 – 40% up to $299 10 – 40% from $300 to $1,000	No Shipping Fee No Restocking Fee Min order $10.00
Renaissance Learning 2911 Peach Street, PO Box 8036 Wisconsin Rapids, WI 54495 Contact: Tracie Grossman PH: 800-338-4204 Dept10@renlearn.com	Volume discounts may apply call: 800-338-4202	Current Shipping Fees in catalog Restocking free 30 days 31 to 60 days $25.00 Some Min orders apply call to find out
Affinity Wear, Inc. 2608 W. Freddy Gonzalez Dr Edinburg, TX 78539 Contact: Laurie O. Ruiz PH: 956-380-1122 customerservice@affinitywear.net	5% from $100 to $1,000	Shipping includes getting product to store & drop ship to school No returns unless defective Garment pricing min 12
Stitches 4 All 1800 South Main Suite 849 McAllen, TX 78503 Contact: Delores Escobar PH: 956-631-3144 meowwear@yahoo.com	45 – 10%	No Shipping Fee No Restocking Fee Min order

EXHIBIT_____

EDINBURG CONSOLIDATED INDEPENDENT SCHOOL DISTRICT
PURCHASING DEPARTMENT
411 North 8th/DRAWER 990
EDINBURG, TEXAS 78541
PHONE: (956) 289-2311
FAX (956) 383-7887

June 16, 2010

Oriental Trading Company, Inc.
4206 South 108 Street
Omaha, NE 68137
Contact: Joan Squire

Fax: 877-564-4440

ATTENTION: Ms. Squire;

REF: REQUEST FOR INFORMATION - FOR CONTRACT RENEWAL
BID 09-152, AWARDS & INCENTIVES

Our original bid specifications provided for an extension of the awarded contract if both parties agreed in writing on the extension and if the unit prices, discounts, terms and conditions remained the same as the cost for contract renewal. If accepted by the Edinburg CISD, the renewal contract will start September 1, 2010 or soon thereafter and end August 31, 2011.

We are interested in knowing whether your company will extend this contract for an additional year. ***If your renewal extension is accepted by the Edinburg CISD, this form will be signed and faxed back to your company to notify you of the renewed contract. The Edinburg CISD reserves the right to accept or reject the renewal of this contract and to bid out a new contract.***

Please call Soledad Schuller, Buyer at 956-289-2311, Ext. 2138 if you have any questions regarding this contract.

YES: Joan Squire, per original discounts, terms, and conditions. 6/18/10
Vendor Signature

NO:_____, I am not interested in extending my awarded contract.
Vendor Signature

Approved for Renewal:

_____
Edinburg CISD Date

EXHIBIT_____

EDINBURG CONSOLIDATED INDEPENDENT SCHOOL DISTRICT
PURCHASING DEPARTMENT
411 North 8th/DRAWER 990
EDINBURG, TEXAS 78541
PHONE: (956) 289-2311
FAX (956) 383-7687

June 16, 2010

KC Advertising Specialties, Inc.
620 N. McColl
McAllen, TX 78501
Contact: Leroy Cadena

Fax: 682-3299

ATTENTION: Mr. Cadena;

REF: REQUEST FOR INFORMATION - FOR CONTRACT RENEWAL
BID 09-152, AWARDS & INCENTIVES

Our original bid specifications provided for an extension of the awarded contract if both parties agreed in writing on the extension and if the unit prices, discounts, terms and conditions remained the same as the cost for contract renewal. If accepted by the Edinburg CISD, the renewal contract will start September 1, 2010 or soon thereafter and end August 31, 2011.

We are interested in knowing whether your company will extend this contract for an additional year. ***If your renewal extension is accepted by the Edinburg CISD, this form will be signed and faxed back to your company to notify you of the renewed contract. The Edinburg CISD reserves the right to accept or reject the renewal of this contract and to bid out a new contract.***

Please call Soledad Schuller, Buyer at 956-289-2311, Ext. 2138 if you have any questions regarding this contract.

YES: _____, per original discounts, terms, and conditions.
Vendor Signature LEROY CADENA 6-16-10

NO: _____, I am not interested in extending my awarded contract.
Vendor Signature

Approved for Renewal:

_____
Edinburg CISD Date

EXHIBIT_____

EDINBURG CONSOLIDATED INDEPENDENT SCHOOL DISTRICT
PURCHASING DEPARTMENT
411 North 8th/DRAWER 990
EDINBURG, TEXAS 78541
PHONE: (956) 289-2311
FAX (956) 383-7687

June 16, 2010

ABC Custom Advertising
1800 South Main St. #850
McAllen, TX 78503
Contact: Marti Miller

Fax: 631-3150

ATTENTION: Mr. Miller;

REF: REQUEST FOR INFORMATION - FOR CONTRACT RENEWAL
BID 09-152, AWARDS & INCENTIVES

Our original bid specifications provided for an extension of the awarded contract if both parties agreed in writing on the extension and if the unit prices, discounts, terms and conditions remained the same as the cost for contract renewal. If accepted by the Edinburg CISD, the renewal contract will start September 1, 2010 or soon thereafter and end August 31, 2011.

We are interested in knowing whether your company will extend this contract for an additional year. ***If your renewal extension is accepted by the Edinburg CISD, this form will be signed and faxed back to your company to notify you of the renewed contract. The Edinburg CISD reserves the right to accept or reject the renewal of this contract and to bid out a new contract.***

Please call Soledad Schuller, Buyer at 956-289-2311, Ext. 2138 if you have any questions regarding this contract.

YES: Marti Miller, per original discounts, terms, and conditions.
Vendor Signature

NO:_____, I am not interested in extending my awarded contract.
Vendor Signature

Approved for Renewal:

_____
Edinburg CISD Date

EXHIBIT_____

EDINBURG CONSOLIDATED INDEPENDENT SCHOOL DISTRICT
PURCHASING DEPARTMENT
411 North 8th/DRAWER 990
EDINBURG, TEXAS 78541
PHONE: (956) 289-2311
FAX (956) 383-7687

June 16, 2010

Authentic Promotions
4640 Marconi Avenue, Suite 5
Sacramento, CA 95821
Contact: Peter Carmazu

Fax: 800-497-7706

NEW ADDRESS
Authentic Promotions.com
6151 Fair Oaks Blvd.
Suite 103
Carmichael, CA 95608

ATTENTION: Mr. Carmazu;

REF: REQUEST FOR INFORMATION - FOR CONTRACT RENEWAL
BID 09-152, AWARDS & INCENTIVES

Our original bid specifications provided for an extension of the awarded contract if both parties agreed in writing on the extension and if the unit prices, discounts, terms and conditions remained the same as the cost for contract renewal. If accepted by the Edinburg CISD, the renewal contract will start September 1, 2010 or soon thereafter and end August 31, 2011.

We are interested in knowing whether your company will extend this contract for an additional year. ***If your renewal extension is accepted by the Edinburg CISD, this form will be signed and faxed back to your company to notify you of the renewed contract. The Edinburg CISD reserves the right to accept or reject the renewal of this contract and to bid out a new contract.***

Please call Soledad Schuller, Buyer at 956-289-2311, Ext. 2138 if you have any questions regarding this contract.

YES:_____, per original discounts, terms, and conditions.
Vendor Signature

NO:_____, I am not interested in extending my awarded contract.
Vendor Signature

Approved for Renewal:

_____
Edinburg CISD Date

EXHIBIT_____

EDINBURG CONSOLIDATED INDEPENDENT SCHOOL DISTRICT
PURCHASING DEPARTMENT
411 North 8th/DRAWER 990
EDINBURG, TEXAS 78541
PHONE: (956) 289-2911
FAX (956) 383-7687

June 16, 2010

JUN 16 2010

Crestline Specialties Inc.
P.O. BOX 2027
70 MT. Hope Avenue
Lewiston, ME 04241
Contact: BIDS

Fax: 800-242-8290

ATTENTION: BIDS;

REF: REQUEST FOR INFORMATION - FOR CONTRACT RENEWAL BID 09-152, AWARDS & INCENTIVES

Our original bid specifications provided for an extension of the awarded contract if both parties agreed in writing on the extension and if the unit prices, discounts, terms and conditions remained the same as the cost for contract renewal. If accepted by the Edinburg CISD, the renewal contract will start September 1, 2010 or soon thereafter and end August 31, 2011.

We are interested in knowing whether your company will extend this contract for an additional year. ***If your renewal extension is accepted by the Edinburg CISD, this form will be signed and faxed back to your company to notify you of the renewed contract. The Edinburg CISD reserves the right to accept or reject the renewal of this contract and to bid out a new contract.***

Please call Soledad Schuller, Buyer at 956-289-2311, Ext. 2138 if you have any questions regarding this contract.

YES: _____, per original discounts, terms, and conditions.
Vendor Signature

NO: _____, I am not interested in extending my awarded contract.
Vendor Signature

Approved for Renewal:

_____
Edinburg CISD Date

EXHIBIT_____

EDINBURG CONSOLIDATED INDEPENDENT SCHOOL DISTRICT
PURCHASING DEPARTMENT
411 North 8th/DRAWER 990
EDINBURG, TEXAS 78541
PHONE: (956) 289-2311
FAX (956) 383-7687

June 16, 2010

Curtis 1000, Inc.
P.O. BOX 4547
McAllen, TX 78502
Contact: Oscar Zapata

Fax: Ozapata@curtis1000.com

ATTENTION: Ms. Zapata;

REF: REQUEST FOR INFORMATION - FOR CONTRACT RENEWAL
BID 09-152, AWARDS & INCENTIVES

Our original bid specifications provided for an extension of the awarded contract if both parties agreed in writing on the extension and if the unit prices, discounts, terms and conditions remained the same as the cost for contract renewal. If accepted by the Edinburg CISD, the renewal contract will start September 1, 2010 or soon thereafter and end August 31, 2011.

We are interested in knowing whether your company will extend this contract for an additional year. ***If your renewal extension is accepted by the Edinburg CISD, this form will be signed and faxed back to your company to notify you of the renewed contract. The Edinburg CISD reserves the right to accept or reject the renewal of this contract and to bid out a new contract.***

Please call Soledad Schuller, Buyer at 956-289-2311, Ext. 2138 if you have any questions regarding this contract.

YES: _____ per original discounts, terms, and conditions. 6/17/10
Vendor Signature

NO: _____ I am not interested in extending my awarded contract.
Vendor Signature

Approved for Renewal:

_____
Edinburg CISD Date

FAXED

06-16-10P04:12 RC

EXHIBIT_____

EDINBURG CONSOLIDATED INDEPENDENT SCHOOL DISTRICT
PURCHASING DEPARTMENT
411 North 8th/DRAWER 990
EDINBURG, TEXAS 78541
PHONE: (956) 289-2311
FAX (956) 383-7687

June 15, 2010

Gateway Printing & Office dba
Jones & Cook Stationers
315 South Closner
Edinburg, TX 78541
Contact: Butch Shook

Fax: 383-4674

ATTENTION: Mr. Shook;

REF: REQUEST FOR INFORMATION - FOR CONTRACT RENEWAL
BID 09-152, AWARDS & INCENTIVES

Our original bid specifications provided for an extension of the awarded contract if both parties agreed in writing on the extension and if the unit prices, discounts, terms and conditions remained the same as the cost for contract renewal. If accepted by the Edinburg CISD, the renewal contract will start September 1, 2010 or soon thereafter and end August 31, 2011.

We are interested in knowing whether your company will extend this contract for an additional year. ***If your renewal extension is accepted by the Edinburg CISD, this form will be signed and faxed back to your company to notify you of the renewed contract. The Edinburg CISD reserves the right to accept or reject the renewal of this contract and to bid out a new contract.***

Please call Soledad Schuller, Buyer at 956-289-2311, Ext. 2138 if you have any questions regarding this contract.

YES: B. Shook, per original discounts, terms, and conditions.
Vendor Signature

NO:_____, I am not interested in extending my awarded contract.
Vendor Signature

Approved for Renewal:

_____
Edinburg CISD Date

EXHIBIT_____

EDINBURG CONSOLIDATED INDEPENDENT SCHOOL DISTRICT
PURCHASING DEPARTMENT
411 North 8th/DRAWER 990
EDINBURG, TEXAS 78541
PHONE: (956) 289-2311
FAX (956) 383-7687

FAXED

June 15, 2010

Gulf Data Products
810 East Harrison
Harlingen, TX 78550
Contact: R. Kevin Kanipe

Fax: 956-425-5535

ATTENTION: Mr. Kanipe;

REF: REQUEST FOR INFORMATION - FOR CONTRACT RENEWAL
BID 09-152, AWARDS & INCENTIVES

Our original bid specifications provided for an extension of the awarded contract if both parties agreed in writing on the extension and if the unit prices, discounts, terms and conditions remained the same as the cost for contract renewal. If accepted by the Edinburg CISD, the renewal contract will start September 1, 2010 or soon thereafter and end August 31, 2011.

We are interested in knowing whether your company will extend this contract for an additional year. ***If your renewal extension is accepted by the Edinburg CISD, this form will be signed and faxed back to your company to notify you of the renewed contract. The Edinburg CISD reserves the right to accept or reject the renewal of this contract and to bid out a new contract.***

Please call Soledad Schuller, Buyer at 956-289-2311, Ext. 2138 if you have any questions regarding this contract.

YES: Kevin Kanipe, per original discounts, terms, and conditions.
Vendor Signature

NO:_____, I am not interested in extending my awarded contract.
Vendor Signature

Approved for Renewal:

_____
Edinburg CISD Date

EXHIBIT_____

EDINBURG CONSOLIDATED INDEPENDENT SCHOOL DISTRICT
PURCHASING DEPARTMENT
411 North 8th/DRAWER 990
EDINBURG, TEXAS 78541
PHONE: (956) 289-2311
FAX (956) 383-7687

June 15, 2010

CH Harden Advertising Specialties
240 West St. Charles
Brownsville, TX 78552
Contact: Skip Harden

Fax: 956-542-6733

ATTENTION: Mr. Harden;

REF: REQUEST FOR INFORMATION - FOR CONTRACT RENEWAL
BID 09-152, AWARDS & INCENTIVES

Our original bid specifications provided for an extension of the awarded contract if both parties agreed in writing on the extension and if the unit prices, discounts, terms and conditions remained the same as the cost for contract renewal. If accepted by the Edinburg CISD, the renewal contract will start September 1, 2010 or soon thereafter and end August 31, 2011.

We are interested in knowing whether your company will extend this contract for an additional year. ***If your renewal extension is accepted by the Edinburg CISD, this form will be signed and faxed back to your company to notify you of the renewed contract. The Edinburg CISD reserves the right to accept or reject the renewal of this contract and to bid out a new contract.***

Please call Soledad Schuller, Buyer at 956-289-2311, Ext. 2138 if you have any questions regarding this contract.

6/17/10

YES: Skip Harden, per original discounts, terms, and conditions.
Vendor Signature

NO:_____, I am not interested in extending my awarded contract.
Vendor Signature

Approved for Renewal:

_____
Edinburg CISD Date

EXHIBIT_____

EDINBURG CONSOLIDATED INDEPENDENT SCHOOL DISTRICT
PURCHASING DEPARTMENT
411 North 8th/DRAWER 990
EDINBURG, TEXAS 78541
PHONE: (956) 289-2311
FAX (956) 383-7687

June 15, 2010

4 Imprint
101 Commerce St.
Oshkosh, WI 54901
Contact: Mary Vamosy

Fax: 800-355-5043

ATTENTION: Mr. Vamosy;

REF: REQUEST FOR INFORMATION - FOR CONTRACT RENEWAL
BID 09-152, AWARDS & INCENTIVES

Our original bid specifications provided for an extension of the awarded contract if both parties agreed in writing on the extension and if the unit prices, discounts, terms and conditions remained the same as the cost for contract renewal. If accepted by the Edinburg CISD, the renewal contract will start September 1, 2010 or soon thereafter and end August 31, 2011.

We are interested in knowing whether your company will extend this contract for an additional year. ***If your renewal extension is accepted by the Edinburg CISD, this form will be signed and faxed back to your company to notify you of the renewed contract. The Edinburg CISD reserves the right to accept or reject the renewal of this contract and to bid out a new contract.***

Please call Soledad Schuller, Buyer at 956-289-2311, Ext. 2138 if you have any questions regarding this contract.

YES: Mary Vamosy, per original discounts, terms, and conditions.
Vendor Signature

NO:_____, I am not interested in extending my awarded contract.
Vendor Signature

Approved for Renewal:

_____
Edinburg CISD Date

EXHIBIT_____

EDINBURG CONSOLIDATED INDEPENDENT SCHOOL DISTRICT
PURCHASING DEPARTMENT
411 North 8th/DRAWER 990
EDINBURG, TEXAS 78541
PHONE: (956) 289-2311
FAX (956) 383-7687

June 15, 2010

Lamac, Inc.
P.O. BOX 1629
McAllen, TX 78505
Contact: Salvador Gonzalez, Jr.

FAX: 682-6271

ATTENTION: Mr. Gonzalez;

REF: REQUEST FOR INFORMATION - FOR CONTRACT RENEWAL BID 09-152, AWARDS & INCENTIVES

Our original bid specifications provided for an extension of the awarded contract if both parties agreed in writing on the extension and if the unit prices, discounts, terms and conditions remained the same as the cost for contract renewal. If accepted by the Edinburg CISD, the renewal contract will start September 1, 2010 or soon thereafter and end August 31, 2011.

We are interested in knowing whether your company will extend this contract for an additional year. ***If your renewal extension is accepted by the Edinburg CISD, this form will be signed and faxed back to your company to notify you of the renewed contract. The Edinburg CISD reserves the right to accept or reject the renewal of this contract and to bid out a new contract.***

Please call Soledad Schuller, Buyer at 956-289-2311, Ext. 2138 if you have any questions regarding this contract.

YES:_____, per original discounts, terms, and conditions.
Vendor Signature

NO:_____, I am not interested in extending my awarded contract.
Vendor Signature

Approved for Renewal:

_____
Edinburg CISD Date

FAXED

06-16-10P04:11 RCVD

EXHIBIT_____

EDINBURG CONSOLIDATED INDEPENDENT SCHOOL DISTRICT
PURCHASING DEPARTMENT
411 North 8th/DRAWER 990
EDINBURG, TEXAS 78541
PHONE: (956) 289-2311
FAX (956) 383-7687

June 15, 2010

Pamplona Sports
1229 East Hackberry
McAllen, TX 78501
Contact: Benjamin Escobar

Email: EØ7Ø393@aol.com

ATTENTION: Mr. Escobar;

REF: REQUEST FOR INFORMATION - FOR CONTRACT RENEWAL BID 09-152, AWARDS & INCENTIVES

Our original bid specifications provided for an extension of the awarded contract if both parties agreed in writing on the extension and if the unit prices, discounts, terms and conditions remained the same as the cost for contract renewal. If accepted by the Edinburg CISD, the renewal contract will start September 1, 2010 or soon thereafter and end August 31, 2011.

We are interested in knowing whether your company will extend this contract for an additional year. ***If your renewal extension is accepted by the Edinburg CISD, this form will be signed and faxed back to your company to notify you of the renewed contract. The Edinburg CISD reserves the right to accept or reject the renewal of this contract and to bid out a new contract.***

Please call Soledad Schuller, Buyer at 956-289-2311, Ext. 2138 if you have any questions regarding this contract.

YES: _____, per original discounts, terms, and conditions.
Vendor Signature

NO: _____, I am not interested in extending my awarded contract.
Vendor Signature

Approved for Renewal:

_____
Edinburg CISD Date

EMAILED 6/16/10
SA

JB-15-15PU-11

EXHIBIT_____

EDINBURG CONSOLIDATED INDEPENDENT SCHOOL DISTRICT
PURCHASING DEPARTMENT
411 North 8th/DRAWER 990
EDINBURG, TEXAS 78541
PHONE: (956) 289-2311
FAX (956) 383-7667

June 15, 2010

Positive Promotions
15 Gilpin Avenue
Hauppauge, NY 11788
Contact: Steve Carapella

Fax: 877-258-1226

ATTENTION: Mr. Carapella;

REF: REQUEST FOR INFORMATION - FOR CONTRACT RENEWAL BID 09-152, AWARDS & INCENTIVES

Our original bid specifications provided for an extension of the awarded contract if both parties agreed in writing on the extension and if the unit prices, discounts, terms and conditions remained the same as the cost for contract renewal. If accepted by the Edinburg CISD, the renewal contract will start September 1, 2010 or soon thereafter and end August 31, 2011.

We are interested in knowing whether your company will extend this contract for an additional year. ***If your renewal extension is accepted by the Edinburg CISD, this form will be signed and faxed back to your company to notify you of the renewed contract. The Edinburg CISD reserves the right to accept or reject the renewal of this contract and to bid out a new contract.***

Please call Soledad Schuller, Buyer at 956-289-2311, Ext. 2138 if you have any questions regarding this contract.

YES: X _____, per original discounts, terms, and conditions.
Vendor Signature

NO: _____, I am not interested in extending my awarded contract.
Vendor Signature

Approved for Renewal:

_____
Edinburg CISD Date

EXHIBIT_____

EDINBURG CONSOLIDATED INDEPENDENT SCHOOL DISTRICT
PURCHASING DEPARTMENT
411 North 8TH/DRAWER 990
EDINBURG, TEXAS 78541
PHONE: (956) 289-2311
FAX (956) 383-7687

June 15, 2010

Fax: 585-1132

Promo Masters
P.O. BOX 639
Mission, TX 78573
Contact: Edna J. Pena

ATTENTION: Ms. Pena;

REF: REQUEST FOR INFORMATION - FOR CONTRACT RENEWAL
BID 09-152, AWARDS & INCENTIVES

Our original bid specifications provided for an extension of the awarded contract if both parties agreed in writing on the extension and if the unit prices, discounts, terms and conditions remained the same as the cost for contract renewal. If accepted by the Edinburg CISD, the renewal contract will start September 1, 2010 or soon thereafter and end August 31, 2011.

We are interested in knowing whether your company will extend this contract for an additional year. ***If your renewal extension is accepted by the Edinburg CISD, this form will be signed and faxed back to your company to notify you of the renewed contract. The Edinburg CISD reserves the right to accept or reject the renewal of this contract and to bid out a new contract.***

Please call Soledad Schuller, Buyer at 956-289-2311, Ext. 2138 if you have any questions regarding this contract.

YES: Edna J. Peña dba Promo Masters per original discounts, terms, and conditions.
Vendor Signature

NO:_____, I am not interested in extending my awarded contract.
Vendor Signature

Approved for Renewal:

_____
Edinburg CISD Date

EXHIBIT_____

EDINBURG CONSOLIDATED INDEPENDENT SCHOOL DISTRICT
PURCHASING DEPARTMENT
411 North 8th/DRAWER 990
EDINBURG, TEXAS 78541
PHONE: (956) 289-2311
FAX (956) 383-7687

RECEIVED JUN 17 2010

June 15, 2010

Renaissance Learning
2911 Peach Street, P.O. BOX 8036
Wisconsin Rapids, WI54495
Contact: Tracie Grossman/John Powell (#238747)

Fax: 877-280-7642

ATTENTION: Ms. Grossman/Mr. Powell;

REF: REQUEST FOR INFORMATION - FOR CONTRACT RENEWAL
BID 09-152, AWARDS & INCENTIVES

Our original bid specifications provided for an extension of the awarded contract if both parties agreed in writing on the extension and if the unit prices, discounts, terms and conditions remained the same as the cost for contract renewal. If accepted by the Edinburg CISD, the renewal contract will start September 1, 2010 or soon thereafter and end August 31, 2011.

We are interested in knowing whether your company will extend this contract for an additional year. ***If your renewal extension is accepted by the Edinburg CISD, this form will be signed and faxed back to your company to notify you of the renewed contract. The Edinburg CISD reserves the right to accept or reject the renewal of this contract and to bid out a new contract.***

Please call Soledad Schuller, Buyer at 956-289-2311, Ext. 2138 if you have any questions regarding this contract.

YES: Tracie Mann, per original discounts, terms, and conditions.
Vendor Signature Tracie Mann

NO:_____, I am not interested in extending my awarded contract.
Vendor Signature

Approved for Renewal:

_____
Edinburg CISD Date

Please refer to the attached, updated, addendum. Please note that there is no longer a minimum purchase when ordering Accelerated Reader quizzes.

EXHIBIT_____

EDINBURG CONSOLIDATED INDEPENDENT SCHOOL DISTRICT
PURCHASING DEPARTMENT
411 North 8th / DRAWER 990
EDINBURG, TEXAS 78541
PHONE: (956) 289-2311
FAX (956) 383-7687

June 15, 2010

Affinitywear, Inc. * Fax: 380-2282
2608 W. Freddy Gonzalez Dr.
Edinburg, TX 78539
Contact: Laurie O. Ruiz

ATTENTION: Ms. Ruiz;

REF: REQUEST FOR INFORMATION - FOR CONTRACT RENEWAL
BID 09-152, AWARDS & INCENTIVES

Our original bid specifications provided for an extension of the awarded contract if both parties agreed in writing on the extension and if the unit prices, discounts, terms and conditions remained the same as the cost for contract renewal. If accepted by the Edinburg CISD, the renewal contract will start September 1, 2010 or soon thereafter and end August 31, 2011.

We are interested in knowing whether your company will extend this contract for an additional year. ***If your renewal extension is accepted by the Edinburg CISD, this form will be signed and faxed back to your company to notify you of the renewed contract. The Edinburg CISD reserves the right to accept or reject the renewal of this contract and to bid out a new contract.***

Please call Soledad Schuller, Buyer at 956-289-2311, Ext. 2138 if you have any questions regarding this contract.

YES: _____ per original discounts, terms, and conditions.
Vendor Signature

NO: _____, I am not interested in extending my awarded contract.
Vendor Signature

Approved for Renewal:

_____
Edinburg CISD Date

Ruiz? Oliver has changed to
Affinitywear, Inc.
customerservice@affintywear.net
is the new e-mail.

06-16-10P04:11 RCVD

FAXED

EXHIBIT_____

EDINBURG CONSOLIDATED INDEPENDENT SCHOOL DISTRICT
PURCHASING DEPARTMENT
411 North 8th/DRAWER 990
EDINBURG, TEXAS 78541
PHONE: (956) 289-2311
FAX (956) 383-7687

June 15, 2010

Stitches 4 All
1800 South Main Suite 849
McAllen, TX 78503
Contact: Delores Escobar

Fax: 631-3144

ATTENTION: Ms. Escobar;

REF: REQUEST FOR INFORMATION - FOR CONTRACT RENEWAL
BID 09-152, AWARDS & INCENTIVES

Our original bid specifications provided for an extension of the awarded contract if both parties agreed in writing on the extension and if the unit prices, discounts, terms and conditions remained the same as the cost for contract renewal. If accepted by the Edinburg CISD, the renewal contract will start September 1, 2010 or soon thereafter and end August 31, 2011.

We are interested in knowing whether your company will extend this contract for an additional year. ***If your renewal extension is accepted by the Edinburg CISD, this form will be signed and faxed back to your company to notify you of the renewed contract. The Edinburg CISD reserves the right to accept or reject the renewal of this contract and to bid out a new contract.***

Please call Soledad Schuller, Buyer at 956-289-2311, Ext. 2138 if you have any questions regarding this contract.

YES: Delores E. Escobar per original discounts, terms, and conditions.
Vendor Signature

NO:_____, I am not interested in extending my awarded contract.
Vendor Signature

Approved for Renewal:

_____
Edinburg CISD Date

EXHIBIT_____

APPROVAL OF BID 09-171, CROSS-COUNTRY SUPPLIES-FIRST AND FINAL RENEWAL

Superintendent's Recommendation

That the Board of Trustees approve the recommendation to renew the Cross-Country Supplies term bid, which is indicated in the attached renewal letters as being the most favorable and advantageous to the Edinburg CISD.

Rationale

All the supplies and equipment are needed for their respective sports. All sports are treated equally as to the amounts of money budgeted with respect to the numbers of athletes and cost of the individual equipment needed per sport. Gender is of no consequence and is treated equally.

The administration sought competitive sealed bids for the above mentioned bid. Bid opening was held at the Business Office Building on August 17, 2009, at 2:00 P.M. fourteen (14) proposals were received, opened, and read aloud.

Budgetary Information

TOTAL ESTIMATED AWARD RECOMMENDATION: $41,400.00

Account	Description	Appropriations	Encumbrance	Expenditure	Balance
167-36-6399-25-XXX-1XX-000	CROSSCOUN/BOYS	$20,700.00	0.00	0.00	$20,700.00
167-36-6399-26-XXX-1XX-000	CROSS/COUN/GIRLS	$20,700.00	0.00	0.00	$20,700.00
	TOTAL	**$41,400.00**	0.00	**0.00**	**$41,400.00**

Resource Personnel

Dr. René Gutiérrez
Joe Filoteo
Soledad Schuller
Rigoberto V. Abrego
Maria Luisa Guerra
Sylvia D. Garcia
Amaro Tijerina

Board Policy Reference

This is in accordance with the Board Policy CH Purchasing Bidding Requirements.

Prepared by: _____
Joe Filoteo, Athletic Director

Approved by: _____
Maria Luisa Guerra, Asst. Supt. for Instruction & Supports Services

Within Budgetary Allocations: _____
Sylvia Garcia, Director for Finance

Approved by: _____
Rigoberto V. Abrego, Asst. Supt. for Finance/Operations

Recommended by: _____
Dr. René Gutiérrez, Superintendent of Schools

EXHIBIT _____, PAGE(S) _____

Notes for Bid Tabulation
BID 09-171, CROSS-COUNTRY SUPPLIES-RENEWAL
September 14, 2010

1. **USER DEPARTMENT**: This bid was requested by the Athletic Department. Joe Filoteo, Athletic Director and Mario Lopez, Athletic Supervisor for Purchasing & Fields will be present to answer any detailed questions regarding this bid.

2. **TYPE OF BID**: This is a term bid beginning October 1, 2010 and ending September 30, 2011. This will be the last renewal for this contract.

3. **BID EVALUATION**: This bid was evaluated Coach Mario Lopez, Athletic Supervisor of Purchasing & Fields Lopez at the Athletic Department. Final recommendations to the board are done by the Superintendent of Schools.

4. **ORDERING INFORMATION**: The campuses will prepare purchase orders following Board of Trustee bid approval.

5. **UNIT PRICES**: Prices are good for the term of the contract.

6. **APROXIMATE AMOUNT SPENT LAST YEAR: $45,858.00**

7. **TOTAL ESTIMATED AWARD RECOMMENDATION: $41,000.00**

THREE QUOTES REQUIRED: Campuses/departments will be required to get three quotes on orders over $1,000.00. If the vendor is sole source, the campus/department will be required to get a company sole source letter. Forms are available on the Purchasing Website.

VENDOR	DISCOUNT	NOTES
PRIMARY VENDOR **You are required to order from the Primary vendor first. Items not available from the Primary vendor may be ordered from the Approved Vendors below. You will be required to get three quotes on orders over $1,000.00.**		
McAllen Sports 109 South 17th Street McAllen, TX 78501 PH: 956-687-5500 FX: 9856-682-1394	10% Off shelf prices	$50 minimum order, 10% shipping charges, 20% Packing & handling charges, 20% restocking fee

APPROVED VENDORS		
Barcelona Sporting Goods 6702 Luckenbach Ln. Austin, TX 78729 PH: 800-859-2741 Ext. 110 FX: 512-335-7381	0-30%	2009 Nike, Russell, BSG, $100 minimum ordered required, no shipping charges, 15% restocking fee

EXHIBIT_____

APPROVED VENDORS

Bill Guthrie 5701 W. Expressway 83 Harlingen, TX 78552 PH: 956-428-6462 FX: 956-428-7074	10%	2009-2010 Bill Guthrie catalog, $100 minimum order required, no packing & handling charges, 20% restocking fee
Flaghouse, Inc. 601 Flaghouse Drive Hasbrouck Heights, NJ 07604 PH: 800-793-7900 FX: 800-793-7922	10%	Make sure to put this D#16GBTRAB on all your purchase orders, 2009 Fall/Winter, $100 minimum order requirement, restocking on some items
Greg Larson Sports P.O. BOX 567 Brainerd, MN 56401 PH: 800-950-3320 FX: 800-950-9301	0%	Use ID#43EDØ42 when placing your order for proper discounts, 2009 GL Sports, minimum order requirement $50, shipping will be added to invoices, no packing & handling charges, restocking fee's apply
GTM Sportswear 520 McCall Road Manhattan, KS 66502 PH: 800-336-4486 FX: 877-639-9639	0%	2009 Fall Catalog, no minimum order requirement, free shipping on orders of $200 or more, packing & handling charges are $5 for 0-$200, no restocking fee's
Leslie G. 6511 Mona Vista Drive Houston, TX 77083 PH: 281-933-1749 FX: 281-933-3231	75%	Order 12 alike unless fill-ins as a minimum order required, shipping charges will be added to invoice or included in your quote, restocking fee's not applicable, no packing & handling charges, all goods custom made
MF Athletic Co., LLC 11 Amflex Drive Cranston, RI 02921 PH: 800-556-7464 FX: 800-682-6950	10%	2009-10 Everything Track & Field, shipping charges based on weight, no packing & handling charges, no restocking fee's
Sportime, LLC 3155 Northwoods Pkwy Norcross, GA 30071 PH: 800-523-8176 FX: 800-333-0712	0-15% Off Catalog	Use catatlog bid #74665 on all orders to get proper discount, 2009 Sportime, with exceptions, no minimum order required, FOB overnight and second day charge accrued, no packing & handling charges, no restocking fee's
Sport Supply dba/BSN P.O. BOX 7726 Dallas, TX 75209 PH: 800-527-7510 X7324 FX: 972-484-5749	10% With exceptions	When ordering use #09-38391 & C#1025862, 2009 BSN Sports Catalog, $25 minimum order required, no shipping charges, no packing & handling charges, 20-25% restocking fee's apply

EXHIBIT_____

APPROVED VENDORS		
Team Sports of Texas 107 W. 3RD ST Victoria, TX 77902 PH: 800-242-0151 FX: 361-575-8219	10%	2009 Team Sports, no minimum order required, no restocking fee's, no packing & handling charges
US Games P.O. Box 7726 Dallas, TX 75209 PH: 800-327-0484 X7324 FX: 800-365-7653	10% With exceptions	Use Bid #09-38388 on all your purchase orders for proper discounts, 2009 USGames Fall Catalog, $25 minimum order requirement, 17% shipping charges apply, no packing & handling charges, 20% restocking fee's apply
Top Sox 6511 Mona Vista Drive Houston, TX 77083 PH: 281-933-1749 FX: 281-933-3231	0%	Minimum order is if custom 36 pr., if stock 24 pr, shipping charges will be added to invoice, packing & handling charges will be included in invoice, no restocking fee's
Woody's Sporting Goods 202 Industrial Way La Feria, TX 78559 PH: 956-797-5002 FX: 956-797-5011	25%	09-10 Various Catalogs, $100 minimum order required, add 15% shipping, no packing & handling charges, no restocking fee's

9. **BID EVALUATION NOTES**:
   A - Award recommendation to lowest overall and most advantageous bidder.

**Please note that Woody's Sporting Goods was purchased by Barcelona Sporting Goods, and will be representing the Rio Grande Valley Division, beginning January 1, 2010, and the letters of renewal will be from Barcelona Sporting Goods.

EXHIBIT_____

EDINBURG CONSOLIDATED INDEPENDENT SCHOOL DISTRICT
PURCHASING DEPARTMENT
411 North 8th/DRAWER 990
EDINBURG, TEXAS 78541
PHONE: (956) 289-2311
FAX (956) 383-7687

August 2, 2010

McAllen Sports
109 South 17th Street
McAllen, TX 78501
CONTACT: Joe Escamilla

Fax: 956-682-1394

Dear Mr. Escamilla;

REF: REQUEST FOR INFORMATION - FOR CONTRACT RENEWAL
BID 09-171, CROSS-COUNTRY SUPPLIES

Our original bid specifications provided for an extension of the awarded contract if both parties agreed in writing on the extension and if the unit prices, discounts, terms and conditions remained the same as the cost for contract renewal. If accepted by the Edinburg CISD, the renewal contract will start October 1, 2010 or soon thereafter and end September 30, 2011.

We are interested in knowing whether your company will extend this contract for an additional year. ***If your renewal extension is accepted by the Edinburg CISD, this form will be signed and faxed back to your company to notify you of the renewed contract. The Edinburg CISD reserves the right to accept or reject the renewal of this contract and to bid out a new contract.***

Please call Soledad Schuller, Buyer at 956-289-2311, Ext. 2138 if you have any questions regarding this contract.

YES: _____, per original discounts, terms, and conditions.
Vendor Signature

NO: _____, I am not interested in extending my awarded contract.
Vendor Signature

Approved for Renewal:

_____
Edinburg CISD Date

EXHIBIT_____

EDINBURG CONSOLIDATED INDEPENDENT SCHOOL DISTRICT
PURCHASING DEPARTMENT
411 North 8th / DRAWER 990
EDINBURG, TEXAS 78541
PHONE: (956) 289-2311
FAX (956) 383-7687

August 2, 2010

Barcelona Sporting Goods
6702 Luckenbach Ln.
Austin, TX 78729
ATTN: Tommy Stallworth

Fax: 512-335-7381
Fax: 956-797-5011

Dear Mr. Stallworth;

REF: REQUEST FOR INFORMATION - FOR CONTRACT RENEWAL
BID 09-171, CROSS-COUNTRY SUPPLIES

Our original bid specifications provided for an extension of the awarded contract if both parties agreed in writing on the extension and if the unit prices, discounts, terms and conditions remained the same as the cost for contract renewal. If accepted by the Edinburg CISD, the renewal contract will start October 1, 2010 or soon thereafter and end September 30, 2011.

We are interested in knowing whether your company will extend this contract for an additional year. ***If your renewal extension is accepted by the Edinburg CISD, this form will be signed and faxed back to your company to notify you of the renewed contract. The Edinburg CISD reserves the right to accept or reject the renewal of this contract and to bid out a new contract.***

Please call Soledad Schuller, Buyer at 956-289-2311, Ext. 2138 if you have any questions regarding this contract.

YES: _____, per original discounts, terms, and conditions.
Vendor Signature

NO: _____, I am not interested in extending my awarded contract.
Vendor Signature

Approved for Renewal:

_____
Edinburg CISD Date

EXHIBIT_____

EDINBURG CONSOLIDATED INDEPENDENT SCHOOL DISTRICT
PURCHASING DEPARTMENT
411 North 8th/DRAWER 990
EDINBURG, TEXAS 78541
PHONE: (956) 289-2311
FAX (956) 383-7687

August 2, 2010

Bill Guthrie
5701 W. Expressway 83
Harlingen, TX 78552
CONTACT: William J. Guthrie

Fax: 956-428-7074

Dear Mr. Guthrie;

REF: REQUEST FOR INFORMATION - FOR CONTRACT RENEWAL
BID 09-171, CROSS-COUNTRY SUPPLIES

Our original bid specifications provided for an extension of the awarded contract if both parties agreed in writing on the extension and if the unit prices, discounts, terms and conditions remained the same as the cost for contract renewal. If accepted by the Edinburg CISD, the renewal contract will start October 1, 2010 or soon thereafter and end September 30, 2011.

We are interested in knowing whether your company will extend this contract for an additional year. ***If your renewal extension is accepted by the Edinburg CISD, this form will be signed and faxed back to your company to notify you of the renewed contract. The Edinburg CISD reserves the right to accept or reject the renewal of this contract and to bid out a new contract.***

Please call Soledad Schuller, Buyer at 956-289-2311, Ext. 2138 if you have any questions regarding this contract.

YES: William J. Guthrie, per original discounts, terms, and conditions.
Vendor Signature

NO:_____, I am not interested in extending my awarded contract.
Vendor Signature

Approved for Renewal:

_____
Edinburg CISD Date

EXHIBIT_____

EDINBURG CONSOLIDATED INDEPENDENT SCHOOL DISTRICT
PURCHASING DEPARTMENT
411 North 8th/DRAWER 990
EDINBURG, TEXAS 78541
PHONE: (956) 289-2311
FAX (956) 383-7687

August 2, 2010

Flaghouse, Inc.
601 Flaghouse Drive
Hasorouck Heights, NJ 07604
CONTACT: Tennille Dudley

Fax: 800-793-7922

Dear Mr. Dudley;

REF: REQUEST FOR INFORMATION - FOR CONTRACT RENEWAL
BID 09-171, CROSS-COUNTRY SUPPLIES

Our original bid specifications provided for an extension of the awarded contract if both parties agreed in writing on the extension and if the unit prices, discounts, terms and conditions remained the same as the cost for contract renewal. If accepted by the Edinburg CISD, the renewal contract will start October 1, 2010 or soon thereafter and end September 30, 2011.

We are interested in knowing whether your company will extend this contract for an additional year. ***If your renewal extension is accepted by the Edinburg CISD, this form will be signed and faxed back to your company to notify you of the renewed contract. The Edinburg CISD reserves the right to accept or reject the renewal of this contract and to bid out a new contract.***

Please call Soledad Schuller, Buyer at 956-289-2311, Ext. 2138 if you have any questions regarding this contract.

YES: _____, per original discounts, terms, and conditions.
Vendor Signature

NO _____, I am not interested in extending my awarded contract.
Vendor Signature

Approved for Renewal:

_____
Edinburg CISD Date

EXHIBIT_____

EDINBURG CONSOLIDATED INDEPENDENT SCHOOL DISTRICT
PURCHASING DEPARTMENT
411 North 8th/DRAWER 990
EDINBURG, TEXAS 78541
PHONE: (956) 289-2311
FAX (956) 383-7687

GREG LARSON SPORTS, INC.
PO Box 567
Brainerd, MN 56401
PH 800 950-3320
FAX 800 950-9301

August 2, 2010

Fax: 800-950-9301

Greg Larson Sports
P.O. BOX 567
Brainerd, MN 56401
CONTACT: Scott Sabyan

Dear Mr. Sabyan;

REF: REQUEST FOR INFORMATION - FOR CONTRACT RENEWAL
BID 09-171, CROSS-COUNTRY SUPPLIES

Our original bid specifications provided for an extension of the awarded contract if both parties agreed in writing on the extension and if the unit prices, discounts, terms and conditions remained the same as the cost for contract renewal. If accepted by the Edinburg CISD, the renewal contract will start October 1, 2010 or soon thereafter and end September 30, 2011.

We are interested in knowing whether your company will extend this contract for an additional year. ***If your renewal extension is accepted by the Edinburg CISD, this form will be signed and faxed back to your company to notify you of the renewed contract. The Edinburg CISD reserves the right to accept or reject the renewal of this contract and to bid out a new contract.***

Please call Soledad Schuller, Buyer at 956-289-2311, Ext. 2138 if you have any questions regarding this contract.

HARVEY ROTHENBERG, VP

8/3/2010 YES: Harvey Rothenberg, per original discounts, terms, and conditions. (PER FALL 2010 CATALOG)
Vendor Signature

NO:_____, I am not interested in extending my awarded contract.
Vendor Signature

Approved for Renewal:

_____
Edinburg CISD Date

EXHIBIT_____

EDINBURG CONSOLIDATED INDEPENDENT SCHOOL DISTRICT
PURCHASING DEPARTMENT
411 North 8th/DRAWER 990
EDINBURG, TEXAS 78541
PHONE: (956) 289-2311
FAX (956) 383-7687

August 17, 2010

GTM Sportswear
520 McCall Road
Manhattan, KS 66502
CONTACT: Jessica Hess

Fax: 877-558-6511

Dear Ms. Hess;

REF: REQUEST FOR INFORMATION - FOR CONTRACT RENEWAL BID 09-171, CROSS-COUNTRY SUPPLIES

Our original bid specifications provided for an extension of the awarded contract if both parties agreed in writing on the extension and if the unit prices, discounts, terms and conditions remained the same as the cost for contract renewal. If accepted by the Edinburg CISD, the renewal contract will start October 1, 2010 or soon thereafter and end September 30, 2011.

We are interested in knowing whether your company will extend this contract for an additional year. ***If your renewal extension is accepted by the Edinburg CISD, this form will be signed and faxed back to your company to notify you of the renewed contract. The Edinburg CISD reserves the right to accept or reject the renewal of this contract and to bid out a new contract.***

Please call Soledad Schuller, Buyer at 956-289-2311, Ext. 2138 if you have any questions regarding this contract.

YES: X _____, per original discounts, terms, and conditions.
Vendor Signature

NO: _____, I am not interested in extending my awarded contract.
Vendor Signature

Approved for Renewal:

_____
Edinburg CISD Date

January 18, 2010

EXHIBIT_____

EDINBURG CONSOLIDATED INDEPENDENT SCHOOL DISTRICT
PURCHASING DEPARTMENT
411 North 8th/DRAWER 990
EDINBURG, TEXAS 78541
PHONE: (956) 289-2311
FAX (956) 383-7687

August 2, 2010

Leslie G.
6511 Mona Vista Drive
Houston, TX 77083
CONTACT: Leslie G. Meltzer

Fax: 281-933-3231

Dear Mrs. Meltzer;

REF: REQUEST FOR INFORMATION - FOR CONTRACT RENEWAL
BID 09-171, CROSS-COUNTRY SUPPLIES

Our original bid specifications provided for an extension of the awarded contract if both parties agreed in writing on the extension and if the unit prices, discounts, terms and conditions remained the same as the cost for contract renewal. If accepted by the Edinburg CISD, the renewal contract will start October 1, 2010 or soon thereafter and end September 30, 2011.

We are interested in knowing whether your company will extend this contract for an additional year. ***If your renewal extension is accepted by the Edinburg CISD, this form will be signed and faxed back to your company to notify you of the renewed contract. The Edinburg CISD reserves the right to accept or reject the renewal of this contract and to bid out a new contract.***

Please call Soledad Schuller, Buyer at 956-289-2311, Ext. 2138 if you have any questions regarding this contract.

YES: Leslie G. Meltzer, per original discounts, terms, and conditions.
Vendor Signature

NO:_____, I am not interested in extending my awarded contract.
Vendor Signature

Approved for Renewal:

_____
Edinburg CISD Date

EXHIBIT_____

EDINBURG CONSOLIDATED INDEPENDENT SCHOOL DISTRICT
PURCHASING DEPARTMENT
411 North 8th/DRAWER 990
EDINBURG, TEXAS 78541
PHONE: (956) 289-2311
FAX (956) 381-7687

August 2, 2010

MF Athletic Co., LLC
11 Amflex Drive
Cranston, RI 02921
CONTACT: Jen Lachapelle

Fax: 800-682-6950

Dear Mr. Lachapelle;

REF: REQUEST FOR INFORMATION - FOR CONTRACT RENEWAL
BID 09-171, CROSS-COUNTRY SUPPLIES

Our original bid specifications provided for an extension of the awarded contract if both parties agreed in writing on the extension and if the unit prices, discounts, terms and conditions remained the same as the cost for contract renewal. If accepted by the Edinburg CISD, the renewal contract will start October 1, 2010 or soon thereafter and end September 30, 2011.

We are interested in knowing whether your company will extend this contract for an additional year. ***If your renewal extension is accepted by the Edinburg CISD, this form will be signed and faxed back to your company to notify you of the renewed contract. The Edinburg CISD reserves the right to accept or reject the renewal of this contract and to bid out a new contract.***

Please call Soledad Schuller, Buyer at 956-289-2311, Ext. 2138 if you have any questions regarding this contract.

YES: Jen Lachapelle, per original discounts, terms, and conditions.
Vendor Signature

NO:_____, I am not interested in extending my awarded contract.
Vendor Signature

Approved for Renewal:

_____
Edinburg CISD Date

EXHIBIT_____

EDINBURG CONSOLIDATED INDEPENDENT SCHOOL DISTRICT
PURCHASING DEPARTMENT
411 North 8th/DRAWER 990
EDINBURG, TEXAS 78541
PHONE: (956) 289-2311
FAX (956) 383-7687

August 2, 2010

Sportime, LLC
3155 Northwoods Parkway
Norcross, GA 30071
CONTACT: Sean Bevan

Fax: 800-333-0712

Dear Mr. Bevan;

REF: REQUEST FOR INFORMATION - FOR CONTRACT RENEWAL
BID 09-171, CROSS-COUNTRY SUPPLIES

Our original bid specifications provided for an extension of the awarded contract if both parties agreed in writing on the extension and if the unit prices, discounts, terms and conditions remained the same as the cost for contract renewal. If accepted by the Edinburg CISD, the renewal contract will start October 1, 2010 or soon thereafter and end September 30, 2011.

We are interested in knowing whether your company will extend this contract for an additional year. ***If your renewal extension is accepted by the Edinburg CISD, this form will be signed and faxed back to your company to notify you of the renewed contract. The Edinburg CISD reserves the right to accept or reject the renewal of this contract and to bid out a new contract.***

Please call Soledad Schuller, Buyer at 956-289-2311, Ext. 2138 if you have any questions regarding this contract.

Please see attached for changes.

YES: _____, per original discounts, terms, and conditions.
Vendor Signature

NO: _____, I am not interested in extending my awarded contract.
Vendor Signature

Approved for Renewal:

_____
Edinburg CISD Date

EXHIBIT_____

EDINBURG CONSOLIDATED INDEPENDENT SCHOOL DISTRICT
PURCHASING DEPARTMENT
411 North 8th/DRAWER 990
EDINBURG, TEXAS 78541
PHONE: (956) 289-2311
FAX (956) 383-7687

C9
38391

August 2, 2010

Sport Supply dba/BSN
P.O. BOX 7726
Dallas, TX 75209
CONTACT: John Stafford

Fax: 972-484-5749

Dear Mr. Stafford;

REF: REQUEST FOR INFORMATION - FOR CONTRACT RENEWAL
BID 09-171, CROSS-COUNTRY SUPPLIES

Our original bid specifications provided for an extension of the awarded contract if both parties agreed in writing on the extension and if the unit prices, discounts, terms and conditions remained the same as the cost for contract renewal. If accepted by the Edinburg CISD, the renewal contract will start October 1, 2010 or soon thereafter and end September 30, 2011.

We are interested in knowing whether your company will extend this contract for an additional year. ***If your renewal extension is accepted by the Edinburg CISD, this form will be signed and faxed back to your company to notify you of the renewed contract. The Edinburg CISD reserves the right to accept or reject the renewal of this contract and to bid out a new contract.***

Please call Soledad Schuller, Buyer at 956-289-2311, Ext. 2138 if you have any questions regarding this contract.

JOHN STAFFORD
Bid Specialist
I've enclosed our latest exception list.

YES: John Stafford: ...s.stafford@sportsup per original discounts, terms, and conditions.
Vendor Signature

NO:_____, I am not interested in extending my awarded contract.
Vendor Signature

Approved for Renewal:

_____
Edinburg CISD Date

Sport Supply Group, Inc.
dba BSN Sports/Collegiate Pacific
PO Box 7726
Dallas, TX 75209

EXHIBIT_____

EDINBURG CONSOLIDATED INDEPENDENT SCHOOL DISTRICT
PURCHASING DEPARTMENT
411 North 8th/DRAWER 990
EDINBURG, TEXAS 78541
PHONE: (956) 289-2311
FAX (956) 383-7687

August 2, 2010

Team Sports of Texas
107 W. 3rd Street
Victoria, TX 77902
CONTACT: Lupe Najera

Fax: 361-575-8219

Dear Mr. Najera;

REF: REQUEST FOR INFORMATION - FOR CONTRACT RENEWAL
BID 09-171, CROSS-COUNTRY SUPPLIES

Our original bid specifications provided for an extension of the awarded contract if both parties agreed in writing on the extension and if the unit prices, discounts, terms and conditions remained the same as the cost for contract renewal. If accepted by the Edinburg CISD, the renewal contract will start October 1, 2010 or soon thereafter and end September 30, 2011.

We are interested in knowing whether your company will extend this contract for an additional year. ***If your renewal extension is accepted by the Edinburg CISD, this form will be signed and faxed back to your company to notify you of the renewed contract. The Edinburg CISD reserves the right to accept or reject the renewal of this contract and to bid out a new contract.***

Please call Soledad Schuller, Buyer at 956-289-2311, Ext. 2138 if you have any questions regarding this contract.

YES:_____, per original discounts, terms, and conditions.
Vendor Signature

NO:_____, I am not interested in extending my awarded contract.
Vendor Signature

Approved for Renewal:

_____
Edinburg CISD Date

EXHIBIT_____

EDINBURG CONSOLIDATED INDEPENDENT SCHOOL DISTRICT
PURCHASING DEPARTMENT
411 North 8th/DRAWER 990
EDINBURG, TEXAS 78541
PHONE: (956) 289-2311
FAX (956) 383-7687

C4
38388

August 2, 2010

U.S. Games
P.O. BOX 7726
Dallas, Texas 75209
CONTACT: Chris Bloomfield

Fax: 800-365-7653

Dear Mr. Bloomfield;

REF: REQUEST FOR INFORMATION - FOR CONTRACT RENEWAL
BID 09-171, CROSS-COUNTRY SUPPLIES

Our original bid specifications provided for an extension of the awarded contract if both parties agreed in writing on the extension and if the unit prices, discounts, terms and conditions remained the same as the cost for contract renewal. If accepted by the Edinburg CISD, the renewal contract will start October 1, 2010 or soon thereafter and end September 30, 2011.

We are interested in knowing whether your company will extend this contract for an additional year. ***If your renewal extension is accepted by the Edinburg CISD, this form will be signed and faxed back to your company to notify you of the renewed contract. The Edinburg CISD reserves the right to accept or reject the renewal of this contract and to bid out a new contract.***

Please call Soledad Schuller, Buyer at 956-289-2311, Ext. 2138 if you have any questions regarding this contract.

CHRIS BLOOMFIELD
BID DIRECTOR

YES:_____, per original discounts, terms, and conditions.
Vendor Signature

NO:_____, I am not interested in extending my awarded contract.
Vendor Signature

Approved for Renewal:

_____
Edinburg CISD Date

EXHIBIT_____

EDINBURG CONSOLIDATED INDEPENDENT SCHOOL DISTRICT
PURCHASING DEPARTMENT
411 North 8th/DRAWER 990
EDINBURG, TEXAS 78541
PHONE: (956) 289-2311
FAX (956) 383-7687

August 2, 2010

Top Sox
6511 Mona Vista Drive
Houston, TX 77083
CONTACT: Leslie G. Meitzer

Fax: 281-933-3231

Dear Mrs. Meitzer;

REF: REQUEST FOR INFORMATION - FOR CONTRACT RENEWAL
BID 09-171, CROSS-COUNTRY SUPPLIES

Our original bid specifications provided for an extension of the awarded contract if both parties agreed in writing on the extension and if the unit prices, discounts, terms and conditions remained the same as the cost for contract renewal. If accepted by the Edinburg CISD, the renewal contract will start October 1, 2010 or soon thereafter and end September 30, 2011.

We are interested in knowing whether your company will extend this contract for an additional year. ***If your renewal extension is accepted by the Edinburg CISD, this form will be signed and faxed back to your company to notify you of the renewed contract. The Edinburg CISD reserves the right to accept or reject the renewal of this contract and to bid out a new contract.***

Please call Soledad Schuller, Buyer at 956-289-2311, Ext. 2138 if you have any questions regarding this contract.

YES: _____ per original discounts, terms, and conditions.
Vendor Signature

NO: _____ I am not interested in extending my awarded contract.
Vendor Signature

Approved for Renewal:

_____
Edinburg CISD Date

EXHIBIT_____

APPROVAL OF BID 09-172, TENNIS SUPPLIES-FIRST AND FINAL RENEWAL

Superintendent's Recommendation

That the Board of Trustees approve the recommendation to renew the Tennis Supplies term bid, which is indicated in the attached renewal forms as being the most favorable and advantageous to the Edinburg CISD.

Rationale

All the supplies and equipment are needed for their respective sports. All sports are treated equally as to the amounts of money budgeted with respect to the numbers of athletes and cost of the individual equipment needed per sport. Gender is of no consequence and is treated equally.

The administration sought competitive sealed bids for the above mentioned bid. Bid opening was held at the Business Office Building on August 17, 2009, at 2:30 P.M. twelve (12) proposals were received, opened, and read aloud.

Budgetary Information

TOTAL ESTIMATED AWARD RECOMMENDATION: **$26,000.00**

Account	Description	Appropriations	Encumbrance	Expenditure	Balance
167-36-6399-88-XXX-1XX-000	SUPPLIES/TENNIS	33,750.00	0	0	33,750.00
	TOTAL	**33,750.00**	**0**	**0**	**33,750.00**

Resource Personnel

Dr. René Gutiérrez
Joe Filoteo
Soledad Schuller
Rigoberto V. Abrego
Maria Luisa Guerra
Sylvia D. Garcia
Amaro Tijerina

Board Policy Reference

This is in accordance with the Board Policy CH Purchasing Bidding Requirements.

Prepared by: _____
Joe Filoteo, Athletic Director

Approved by: _____
Maria Luisa Guerra, Asst. Supt. for Instruction & Supports Services

Within Budgetary Allocations: _____
Sylvia Garcia, Director for Finance

Approved by: _____
Rigoberto V. Abrego, Asst. Supt. for Finance/Operations

Recommended by: _____
Dr. René Gutiérrez, Superintendent of Schools

EXHIBIT _____, PAGE(S) _____

08-30-10 A10:39 RCVD

Notes for Bid Tabulation
BID 09-172, TENNIS SUPPLIES-RENEWAL
September 14, 2010

1. **USER DEPARTMENT**: This bid was requested by the Athletic Department. Joe Filoteo, Athletic Director and Mario Lopez, Athletic Supervisor for Purchasing & Fields will be present to answer any detailed questions regarding this bid.

2. **TYPE OF BID**: This is a term bid beginning October 1, 2010 and ending August 31, 2011. This will be the last renewal for this contract.

3. **BID EVALUATION**: This bid was evaluated Coach Mario Lopez, Athletic Supervisor of Purchasing & Fields Lopez at the Athletic Department. Final recommendations to the board are done by the Superintendent of Schools.

4. **ORDERING INFORMATION**: The campuses will prepare purchase orders following Board of Trustee bid approval.

5. **UNIT PRICES**: Prices are good for the term of the contract.

6. **APROXIMATE AMOUNT SPENT LAST YEAR:** **$28,000.00**

7. **TOTAL ESTIMATED AWARD RECOMMENDATION:** **$26,000.00**

THREE QUOTES REQUIRED: Campuses/departments will be required to get three quotes on orders over $1,000.00. If the vendor is sole source, the campus/department will be required to get a company sole source letter. Forms are available on the Purchasing Website.

VENDOR	DISCOUNT	NOTES
PRIMARY VENDOR **You are required to order from the Primary vendor first. Items not available from the Primary vendor may be ordered from the Approved Vendors below. You will be required to get three quotes on orders over $1,000.00.**		
White Line Sports 2330 N. 10th Street McAllen, Texas 78501 PH: 956-631-9081 FX: 956-631-9489 www.wltennis.com	0%	No Minimum order required, shipping charges will be 5%, no packing & handling charges, no restocking fee,

APPROVED VENDORS		
Bill Guthrie 5701 W. Expressway 83 Harlingen, TX 78552 PH: 956-428-6462 FX: 956-428-7074	10%	2010 Bill Guthrie catalog, minimum order of $100, no packing & handling charges, 20% restocking fee, shipping only on large objects.
Clarke Distributing 9233 Bryant St. Houston, TX 77075 PH: 800-777-3444 FX: 713-944-7980 www.tennis-sports.com	0%	Wholesale pricing, no minimum order required, FOB Houston, UPS standard ground charges, yes 15% restocking fee, no packing & handling charges, 5-10 business days ARO,

EXHIBIT_____

APPROVED VENDORS		
U.S. Games P.O. BOX 7726 Dallas, TX 75209 PH: 800-327-0484 X-7327 FX: 800-365-7653	10% With Exceptions	**USE BID #09-38389**, Minimum order of $25, 17% shipping charges if you do not have the minimum order. No packing or handling charges, 20% restocking fee's apply.
Woody's Sporting Goods 202 Industrial Way La Feria, TX 78559 PH: 956-797-5002 FX: 956-797-5011	25%	2008 Cobra Sports catalogs, minimum order required $100, no shipping charges no packing & handling charges, restocking fee 25%

9. **BID EVALUATION NOTES**:
   A - Award recommendation to lowest overall and most advantageous bidder.

**Please note that Woody's Sporting Goods was purchased by Barcelona Sporting Goods, and will be representing the Rio Grande Valley Division, beginning January 1, 2010, and the letters of renewal will be from Barcelona Sporting Goods.

EXHIBIT_____

EDINBURG CONSOLIDATED INDEPENDENT SCHOOL DISTRICT
PURCHASING DEPARTMENT
411 North 8th/DRAWER 990
EDINBURG, TEXAS 78541
PHONE: (956) 289-2311
FAX (956) 383-7687

August 5, 2010

White Line Sports
2330 N. 10th Street
McAllen, TX 78501
Contact: ~~Alex Gonzalez~~ Juan Garcia

FAX: 956-631-9489

Dear Mr. Gonzalez;

REF: REQUEST FOR INFORMATION - FOR CONTRACT RENEWAL
BID 09-172, TENNIS SUPPLIES

Our original bid specifications provided for an extension of the awarded contract if both parties agreed in writing on the extension and if the unit prices, discounts, terms and conditions remained the same as the cost for contract renewal. If accepted by the Edinburg CISD, the renewal contract will start October 1, 2010 through September 30, 2011.

We are interested in knowing whether your company will extend this contract for an additional year. ***If your renewal extension is accepted by the Edinburg CISD, this form will be signed and faxed back to your company to notify you of the renewed contract. The Edinburg CISD reserves the right to accept or reject the renewal of this contract and to bid out a new contract.***

Please call Soledad Schuller, Buyer at 956-289-2311, Ext. 2138 if you have any questions regarding this contract.

YES: Juan Garcia 8/13/10, per original discounts, terms, and conditions.
Vendor Signature

NO:_____, I am not interested in extending my awarded contract.
Vendor Signature

Approved for Renewal:

_____
Edinburg CISD Date

FAXED

08-05-10P02:04

EXHIBIT_____

EDINBURG CONSOLIDATED INDEPENDENT SCHOOL DISTRICT
PURCHASING DEPARTMENT
411 North 8th/DRAWER 990
EDINBURG, TEXAS 78541
PHONE: (956) 289-2311
FAX (956) 383-7687

August 5, 2010

Bill Guthrie Sports, Inc.
5701 W. Expressway 83
Harlingen, TX 78552
Contact: William J. Guthrie

FAX: 956-428-7074

Dear Mr. Guthrie;

REF: REQUEST FOR INFORMATION - FOR CONTRACT RENEWAL
BID 09-172, TENNIS SUPPLIES

Our original bid specifications provided for an extension of the awarded contract if both parties agreed in writing on the extension and if the unit prices, discounts, terms and conditions remained the same as the cost for contract renewal. If accepted by the Edinburg CISD, the renewal contract will start October 1, 2010 through September 30, 2011.

We are interested in knowing whether your company will extend this contract for an additional year. ***If your renewal extension is accepted by the Edinburg CISD, this form will be signed and faxed back to your company to notify you of the renewed contract. The Edinburg CISD reserves the right to accept or reject the renewal of this contract and to bid out a new contract.***

Please call Soledad Schuller, Buyer at 956-289-2311, Ext. 2138 if you have any questions regarding this contract.

YES: William J Guthrie, per original discounts, terms, and conditions.
Vendor Signature

NO:_____, I am not interested in extending my awarded contract.
Vendor Signature

Approved for Renewal:

_____
Edinburg CISD Date

FAXED

08-05-10P02:04

EXHIBIT_____

EDINBURG CONSOLIDATED INDEPENDENT SCHOOL DISTRICT
PURCHASING DEPARTMENT
411 North 8th/DRAWER 990
EDINBURG, TEXAS 78541
PHONE: (956) 289-2311
FAX (956) 383-7687

August 5, 2010

Clarke Distributing Co.
9233 Bryant St.
Houston, TX 77075
Contact: Don Clarke

FAX: 713-944-7980

Dear Mr. Clarke;

REF: REQUEST FOR INFORMATION - FOR CONTRACT RENEWAL
BID 09-172, TENNIS SUPPLIES

Our original bid specifications provided for an extension of the awarded contract if both parties agreed in writing on the extension and if the unit prices, discounts, terms and conditions remained the same as the cost for contract renewal. If accepted by the Edinburg CISD, the renewal contract will start October 1, 2010 through September 30, 2011.

We are interested in knowing whether your company will extend this contract for an additional year. ***If your renewal extension is accepted by the Edinburg CISD, this form will be signed and faxed back to your company to notify you of the renewed contract. The Edinburg CISD reserves the right to accept or reject the renewal of this contract and to bid out a new contract.***

Please call Soledad Schuller, Buyer at 956-289-2311, Ext. 2138 if you have any questions regarding this contract.

YES: Don Clarke, per original discounts, terms, and conditions.
Vendor Signature

NO: _____, I am not interested in extending my awarded contract.
Vendor Signature

Approved for Renewal:

_____
Edinburg CISD Date

EXHIBIT_____

EDINBURG CONSOLIDATED INDEPENDENT SCHOOL DISTRICT
PURCHASING DEPARTMENT
411 North 8th/DRAWER 990
EDINBURG, TEXAS 78541
PHONE: (956) 289-2311
FAX (956) 383-7687

August 13, 2010

FAX: 800-734-2193

Flaghouse Inc.
601 Flaghouse Drive
Hasbrouck Heights, NJ 07604
Contact: Andy

Dear BID DEPARTMENT;

REF: REQUEST FOR INFORMATION - FOR CONTRACT RENEWAL
BID 09-172, TENNIS SUPPLIES

Our original bid specifications provided for an extension of the awarded contract if both parties agreed in writing on the extension and if the unit prices, discounts, terms and conditions remained the same as the cost for contract renewal. If accepted by the Edinburg CISD, the renewal contract will start October 1, 2010 through September 30, 2011.

We are interested in knowing whether your company will extend this contract for an additional year. ***If your renewal extension is accepted by the Edinburg CISD, this form will be signed and faxed back to your company to notify you of the renewed contract. The Edinburg CISD reserves the right to accept or reject the renewal of this contract and to bid out a new contract.***

Please call Soledad Schuller, Buyer at 956-289-2311, Ext. 2138 if you have any questions regarding this contract.

Please put Flaghouse bid number 160BTRAB on all purchase orders against this bid. Thank you.

YES:_____, per original discounts, terms, and conditions.
Vendor Signature

NO:_____, I am not interested in extending my awarded contract.
Vendor Signature

Approved for Renewal:

_____
Edinburg CISD Date

EXHIBIT_____

EDINBURG CONSOLIDATED INDEPENDENT SCHOOL DISTRICT
PURCHASING DEPARTMENT
411 North 8th/DRAWER 990
EDINBURG, TEXAS 78541
PHONE: (956) 289-2311
FAX (956) 383-7687

August 5, 2010

GL Sports
P.O. BOX 567
BRAINERD, MN 56401
Contact: Scott Sabyan

FAX: 800-950-9301

Dear Mr. Sabyan;

REF: REQUEST FOR INFORMATION - FOR CONTRACT RENEWAL
BID 09-172, TENNIS SUPPLIES

Our original bid specifications provided for an extension of the awarded contract if both parties agreed in writing on the extension and if the unit prices, discounts, terms and conditions remained the same as the cost for contract renewal. If accepted by the Edinburg CISD, the renewal contract will start October 1, 2010 through September 30, 2011.

We are interested in knowing whether your company will extend this contract for an additional year. ***If your renewal extension is accepted by the Edinburg CISD, this form will be signed and faxed back to your company to notify you of the renewed contract. The Edinburg CISD reserves the right to accept or reject the renewal of this contract and to bid out a new contract.***

Please call Soledad Schuller, Buyer at 956-289-2311, Ext. 2138 if you have any questions regarding this contract.

HARVEY ROTHENBERG, VP

YES: Harvey Rothenberg, per original discounts, terms, and conditions. PER FALL 2010 GL CATALOG
Vendor Signature

NO:_____, I am not interested in extending my awarded contract.
Vendor Signature

Approved for Renewal:

_____
Edinburg CISD Date

EXHIBIT_____

EDINBURG CONSOLIDATED INDEPENDENT SCHOOL DISTRICT
PURCHASING DEPARTMENT
411 North 8th/DRAWER 990
EDINBURG, TEXAS 78541
PHONE: (956) 289-2311
FAX (956) 383-7687

August 5, 2010

Leslie G.
6511 Mona Vista Drive
Houston, TX 77083
Contact: Leslie G. Meltzer

FAX: 281-933-3231

Dear Mrs. Meltzer,

REF: REQUEST FOR INFORMATION - FOR CONTRACT RENEWAL
BID 09-172, TENNIS SUPPLIES

Our original bid specifications provided for an extension of the awarded contract if both parties agreed in writing on the extension and if the unit prices, discounts, terms and conditions remained the same as the cost for contract renewal. If accepted by the Edinburg CISD, the renewal contract will start October 1, 2010 through September 30, 2011.

We are interested in knowing whether your company will extend this contract for an additional year. ***If your renewal extension is accepted by the Edinburg CISD, this form will be signed and faxed back to your company to notify you of the renewed contract. The Edinburg CISD reserves the right to accept or reject the renewal of this contract and to bid out a new contract.***

Please call Soledad Schuller, Buyer at 956-289-2311, Ext. 2138 if you have any questions regarding this contract.

YES: Leslie G. Meltzer, per original discounts, terms, and conditions.
Vendor Signature

NO:_____, I am not interested in extending my awarded contract.
Vendor Signature

Approved for Renewal:

_____
Edinburg CISD Date

EXHIBIT_____

EDINBURG CONSOLIDATED INDEPENDENT SCHOOL DISTRICT
PURCHASING DEPARTMENT
411 North 8th/DRAWER 990
EDINBURG, TEXAS 78541
PHONE: (956) 289-2311
FAX (956) 383-7687

August 5, 2010

McAllen Sports
109 South 17th Street
McAllen, TX 78501
Contact: Joe Escamilla

FAX: 956-682-1394

Dear Mr. Escamilla;

REF: REQUEST FOR INFORMATION - FOR CONTRACT RENEWAL
BID 09-172, TENNIS SUPPLIES

Our original bid specifications provided for an extension of the awarded contract if both parties agreed in writing on the extension and if the unit prices, discounts, terms and conditions remained the same as the cost for contract renewal. If accepted by the Edinburg CISD, the renewal contract will start October 1, 2010 through September 30, 2011.

We are interested in knowing whether your company will extend this contract for an additional year. ***If your renewal extension is accepted by the Edinburg CISD, this form will be signed and faxed back to your company to notify you of the renewed contract. The Edinburg CISD reserves the right to accept or reject the renewal of this contract and to bid out a new contract.***

Please call Soledad Schuller, Buyer at 956-289-2311, Ext. 2138 if you have any questions regarding this contract.

YES: _____, per original discounts, terms, and conditions.
Vendor Signature

NO: _____, I am not interested in extending my awarded contract.
Vendor Signature

Approved for Renewal:

_____
Edinburg CISD Date

EXHIBIT_____

EDINBURG CONSOLIDATED INDEPENDENT SCHOOL DISTRICT
PURCHASING DEPARTMENT
411 North 8th/DRAWER 990
EDINBURG, TEXAS 78541
PHONE: (956) 289-2311
FAX (956) 383-7687

August 5, 2010

Sportime, LLC
3155 Northwoods Pkwy
Norcross, GA 30071
Contact: Sean Bevan

FAX: 800-845-1535

Dear Mr. Bevan;

REF: REQUEST FOR INFORMATION - FOR CONTRACT RENEWAL
BID 09-172, TENNIS SUPPLIES

Our original bid specifications provided for an extension of the awarded contract if both parties agreed in writing on the extension and if the unit prices, discounts, terms and conditions remained the same as the cost for contract renewal. If accepted by the Edinburg CISD, the renewal contract will start October 1, 2010 through September 30, 2011.

We are interested in knowing whether your company will extend this contract for an additional year. ***If your renewal extension is accepted by the Edinburg CISD, this form will be signed and faxed back to your company to notify you of the renewed contract. The Edinburg CISD reserves the right to accept or reject the renewal of this contract and to bid out a new contract.***

Please call Soledad Schuller, Buyer at 956-289-2311, Ext. 2138 if you have any questions regarding this contract.

Please see attached for changes.

YES: _____, per original discounts, terms, and conditions.
Vendor Signature

NO: _____, I am not interested in extending my awarded contract.
Vendor Signature

Approved for Renewal:

_____
Edinburg CISD Date

EXHIBIT_____

EDINBURG CONSOLIDATED INDEPENDENT SCHOOL DISTRICT
PURCHASING DEPARTMENT
411 North 8th/DRAWER 990
EDINBURG, TEXAS 78541
PHONE: (956) 289-2311
FAX (956) 383-7687

C9
38310

August 5, 2010

Sport Supply dba/BSN/Collegiate Pacific
P.O. BOX 7726
Dallas, TX 75209
Contact: John Stafford

FAX: 800-365-7653

Dear Mr. Stafford;

REF: REQUEST FOR INFORMATION - FOR CONTRACT RENEWAL
BID 09-172, TENNIS SUPPLIES

Our original bid specifications provided for an extension of the awarded contract if both parties agreed in writing on the extension and if the unit prices, discounts, terms and conditions remained the same as the cost for contract renewal. If accepted by the Edinburg CISD, the renewal contract will start October 1, 2010 through September 30, 2011.

We are interested in knowing whether your company will extend this contract for an additional year. ***If your renewal extension is accepted by the Edinburg CISD, this form will be signed and faxed back to your company to notify you of the renewed contract. The Edinburg CISD reserves the right to accept or reject the renewal of this contract and to bid out a new contract.***

Please call Soledad Schuller, Buyer at 956-289-2311, Ext. 2138 if you have any questions regarding this contract.

JOHN STAFFORD _ I've enclosed our latest exception list.
Bid Specialist

YES: _____ per original discounts, terms, and conditions.
Vendor Signature

NO: _____, I am not interested in extending my awarded contract.
Vendor Signature

Approved for Renewal:

_____
Edinburg CISD Date

Sport Supply Group, Inc.
dba BSN Sports/Collegiate Pacific
PO Box 7726
Dallas, TX 75209

EXHIBIT_____

EDINBURG CONSOLIDATED INDEPENDENT SCHOOL DISTRICT
PURCHASING DEPARTMENT
411 North 8th/DRAWER 990
EDINBURG, TEXAS 78541
PHONE: (956) 289-2311
FAX (956) 383-7687

August 5, 2010

Top Sox
6511 Mona Vista Drive
Houston, TX 77083
Contact: Leslie G. Meltzer

FAX: 281-933-3231

Dear Mrs. Meltzer;

REF: REQUEST FOR INFORMATION - FOR CONTRACT RENEWAL
BID 09-172, TENNIS SUPPLIES

Our original bid specifications provided for an extension of the awarded contract if both parties agreed in writing on the extension and if the unit prices, discounts, terms and conditions remained the same as the cost for contract renewal. If accepted by the Edinburg CISD, the renewal contract will start October 1, 2010 through September 30, 2011.

We are interested in knowing whether your company will extend this contract for an additional year. ***If your renewal extension is accepted by the Edinburg CISD, this form will be signed and faxed back to your company to notify you of the renewed contract. The Edinburg CISD reserves the right to accept or reject the renewal of this contract and to bid out a new contract.***

Please call Soledad Schuller, Buyer at 956-289-2311, Ext. 2138 if you have any questions regarding this contract.

YES: _____, per original discounts, terms, and conditions.
Vendor Signature

NO: _____, I am not interested in extending my awarded contract.
Vendor Signature

Approved for Renewal:

_____
Edinburg CISD Date

EXHIBIT_____

EDINBURG CONSOLIDATED INDEPENDENT SCHOOL DISTRICT
PURCHASING DEPARTMENT
411 North 8th/DRAWER 990
EDINBURG, TEXAS 78541
PHONE: (956) 289-2311
FAX (956) 383-7687

04
38389

August 5, 2010

U.S. Games
P.O. BOX 7726
Dallas, TX 75209
Contact: Chris Bloomfield

FAX: 800-365-7653

Dear Mr. Bloomfield;

REF: REQUEST FOR INFORMATION - FOR CONTRACT RENEWAL
BID 09-172, TENNIS SUPPLIES

Our original bid specifications provided for an extension of the awarded contract if both parties agreed in writing on the extension and if the unit prices, discounts, terms and conditions remained the same as the cost for contract renewal. If accepted by the Edinburg CISD, the renewal contract will start October 1, 2010 through September 30, 2011.

We are interested in knowing whether your company will extend this contract for an additional year. ***If your renewal extension is accepted by the Edinburg CISD, this form will be signed and faxed back to your company to notify you of the renewed contract. The Edinburg CISD reserves the right to accept or reject the renewal of this contract and to bid out a new contract.***

Please call Soledad Schuller, Buyer at 956-289-2311, Ext. 2138 if you have any questions regarding this contract.

CHRIS BLOOMFIELD
BID DIRECTOR

YES:_____, per original discounts, terms, and conditions.
Vendor Signature

NO:_____, I am not interested in extending my awarded contract.
Vendor Signature

Approved for Renewal:

_____
Edinburg CISD Date

EXHIBIT_____

EDINBURG CONSOLIDATED INDEPENDENT SCHOOL DISTRICT
PURCHASING DEPARTMENT
411 North 8th/DRAWER 990
EDINBURG, TEXAS 78541
PHONE: (956) 289-2311
FAX (956) 383-7687

August 5, 2010

Barcelona Sporting Goods
202 Industrial Way
La Feria, TX 78559
Contact: Alicia Woodman

FAX: 956-797-5011

Dear Mrs. Woodman;

REF: REQUEST FOR INFORMATION - FOR CONTRACT RENEWAL
BID 09-172, TENNIS SUPPLIES

Our original bid specifications provided for an extension of the awarded contract if both parties agreed in writing on the extension and if the unit prices, discounts, terms and conditions remained the same as the cost for contract renewal. If accepted by the Edinburg CISD, the renewal contract will start October 1, 2010 through September 30, 2011.

We are interested in knowing whether your company will extend this contract for an additional year. ***If your renewal extension is accepted by the Edinburg CISD, this form will be signed and faxed back to your company to notify you of the renewed contract. The Edinburg CISD reserves the right to accept or reject the renewal of this contract and to bid out a new contract.***

Please call Soledad Schuller, Buyer at 956-289-2311, Ext. 2138 if you have any questions regarding this contract.

YES: _____, per original discounts, terms, and conditions.
Vendor Signature

NO: _____, I am not interested in extending my awarded contract.
Vendor Signature

Approved for Renewal:

_____
Edinburg CISD Date

EXHIBIT_____

APPROVED VENDORS		
Flaghouse Inc. 601 Flaghouse Drive Hasbrouck Heights, NJ 07604 PH: 800-793-7900 FX: 800-793-7922	10%	ID #16GBTRAB, $100 minimum order requirement, free shipping on parcel items, no handling & packaging charges, restocking fee's apply only on some items.
GL Sports P.O. BOX 567 Brainerd, MN 56401 PH: 800-950-3320 FX: 800-950-9301 www.glsports.com	0%	2009 GLSports catalog, shipping charges will be added to invoice, restocking fee's apply, prices will increase for 2010 due to manufacture price increase, minimum order required $50.00
Leslie G. 6511 Mona Vista Drive Houston, TX 77083 PH: 281-933-1749 FX: 281-933-3231	75% Off shelf prices	Minimum of 12 items per order, no packing & handling charges, shipping charges will be added to invoice/quote.
McAllen Sports 109 South 17th Street McAllen, TX 78501 PH: 956-687-5500 FX: 9856-682-1394	10%	$50 minimum order required, 10% shipping charges 20%, packing & handling charges 8%, restocking fee 20%
Sportime 3155 Northwoods Pkw Norcross, GA 30071 PH: 800-523-8176 FX: 800-333-0712 www.sportime.com	0-15% off Catalog	Use Catalog bid #74665 on all orders, 2009 Sportime, with exceptions, no minimum order required, FOB overnight and second day charge accrued, no packing & handling charge, no re-stocking fee
Sport Supply dba/BSN P.O. BOX 7726 Dallas, TX 75209 PH: 800-527-7510 X7324 FX: 972-484-5749 www.bsnsports.com	10% With exceptions	When ordering use #09-38390, C#1025862 on all orders, 2009 BSN Summer catalog, minimum order $25, FOB destination, no packing & handling charges, 20-25% restocking fee
TopSox 6511 Mona Vista Drive Houston, TX 77083 PH: 281-933-1749 FX: 281-933-3231	75% Off shelf prices	Minimum of 12 items per order, no packing & handling charges, shipping charges will be added to invoice/quote.

EXHIBIT_____

APPROVAL OF BID 09-179, GLASS PRODUCTS AND RELATED ITEMS FIRST AND FINAL CONTRACT RENEWAL

Superintendent's Recommendation

That the Board of Trustees approve the recommendation to renew the Glass products and Related Items bid which is indicated in the attached renewal forms as being the most favorable and advantageous to the Edinburg CISD.

Rationale

This bid has a one year renewal option. Mr. Robert J. Saenz, Director of Maintenance & Facilities; Mr. Rudy Zamora, Director of Transportation and the awarded vendors have agreed in writing to continue this bid for an additional year at no increase in cost.

The administration sought competitive sealed bids for Glass Products & Related Items. Bid opening was held at the Business Office Building on September 4, 2009 at 2:30 P.M., where four (4) proposals were received. The Glass Products & Related Items Bid is used district wide for approved projects, such as, installation of a window for visibility to ensure safety of all students and staff. Occasionally, windows are broken due to vandalism, weed-eaters, and other unforeseen circumstances and need to be repaired to secure our facilities.

Budgetary Information

Award Recommendation **$25,000.00**

Account	Description	Aropriations	Encumbrance	Expenditure	Balance
199-51-6319-19-936-199000	Supply/Maint/Operations	575,943.00	0.00	0.00	575,943.00
199-34-6319-xx-939-199000	Supply/Maint/Operations	585,351.00	0.00	0.00	585,351.00
	TOTAL	**1,161,294.00**	**0.00**	**0.00**	**1,161,294.00**

Resource Personnel

Dr. René Gutiérrez
Mario H. Salinas
Amaro Tijerina
Rigoberto V. Abrego
Rudy Zamora
Kay W. Green
Sylvia D. Garcia
Robert J. Saenz

Board Policy Reference

This is in accordance with Board Policy CH, Purchasing Law Bidding Requirements.

Prepared by: _____
Robert J. Saenz, Director of Maintenance/Facilities

Approved by: _____
Rudy Zamora, Director of Transportation

Approved by: _____
Mario H. Salinas, Asst. Supt. For District Administration

Within Budgetary Allocations: _____
Sylvia D. Garcia, Director for Finance

Approved by: _____
Rigoberto V. Abrego, Asst. Supt. For Finance/Operations

Recommended by: _____
Dr. René Gutiérrez, Superintendent of Schools

EXHIBIT_____PAGE(S)_____

08-30-10 A11:31 RCVD M

Notes for Renewal
Bid 09-179, Glass Products and Related Items First & Final Renewal
September 28, 2010

1. **USER DEPARTMENT**: This renewal was requested by Director of Maintenance and Facilities and Director of Transportation. Mr. Robert J. Saenz and Mr. Rudy Zamora will be present to answer any detailed questions regarding this bid.

2. **TYPE OF BID**: This is a term contract for beginning November 1, 2010 and ending October 31, 2011. This is the first and final renewal contract.

3. **BID EVALUATION**: This bid was evaluated by Mr. Robert J. Saenz, Coordinator of Maintenance and Facilities and Rudy Zamora. Final recommendations to the board are done by the Superintendent of School.

4. **ORDERING INFORMATION**: Your unit prices will be made available to the Maintenance and Facilities and Transportation Departments who will prepare purchase orders on an as needed basis following Board of Trustee approval.

5. **UNIT PRICES**: The unit prices will remain the same for the term of the contract.

6. **APPROXIMATE AMOUNT SPENT LAST CONTRACT PERIOD: $19,659.62**

7. **TOTAL ESTIMATED AWARD RECOMMENDATION: $25,000.00**

VENDORS	AWARD RECOMMENDATION
G & S Auto Glass	$9,024.00
Mares Glass	$5,537.00
Windshields Express	$2,350.00
Safety Glass Company	$1,225.00
Mares Glass Labor - Estimated	$6,864.00
TOTAL ESTIMATED RECOMMENDATION	**$25,000.00**

EXHIBIT_____

EDINBURG CONSOLIDATED INDEPENDENT SCHOOL DISTRICT
UNIT PRICE ANALYSIS (WITH EXTENDED TOTALS)

CONTROL: 09 GLASS
PAGE/PART: 1/1
BUYER: KAY GREEN
OPEN DATE: 09/04/09
EFFECTIVE: 11/01/09
EXPIRATION: 10/31/10
ENTERED: 09/08/09
PRINTED: 08/30/10

			VENDOR 1 (5077)	VENDOR 2 (3471)	VENDOR 3 (6197)
			G & S AUTO GLASS	MARES GLASS	WINDSHIELDS XPRESS
			EDINBURG TX 78541	EDINBURG TX 78539	PHARR TX 78577
		DELIVERY DAYS:	1	1	5
		TERMS:	NET 30	NET 30	-1% IF PAID IN 15 DAYS
		OTHER 1:	GUSTAVO CASAS	OSCAR MARES	JUAN C ISASI
		OTHER 2:			
		NOTE:			
		CODES:			
440-42-01010-6	GLASS, 1/8" DSB Clear	400 SQFT	1.800* A	2.850	2.900
440-42-01020-5	PLEXIGLASS, 1/8" DSB Clear	400 SQFT	5.500	4.500	4.250* A
440-42-01030-4	PLEXIGLASS, 1/4" DSB Clear	400 SQFT	6.500	6.000* A	6.500
440-42-01040-3	GLASS, 1/8" Bronze	200 SQFT	2.600* A	3.500	3.250
440-42-01050-2	GLASS, 1/8" DSB Grey, S-108	200 SQFT	2.600* A	3.500	3.250
440-42-01060-1	LEXAN PLASTIC GLASS, 1/8"	100 SQFT	12.000	8.500	6.500* A
440-50-01010-5	ONE WAY MIRROR, Laminated, 1/4"	100 SQFT	16.500	16.750	NB
440-50-01020-4	MASTIC, Mirror	100 TUBE	5.500	4.500* A	5.000
440-50-01030-3	MASTIC, Mirror	20 GAL	25.000	20.000* A	34.500
440-50-01040-2	GLAZING BEAD, Strip, 12 ft.	200 FT	4.500	1.250* A	3.950
440-50-01050-1	GLAZING BEAD, Strip, 24 ft.	200 FT	4.500	1.500* A	NB
440-50-01060-0	ALUMINUM TRACK, Top Header	100 FT	2.090* A	2.750	6.000
440-50-01070-9	ALUMINUM TRACK, Bottom	100 FT	2.090* A	2.750	6.000
440-50-01080-8	H-BAR STRIPS, (for showcases)	100 FT	1.500* A	1.850	6.000
440-50-01090-7	J-BAR STRIPS, Silver, 5/8"	200 FT	2.090	1.950* A	6.750
440-50-01100-4	CLIPS, Plastic (for 1/4" mirrors)	100 EACH	0.540	0.500T A	1.750
440-50-01110-3	CLIPS, Dallas (for 1/4" mirrors)	100 EACH	0.650	0.500	1.750
440-63-00010-1	GLASS, Bronze Laminate, 1/4"	400 SQFT	4.960* A	7.500	7.950
440-63-01005-0	GLASS, Clear Laminted, 1/4"	500 SQFT	4.960* A	7.000	7.950
440-63-02031-5	GLASS, Grey Laminated, 1/4"	450 SQFT	4.960* A	7.500	7.950
440-84-03010-3	GLASS, Wire, 1/4"	100 SQFT	12.980	12.000T A	24.000
910-30-10010-0	HOURLY RATE FOR LABOR	1 HOUR	78.500	48.500 A	45.000
910-30-20010-8	HOULRLY RATE FOR	1 HOUR	78.500	48.500 A	65.000

EXHIBIT _____

EDINBORG CONSOLIDATED INDEPENDENT SCHOOL DISTRICT
UNIT PRICE ANALYSIS (WITH EXTENDED TOTALS)

VENDOR 4 (5048)
SAFETY GLASS CO
MCALLEN TX 78502-2885

CONTROL: 09 GLASS
PAGE/PART: 1/2
BUYER: KAY GREEN
OPEN DATE: 09/04/09
EFFECTIVE: 11/01/09
EXPIRATION: 10/31/10
ENTERED: 09/08/09
PRINTED: 08/30/10

DELIVERY DAYS: 1
TERMS: NET 30
OTHER 1: CHARLES THOMPSON
OTHER 2:
NOTE:
CODES:

440-42-01010-6	GLASS, 1/8" DSB Clear	400 SQFT	3.000
440-42-01020-5	PLEXIGLASS, 1/8" DSB Clear	400 SQFT	6.000
440-42-01030-4	PLEXIGLASS, 1/4" DSB Clear	400 SQFT	8.000
440-42-01040-3	GLASS, 1/8" Bronze	200 SQFT	4.000
440-42-01050-2	GLASS, 1/8" DSB Grey, S-108	200 SQFT	4.000
440-42-01060-1	LEXAN PLASTIC GLASS, 1/8"	100 SQFT	10.000
440-50-01010-5	ONE WAY MIRROR, Laminated, 1/4"	100 SQFT	12.000* A ✓
440-50-01020-4	MASTIC, Mirror	100 TUBE	5.000
440-50-01030-3	MASTIC, Mirror	20 GAL	35.000
440-50-01040-2	GLAZING BEAD, Strip, 12 ft.	200 FT	4.000
440-50-01050-1	GLAZING BEAD, Strip, 24 ft.	200 FT	6.000
440-50-01060-0	ALUMINUM TRACK, Top Header	100 FT	3.000
440-50-01070-9	ALUMINUM TRACK, Bottom	100 FT	3.000
440-50-01080-8	H-BAR STRIPS, (for showcases)	100 FT	6.000
440-50-01090-7	J-BAR STRIPS, Silver, 5/8"	200 FT	3.000
440-50-01100-4	CLIPS, Plastic (for 1/4" mirrors)	100 EACH	0.500T
440-50-01110-3	CLIPS, Dallas (for 1/4" mirrors)	100 EACH	0.250* A ✓
440-63-00010-1	GLASS, Bronze Laminate, 1/4"	400 SQFT	7.000
440-63-01005-0	GLASS, Clear Laminted, 1/4"	500 SQFT	6.000
440-63-02031-5	GLASS, Grey Laminated, 1/4"	450 SQFT	7.000
440-84-03010-3	GLASS, Wire, 1/4"	100 SQFT	12.000T
910-30-10010-0	HOURLY RATE FOR LABOR	1 HOUR	20.000* B
910-30-20010-8	HOULRLY RATE FOR	1 HOUR	30.000* B

EXHIBIT _____

EDINBURG CONSOLIDATED INDEPENDENT SCHOOL DISTRICT
UNIT PRICE ANALYSIS (WITH EXTENDED TOTALS)

CONTROL: 09 GLASS
PAGE/PART: 2/1
BUYER: KAY GREEN
OPEN DATE: 09/04/09
EFFECTIVE: 11/01/09
EXPIRATION: 10/31/10
ENTERED: 09/08/09
PRINTED: 08/30/10

DELIVERY DAYS:
TERMS:
OTHER 1:
OTHER 2:
NOTE:
CODES:

EMERGENCY (AFTER HOUR)

	VENDOR 1 (5077)	VENDOR 2 (3471)	VENDOR 3 (6197)
	G & S AUTO GLASS	MARES GLASS	WINDSHIELDS XPRESS
	EDINBURG TX 78541	EDINBURG TX 78539	PHARR TX 78577
DELIVERY DAYS:	1	1	5
TERMS:	NET 30	NET 30	-1% IF PAID IN 15 DAYS
OTHER 1:	GUSTAVO CASAS	OSCAR MARES	JUAN C ISASI
CONTROL TOTAL	21516.00 LT	23062.00	26132.50 NI
Award Recommendation	$9,024.00	$5,537.00	$2,350.00

ITEM COMMENTS
ITEM# VENDOR COMMENT

"NO BID" AND LATE RESPONSES

901 254 CHALK'S TRUCK PART

CODE DEFINITIONS

* Low Bid On Item
A AWARD RECOMMENDATION
B Does not meet specs
LT Low Total
NB No Bid
NI DidNot Bid All Items
Q Different Quantity
T Tie

EXHIBIT _____

EDINBURG CONSOLIDATED INDEPENDENT SCHOOL DISTRICT
UNIT PRICE ANALYSIS (WITH EXTENDED TOTALS)

VENDOR 4 (5048)

SAFETY GLASS CO
MCALLEN TX 78502-2885

CONTROL:	09 GLASS		
PAGE/PART:	2/2	DELIVERY DAYS:	1
BUYER:	KAY GREEN	TERMS:	NET 30
OPEN DATE:	09/04/09	OTHER 1:	CHARLES THOMPSON
EFFECTIVE:	11/01/09	OTHER 2:	
EXPIRATION:	10/31/10	NOTE:	
ENTERED:	09/08/09	CODES:	
PRINTED:	08/30/10		

EMERGENCY (AFTER HOUR)

CONTROL TOTAL 25875.00

Award Recommendation $1,225.00

EXHIBIT _____

316-7550

EDINBURG CONSOLIDATED INDEPENDENT SCHOOL DISTRICT
PURCHASING DEPARTMENT
DRAWER 990
EDINBURG, TEXAS 78540
PHONE: (956) 289-2311
FAX (956) 383-7687

MEMORANDUM

Date: July 22, 2010

TO: Robert J. Saenz, Coordinator of Maintenance & Facilities

FROM: Kay W. Green, Buyer

SUBJECT: **RENEWAL OF BID 09-179, GLASS PRODUCTS & RELATED ITEMS**

There is an option to renew the above mentioned bid. Attached is the detailed information on what was awarded last year Hopefully, this will assist you in making your decision.

Please sign and return back to me for processing. Let me know as soon as possible, if you have any questions, give me a call at 956-289-2311 Ext. 2178.

Yes, I want to renew: ✓ _____

No, I don't want to renew: _____

Reason why you don't want to renew:

_____

_____

_____

_____

_____

_____

THANK YOU!

Nondiscrimination Statement:

It is the policy of Edinburg CISD not to discriminate on the basis of sex, age, handicap, religion, race, color, or national origin in its educational programs

EXHIBIT_____

EDINBURG CONSOLIDATED INDEPENDENT SCHOOL DISTRICT
PURCHASING DEPARTMENT
DRAWER 890
EDINBURG, TEXAS 78540
PHONE: (956) 289-2311
FAX (956) 383-7687

MEMORANDUM

Date: August 23, 2010

TO: Rudy Zamora, Director of Transportation

FROM: Kay W. Green, Buyer

SUBJECT: **RENEWAL OF BID 09-179, GLASS PRODUCTS & RELATED ITEMS**

There is an option to renew the above mentioned bid. Attached is the detailed information on what was awarded last year. Hopefully, this will assist you in making your decision.

Please sign and return back to me for processing. Let me know as soon as possible, if you have any questions, give me a call at 956-289-2311 Ext. 2178.

Yes, I want to renew: _____

No, I don't want to renew: _____

Reason why you don't want to renew:

_____

_____

_____

_____

_____

_____

THANK YOU!

Nondiscrimination Statement

It is the policy of Edinburg CISD not to discriminate on the basis of sex, age, handicap, religion, race, color, or national origin in its' educational programs.

EXHIBIT_____

EDINBURG CONSOLIDATED INDEPENDENT SCHOOL DISTRICT
PURCHASING DEPARTMENT
411 North 8th/DRAWER 990
EDINBURG, TEXAS 78541
PHONE: (956) 289-2311
FAX (956) 383-7687

August 4, 2010

Dear G & S Auto Glass, FAX: 956-287-1161

REF: REQUEST FOR INFORMATION - FOR CONTRACT RENEWAL RFP 09-179, GLASS PRODUCTS & RELATED ITEMS

Our original bid specifications provided for an extension of the awarded contract if both parties agreed in writing on the extension and if the unit prices, discounts, terms and conditions remained the same as the cost for contract renewal. If accepted by the Edinburg CISD, the renewal contract will start November 1, 2010 or soon thereafter and end October 31, 2011. Please see attachment for current pricing.

We are interested in knowing whether your company will extend this contract for an additional contract period. ***If your renewal extension is accepted by the Edinburg CISD, this form will be signed and faxed back to your company to notify you of the renewed contract. The Edinburg CISD reserves the right to accept or reject the renewal of this contract and to bid out a new contract.***

Please call Kay W. Green, Buyer at 956-289-2311, Ext. 2178 or e-mail at k.green@ecisd.us if you have any questions regarding this contract.

YES: _____, per original discounts, terms, and conditions.
Vendor Signature

NO: _____, I am not interested in extending my awarded contract.
Vendor Signature

G&S GLASS LLC
Company Name

Approved for Renewal:

_____
Edinburg CISD Date

EXHIBIT_____

EDINBURG CONSOLIDATED INDEPENDENT SCHOOL DISTRICT
PURCHASING DEPARTMENT
411 North 8th/DRAWER 990
EDINBURG, TEXAS 78541
PHONE: (956) 289-2311
FAX (956) 383-7687

August 4, 2010

Dear Mares Glass, FAX: 956-381-9318

REF: REQUEST FOR INFORMATION - FOR CONTRACT RENEWAL RFP 09-179, GLASS PRODUCTS & RELATED ITEMS

Our original bid specifications provided for an extension of the awarded contract if both parties agreed in writing on the extension and if the unit prices, discounts, terms and conditions remained the same as the cost for contract renewal. If accepted by the Edinburg CISD, the renewal contract will start November 1, 2010 or soon thereafter and end October 31, 2011. Please see attachment for current pricing.

We are interested in knowing whether your company will extend this contract for an additional contract period. ***If your renewal extension is accepted by the Edinburg CISD, this form will be signed and faxed back to your company to notify you of the renewed contract. The Edinburg CISD reserves the right to accept or reject the renewal of this contract and to bid out a new contract.***

Please call Kay W. Green, Buyer at 956-289-2311, Ext. 2178 or e-mail at k.green@ecisd.us if you have any questions regarding this contract.

YES: yes Oscar Mares, per original discounts, terms, and conditions.
Vendor Signature

NO:_____, I am not interested in extending my awarded contract.
Vendor Signature

Mares Glass
Company Name

Approved for Renewal:

_____
Edinburg CISD Date

EXHIBIT_____

EDINBURG CONSOLIDATED INDEPENDENT SCHOOL DISTRICT
PURCHASING DEPARTMENT
411 North 8th/DRAWER 990
EDINBURG, TEXAS 78541
PHONE: (956) 289-2311
FAX (956) 383-7687

August 4, 2010

Dear Windshield Express, FAX: 956-283-9085

REF: REQUEST FOR INFORMATION - FOR CONTRACT RENEWAL RFP 09-179, GLASS PRODUCTS & RELATED ITEMS

Our original bid specifications provided for an extension of the awarded contract if both parties agreed in writing on the extension and if the unit prices, discounts, terms and conditions remained the same as the cost for contract renewal. If accepted by the Edinburg CISD, the renewal contract will start November 1, 2010 or soon thereafter and end October 31, 2011. Please see attachment for current pricing.

We are interested in knowing whether your company will extend this contract for an additional contract period. ***If your renewal extension is accepted by the Edinburg CISD, this form will be signed and faxed back to your company to notify you of the renewed contract. The Edinburg CISD reserves the right to accept or reject the renewal of this contract and to bid out a new contract.***

Please call Kay W. Green, Buyer at 956-289-2311, Ext. 2178 or e-mail at k.green@ecisd.us if you have any questions regarding this contract.

✓ YES: _____, per original discounts, terms, and conditions.
Vendor Signature

NO: _____ _____, I am not interested in extending my awarded contract.
Vendor Signature

Windshield Xpress
Company Name

Approved for Renewal:

_____
Edinburg CISD Date

EXHIBIT_____

EDINBURG CONSOLIDATED INDEPENDENT SCHOOL DISTRICT
PURCHASING DEPARTMENT
411 North 8th/DRAWER 990
EDINBURG, TEXAS 78541
PHONE: (956) 289-2311
FAX (956) 383-7687

August 4, 2010

Dear Safety Glass Company, FAX: 956-686-0073

REF: REQUEST FOR INFORMATION - FOR CONTRACT RENEWAL
RFP 09-179, GLASS PRODUCTS & RELATED ITEMS

Our original bid specifications provided for an extension of the awarded contract if both parties agreed in writing on the extension and if the unit prices, discounts, terms and conditions remained the same as the cost for contract renewal. If accepted by the Edinburg CISD, the renewal contract will start November 1, 2010 or soon thereafter and end October 31, 2011. Please see attachment for current pricing.

We are interested in knowing whether your company will extend this contract for an additional contract period. ***If your renewal extension is accepted by the Edinburg CISD, this form will be signed and faxed back to your company to notify you of the renewed contract. The Edinburg CISD reserves the right to accept or reject the renewal of this contract and to bid out a new contract.***

Please call Kay W. Green, Buyer at 956-289-2311, Ext. 2178 or e-mail at k.green@ecisd.us if you have any questions regarding this contract.

YES: Chad Thompson, per original discounts, terms, and conditions.
Vendor Signature

NO: _____, I am not interested in extending my awarded contract.
Vendor Signature

SAFETY GLASS CO.
BOX 2885
McALLEN, TX 78501
Company Name

Approved for Renewal:

_____
Edinburg CISD Date

10/16/2029 00:02 #1514 P.001/001

EXHIBIT_____

APPROVAL OF BID 10-05, GOLF SUPPLIES – FIRST AND FINAL RENEWAL

Superintendent's Recommendation

That the Board of Trustees approve the recommendation to renew the Golf Supplies term bid, which is indicated in the attached renewal forms as being the most favorable and advantageous to the Edinburg CISD.

Rationale

All the supplies and equipment are needed for their respective sports. All sports are treated equally as to the amounts of money budgeted with respect to the numbers of athletes and cost of the individual equipment needed per sport. Gender is of no consequence and is treated equally.

The administration sought competitive sealed bids for the above mentioned bid. Bid opening was held at the Business Office Building on September 18, 2009, at 2:00 P.M. nine (9) proposals were received, opened, and read aloud.

Budgetary Information

TOTAL ESTIMATED AWARD RECOMMENDATION: **$20,000.00**

ACCOUNT	DESCRIPTION	APPROPRIATION	ENCUMBRANCE	EXPENDITURE	BALANCE
167-36-6399-49-XXX-1XX-000	Golf	$20,700.00	0.00	0.00	$20,700.00
	TOTALS	**$20,700.00**	**0.00**	**0.00**	**$20,700.00**

Resource Personnel

Dr. René Gutiérrez
Maria Luisa Guerra
Soledad Schuller
Rigoberto V. Abrego
Joe Filoteo, Jr.
Sylvia D. Garcia
Amaro Tijerina

Board Policy Reference

This is in accordance with the Board Policy CH Purchasing Bidding Requirements.

Prepared by: _____
Joe Filoteo, Jr., Director of Athletics

Approved by: _____
Maria Luisa Guerra, Asst. Supt. for Instruction and Support Services

Within Budgetary Allocations: _____
Sylvia D. Garcia, Director for Finance

Approved by: _____
Rigoberto V. Abrego, Asst. Supt. for Finance/Operations

Recommended by: _____
Dr. René Gutiérrez, Superintendent of Schools

EXHIBIT_____PAGE(S)_____

06-30-10 A10:09 RCVD

M

Notes for Bid Tabulation
Bid 10-05, GOLF SUPPLIES - RENEWAL
SEPTEMBER 14, 2010

1. **USER DEPARTMENT**: This bid was requested by the Athletic Department. Joe Filoteo Jr., Director for Athletics will be present to answer any detailed questions regarding this bid.

2. **TYPE OF BID**: This is a term bid beginning October 1, 2010 and ending September 30, 2011. This will be the last renewal for this contract.

3. **BID EVALUATION**: This bid was evaluated by Mario Lopez, Athletic Supervisor for Purchasing & Fields. Final recommendations to the board are done by the Superintendent of Schools.

4. **ORDERING INFORMATION**: The campuses will prepare purchase orders following Board of Trustee bid approval.

5. **UNIT PRICES**: Prices are good for the term of the contract.

6. **APPROXIMATE AMOUNT SPENT LAST YEAR:** **$23,000.00**

7. **TOTAL ESTIMATED AWARD RECOMMENDATION:** **$20,000.00**

PRIMARY VENDOR

Schools/departments will place orders from the approved "primary" vendor or vendors according to the catalog price less the applicable discount allowed on any orders under $1,000.00. Items, which are not available from the approved "primary" vendor, will be purchased from the approved vendor list determined to offer the second lowest net prices. All orders over $1,000.00 will require at least 3 quotes from the board approved vendors list.

VENDORS	DISCOUNT	NOTES
Edwin Watts Golf Shop 4526 South Padre Island Dr. Corpus Christi, Texas 78411 Phone: 361-852-0358 Contact: Lee Smith	10%	Fall 2009 Catalog, manufacturer prices subject to change, shipping charges vary, no restocking fee's, no packing & handling charges, no minimum order required.

EXHIBIT_____

APPROVED VENDORS		
VENDORS	**DISCOUNT**	**NOTES**
Bill Guthrie Sports, Inc. 5701 W. Expressway 83 Harlingen, TX 78552 Phone: 956-428-6462 Contact: Ed Sanchez	2%-10%	2009 Bill Guthrie Sports/BSN, $100 minimum order required, 17% shipping charges, no packing & handling charges, restocking fee only on non stock items.
Elliot's Custom Golf 712 N. 77 Sunshine Strip #20 Harlingen, Texas 78550 Phone: 877-428-5448 Contact: Tim Elliott	10% Shelf price	No packing & handling charges, no restocking fees, 14 days ARO, please call company for minimum orders, no shipping charges, net prices available upon request.
Flaghouse Incorporated 601 Flaghouse Drive Hasbrouck Heights, NJ 07604 Phone: 800-793-7900 Contact: Andrew C. Strauss	10%	Fall/Winter 2009, Flaghouse Physical Education and Recreation Catalog, $100 minimum order required, restocking fees vary, call in to get shipping charges.
John Deere Landscapes 1385 East 36th Street Cleveland, OH 44114 Phone: 800-321-5325, Ext. 6550 Local: 956-631-3600 Contact: Margaret Dvorznak	15%	2009 Par-Aide Catalog, no minimum order required, F.O.B destination, no packing & handling charges, restocking fee's will apply
McAllen Sports 109 S. 17th Street McAllen, Texas 78501 Phone: 956-687-5500 Contact: Joe Escamilla	10%	No shipping charges, $50 minimum order required, prices are not guaranteed, no packing & handling charges, restocking fee's apply
Sport Supply Group, Inc. Dba/BSN Sports/Collegiate Pacific P.O. BOX 7726 Dallas, TX 75209 Phone: 800-527-7510 Ext. 9071 Contact: Mike Wilson	10% With Exceptions	Please use C#1025862 Bid #09-38512 on all purchase orders, 2009 Fall BSN Sports, minimum order required $25, no packing & handling charges, 20-25% charge fee on restocking
Team Sports of Texas P.O. BOX 320 Victoria, Texas 77902 Phone: 800-242-0151 Contact: Craig Hale	10%	2008-2009 Team Sports Catalog, no minimum order required, no shipping charges, no packing & handling charges, no restocking fee
Woody's Sporting Goods 202 Industrial Way La Feria, Texas 78559 Phone: 956-797-5002 Contact: Ron Woodman	25%	2009-2010 Various Catalogs, minimum order $100, no packing & handling charges, 15% shipping charges, 20% restocking fee on non-stock items

BID EVALUATION NOTES:

A - Award recommendation to most advantageous bidder.

**Please note that Woody's Sporting Goods was purchased by Barcelona Sporting Goods, and will be representing the Rio Grande Valley Division, beginning January 1, 2010, and the letters of renewal will be from Barcelona Sporting Goods.

EXHIBIT _____

EDINBURG CONSOLIDATED INDEPENDENT SCHOOL DISTRICT
PURCHASING DEPARTMENT
411 North 8th/DRAWER 990
EDINBURG, TEXAS 78541
PHONE: (956) 289-2311
FAX (956) 383-7687

June 21, 2010

Edwin Watts Golf Shop
4526 South Padre Island Dr.
Corpus Christi, Texas 78411
Contact: Lee Smith

FAX: 361-852-0024

Dear Mr. Smith;

REF: REQUEST FOR INFORMATION - FOR CONTRACT RENEWAL
BID 10-05, GOLF SUPPLIES

Our original bid specifications provided for an extension of the awarded contract if both parties agreed in writing on the extension and if the unit prices, discounts, terms and conditions remained the same as the cost for contract renewal. If accepted by the Edinburg CISD, the renewal contract will start October 1, 2010 or soon thereafter and end September 30, 2011.

We are interested in knowing whether your company will extend this contract for an additional year. ***If your renewal extension is accepted by the Edinburg CISD, this form will be signed and faxed back to your company to notify you of the renewed contract. The Edinburg CISD reserves the right to accept or reject the renewal of this contract and to bid out a new contract.***

Please call Soledad Schuller, Buyer at 956-289-2311, Ext. 2138 if you have any questions regarding this contract.

YES: Lee Smith, per original discounts, terms, and conditions.
Vendor Signature

NO:_____, I am not interested in extending my awarded contract.
Vendor Signature

Approved for Renewal:

_____
Edinburg CISD Date

XHIBIT_____

EDINBURG CONSOLIDATED INDEPENDENT SCHOOL DISTRICT
PURCHASING DEPARTMENT
400 NORTH 6TH/DRAWER 990
EDINBURG, TEXAS 78541
PHONE: (956) 289-2311
FAX: (956) 383-7687

June 21, 2010

Bill Guthrie Sports, Inc.
5701 W. Expressway 83
Harlingen, TX 78552
Phone: 956-428-6462
Contact: Ed Sanchez

FAX: 956-428-7074

Dear Mr. Sanchez;

REF: REQUEST FOR INFORMATION - FOR CONTRACT RENEWAL
BID 10-06, GOLF SUPPLIES

Our original bid specifications provided for an extension of the awarded contract if both parties agreed in writing on the extension and if the unit prices, discounts, terms and conditions remained the same as the cost for contract renewal. If accepted by the Edinburg CISD, the renewal contract will start October 1, 2010 or soon thereafter and end September 30, 2011.

We are interested in knowing whether your company will extend this contract for an additional year. ***If your renewal extension is accepted by the Edinburg CISD, this form will be signed and faxed back to your company to notify you of the renewed contract. The Edinburg CISD reserves the right to accept or reject the renewal of this contract and to bid out a new contract.***

Please call Soledad Schuller, Buyer at 956-289-2311, Ext. 2138 if you have any questions regarding this contract.

YES: _____, per original discounts, terms, and conditions.
Vendor Signature

NO: _____, I am not interested in extending my awarded contract.
Vendor Signature

Approved for Renewal:

_____
Edinburg CISD Date

XHIBIT_____

EDINBURG CONSOLIDATED INDEPENDENT SCHOOL DISTRICT
PURCHASING DEPARTMENT
411 North 8th/DRAWER 990
EDINBURG, TEXAS 78541
PHONE: (956) 289-2311
FAX (956) 383-7687

June 21, 2010

Elliot's Custom Golf
712 N. 77 Sunshine Strip #20
Harlingen, Texas 78550
Contact: Tim Elliott

FAX: 877-428-5448

Dear Mr. Elliot;

REF: REQUEST FOR INFORMATION - FOR CONTRACT RENEWAL
BID 10-05, GOLF SUPPLIES

Our original bid specifications provided for an extension of the awarded contract if both parties agreed in writing on the extension and if the unit prices, discounts, terms and conditions remained the same as the cost for contract renewal. If accepted by the Edinburg CISD, the renewal contract will start October 1, 2010 or soon thereafter and end September 30, 2011.

We are interested in knowing whether your company will extend this contract for an additional year. ***If your renewal extension is accepted by the Edinburg CISD, this form will be signed and faxed back to your company to notify you of the renewed contract. The Edinburg CISD reserves the right to accept or reject the renewal of this contract and to bid out a new contract.***

Please call Soledad Schuller, Buyer at 956-289-2311, Ext. 2138 if you have any questions regarding this contract.

YES:_____, per original discounts, terms, and conditions.
Vendor Signature

NO:_____, I am not interested in extending my awarded contract.
Vendor Signature

Approved for Renewal:

XHIBIT_____

EDINBURG CONSOLIDATED INDEPENDENT SCHOOL DISTRICT
PURCHASING DEPARTMENT
411 North 8th/DRAWER 990
EDINBURG, TEXAS 78541
PHONE: (956) 289-2311
FAX (956) 383-7687

June 21, 2010

Flaghouse Incorporated
601 Flaghouse Drive
Hasbrouck Heights, NJ 07604
Contact: Andrew C. Strauss

FAX: 800-734-2193

Dear Mr. Strauss;

REF: REQUEST FOR INFORMATION - FOR CONTRACT RENEWAL
BID 10-05, GOLF SUPPLIES

Our original bid specifications provided for an extension of the awarded contract if both parties agreed in writing on the extension and if the unit prices, discounts, terms and conditions remained the same as the cost for contract renewal. If accepted by the Edinburg CISD, the renewal contract will start October 1, 2010 or soon thereafter and end September 30, 2011.

We are interested in knowing whether your company will extend this contract for an additional year. ***If your renewal extension is accepted by the Edinburg CISD, this form will be signed and faxed back to your company to notify you of the renewed contract. The Edinburg CISD reserves the right to accept or reject the renewal of this contract and to bid out a new contract.***

Please call Soledad Schuller, Buyer at 956-289-2311, Ext. 2138 if you have any questions regarding this contract.

YES:_____, per original discounts, terms, and conditions.
Vendor Signature

NO:_____, I am not interested in extending my awarded contract.
Vendor Signature

Please put Flaghouse Bid Number: 16GBTTRB on all purchase orders against this bid.

Approved for Renewal:

_____
Edinburg CISD Date

XHIBIT_____

EDINBURG CONSOLIDATED INDEPENDENT SCHOOL DISTRICT
PURCHASING DEPARTMENT
411 North 8th/DRAWER 990
EDINBURG, TEXAS 78541
PHONE: (956) 289-2311
FAX (956) 383-7687

June 21, 2010

John Deere Landscapes
1301 E. 9th St., Ste. 1300
Cleveland, OH 44114
Contact: Margaret Dvorznak

FAX: 956-631-3631

Dear Mrs. Dvorznak;

REF: REQUEST FOR INFORMATION - FOR CONTRACT RENEWAL
BID 10-05, GOLF SUPPLIES

Our original bid specifications provided for an extension of the awarded contract if both parties agreed in writing on the extension and if the unit prices, discounts, terms and conditions remained the same as the cost for contract renewal. If accepted by the Edinburg CISD, the renewal contract will start October 1, 2010 or soon thereafter and end September 30, 2011.

We are interested in knowing whether your company will extend this contract for an additional year. ***If your renewal extension is accepted by the Edinburg CISD, this form will be signed and faxed back to your company to notify you of the renewed contract. The Edinburg CISD reserves the right to accept or reject the renewal of this contract and to bid out a new contract.***

Please call Soledad Schuller, Buyer at 956-289-2311, Ext. 2138 if you have any questions regarding this contract.

YES: Margaret Dvorznak, per original discounts, terms, and conditions.
Vendor Signature USING PAR AIDE 2010 CATALOG (ENCLOSED)

NO:_____, I am not interested in extending my awarded contract.
Vendor Signature

Approved for Renewal:

_____
Edinburg CISD Date

EXHIBIT_____

EDINBURG CONSOLIDATED INDEPENDENT SCHOOL DISTRICT
PURCHASING DEPARTMENT
411 North 8th/DRAWER 990
EDINBURG, TEXAS 78541
PHONE: (956) 289-2311
FAX (956) 383-7687

June 21, 2010

McAllen Sports
109 S. 17th Street
McAllen, Texas 78501
Contact: Joe Escamilla

FAX: 956-682-1394

Dear Ms. Escamilla;

REF: REQUEST FOR INFORMATION - FOR CONTRACT RENEWAL
BID 10-05, GOLF SUPPLIES

Our original bid specifications provided for an extension of the awarded contract if both parties agreed in writing on the extension and if the unit prices, discounts, terms and conditions remained the same as the cost for contract renewal. If accepted by the Edinburg CISD, the renewal contract will start October 1, 2010 or soon thereafter and end September 30, 2011.

We are interested in knowing whether your company will extend this contract for an additional year. ***If your renewal extension is accepted by the Edinburg CISD, this form will be signed and faxed back to your company to notify you of the renewed contract. The Edinburg CISD reserves the right to accept or reject the renewal of this contract and to bid out a new contract.***

Please call Soledad Schuller, Buyer at 956-289-2311, Ext. 2138 if you have any questions regarding this contract.

YES: _____, per original discounts, terms, and conditions.
Vendor Signature

NO: _____, I am not interested in extending my awarded contract.
Vendor Signature

Approved for Renewal:

_____
Edinburg CISD Date

EXHIBIT_____

09
385/2

EDINBURG CONSOLIDATED INDEPENDENT SCHOOL DISTRICT
PURCHASING DEPARTMENT
411 North 8th/DRAWER 990
EDINBURG, TEXAS 78541
PHONE: (956) 289-2311
FAX (956) 383-7687

June 21, 2010

Sport Supply Group, Inc.
Dba/BSN Sports/Collegiate Pacific
P.O. BOX 7726
Dallas, TX 75209
Contact: Mike Wilson

FAX: 800-365-7653

Dear Mr. Wilson;

REF: REQUEST FOR INFORMATION - FOR CONTRACT RENEWAL
BID 10-05, GOLF SUPPLIES

Our original bid specifications provided for an extension of the awarded contract if both parties agreed in writing on the extension and if the unit prices, discounts, terms and conditions remained the same as the cost for contract renewal. If accepted by the Edinburg CISD, the renewal contract will start October 1, 2010 or soon thereafter and end September 30, 2011.

We are interested in knowing whether your company will extend this contract for an additional year. ***If your renewal extension is accepted by the Edinburg CISD, this form will be signed and faxed back to your company to notify you of the renewed contract. The Edinburg CISD reserves the right to accept or reject the renewal of this contract and to bid out a new contract.***

Please call Soledad Schuller, Buyer at 956-289-2311, Ext. 2138 if you have any questions regarding this contract.

JOHN STAFFORD
Bid Specialist
I've enclosed our latest exception list.

YES: _____, per original discounts, terms, and conditions.
Vendor Signature

NO: _____, I am not interested in extending my awarded contract.
Vendor Signature

Approved for Renewal:

_____
Edinburg CISD Date

Sport Supply Group, Inc.
dba BSN Sports/Collegiate Pacific
PO Box 7726
Dallas, TX 75209

EXHIBIT_____

EDINBURG CONSOLIDATED INDEPENDENT SCHOOL DISTRICT
PURCHASING DEPARTMENT
411 North 8th/DRAWER 990
EDINBURG, TEXAS 78541
PHONE: (956) 289-2311
FAX (956) 383-7687

June 21, 2010

FAX: 361-575-8219

Team Sports of Texas
P.O. BOX 320
Victoria, Texas 77902
Contact: Craig Hale

Dear Mr. Hale;

REF: REQUEST FOR INFORMATION - FOR CONTRACT RENEWAL
BID 10-05, GOLF SUPPLIES

Our original bid specifications provided for an extension of the awarded contract if both parties agreed in writing on the extension and if the unit prices, discounts, terms and conditions remained the same as the cost for contract renewal. If accepted by the Edinburg CISD, the renewal contract will start October 1, 2010 or soon thereafter and end September 30, 2011.

We are interested in knowing whether your company will extend this contract for an additional year. ***If your renewal extension is accepted by the Edinburg CISD, this form will be signed and faxed back to your company to notify you of the renewed contract. The Edinburg CISD reserves the right to accept or reject the renewal of this contract and to bid out a new contract.***

Please call Soledad Schuller, Buyer at 956-289-2311, Ext. 2138 if you have any questions regarding this contract.

YES:_____, per original discounts, terms, and conditions.
Vendor Signature

NO:_____, I am not interested in extending my awarded contract.
Vendor Signature

Approved for Renewal:

_____
Edinburg CISD Date

EXHIBIT_____

EDINBURG CONSOLIDATED INDEPENDENT SCHOOL DISTRICT
PURCHASING DEPARTMENT
411 North 8th/DRAWER 990
EDINBURG, TEXAS 78541
PHONE: (956) 289-2311
FAX (956) 383-7687

June 21, 2010

Barcelona Sporting Goods
9999 W. Sam Houston Pkwy N.
Houston, TX 77064
Contact: Ron Woodman

FAX: 956-797-5011

Dear Mr. Woodman;

REF: REQUEST FOR INFORMATION - FOR CONTRACT RENEWAL
BID 10-05, GOLF SUPPLIES

Our original bid specifications provided for an extension of the awarded contract if both parties agreed in writing on the extension and if the unit prices, discounts, terms and conditions remained the same as the cost for contract renewal. If accepted by the Edinburg CISD, the renewal contract will start October 1, 2010 or soon thereafter and end September 30, 2011.

We are interested in knowing whether your company will extend this contract for an additional year. ***If your renewal extension is accepted by the Edinburg CISD, this form will be signed and faxed back to your company to notify you of the renewed contract. The Edinburg CISD reserves the right to accept or reject the renewal of this contract and to bid out a new contract.***

Please call Soledad Schuller, Buyer at 956-289-2311, Ext. 2138 if you have any questions regarding this contract.

YES:_____, per original discounts, terms, and conditions.
Vendor Signature

NO:_____, I am not interested in extending my awarded contract.
Vendor Signature

Approved for Renewal:

_____
Edinburg CISD Date

XHIBIT_____

APPROVAL OF BID 10-08, VOLLEYBALL SUPPLIES-FIRST AND FINAL RENEWAL

Superintendent's Recommendation

That the Board of Trustees approve the recommendation to renew the Volleyball Supplies term bid, which is indicated in the attached bid tabulation as being the most favorable and advantageous to the Edinburg CISD.

Rationale

All the supplies and equipment are needed for their respective sports. All sports are treated equally as to the amounts of money budgeted with respect to the numbers of athletes and cost of the individual equipment needed per sport. Gender is of no consequence and is treated equally.

The administration sought competitive sealed bids for the above mentioned bid. Bid opening was held at the Business Office Building on September 18, 2009, at 3:30 P.M. where seventeen (17) proposals were received, opened, and read aloud.

Budgetary Information

TOTAL ESTIMATED AWARD RECOMMENDATION: **$33,000.00**

Account	Description	Appropriations	Encumbrance	Expenditure	Balance
167-36-6399-99-XXX-1XX-000	VOLLEYBALL	$35,280.00	0.00	0.0	$35,280.00
	Total Budget:	**$35,280.00**	**0.00**	**0.0**	**$35,280.00**

Resource Personnel

Dr. René Gutiérrez
Maria Luisa Guerra
Soledad Schuller
Rigoberto V. Abrego
Joe Filoteo, Jr.
Sylvia D. Garcia
Amaro Tijerina

Board Policy Reference

This is in accordance with the Board Policy CH Purchasing Bidding Requirements.

Prepared by: _____
Joe Filoteo, Jr., Director of Athletics

Approved by: _____
Maria Luisa Guerra, Asst. Supt. for Instruction and Support Services

Within Budgetary Allocations: _____
Sylvia D. Garcia, Director for Finance

Approved by: _____
Rigoberto V. Abrego, Asst. Supt. for Finance/Operations

Recommended by: _____
Dr. René Gutiérrez, Superintendent of Schools

EXHIBIT _____, PAGE(S)_____

08-30-10A10:09 RCVD M

NOTES FOR BID TABULATION
BID 10-08, VOLLEYBALL SUPPLIES-RENEWAL
September 14, 2010

1. **USER DEPARTMENT**: This item was requested by Joe Filoteo, Jr., Director for Athletics

2. **TYPE OF BID**: This is a term bid beginning October 01, 2010 or soon thereafter and ending September 30, 2011. This will be the last renewal for this contract.

3. **BID EVALUATION**: This bid was evaluated by Mario Lopez, Supervisor for Athletic Fields and Purchasing. Final recommendations to the board are done by the Superintendent of Schools.

4. **ORDERING INFORMATION**: Each campus will prepare purchase orders following Board of Trustee bid approval.

5. **UNIT PRICES**: The catalog unit prices and discounts will remain firm for the term of the contract.

6. **AWARD RECOMMENDATION:**

7. APPROXIMATE AMOUNT SPENT LAST YEAR: **$27,000.00**

8. TOTAL ESTIMATED AWARD RECOMMENDATION: **$33,000.00**

This is an annual term contract, which will terminate September 30, 2011.

PRIMARY VENDOR **You are required to order from the Primary vendor first. Items not available from the Primary vendor may be ordered from the Approved Vendors below. You will be required to get three quotes on orders over $1,000.00.**		
VENDOR	**DISCOUNT**	**NOTES**
A & L Athletics 2206 Primrose Bldg A McAllen, TX 78504 Phone: 956-631-2300 Contact: Gilma L. Salinas	40%	2009 Catalog, no minimum required, no shipping charges, no packing & handling charges, 25% restocking fee
Bill Guthrie Sports, Inc. 5701 W. Expressway 83 Harlingen, TX 78552 Phone: 956-428-6462 Contact: William J. Guthrie	2%-10%	2009 Bill Guthrie Catalog, $100 minimum order required, 17% FOB charges, no packing & handling charges, restocking fee applies for non stock items.

EXHIBIT_____

APPROVED VENDORS

Items must be purchased from the Primary Vendor first. Items not available from the Primary vendor may be purchased from the Approved vendors.

VENDORS	DISCOUNT	NOTES
Flaghouse, Inc. 601 Flaghouse Drive Hasbrouck Heights, NJ 07604 Phone: 800-793-7900 Contact: Tennille Dudley	10%	Fall/Winter 2009 Physical Education & Recreation, use ID #16GBTTTB for this bid, minimum order required is $100, terms net 30 days, FOB destination, delivery 2-30 days ARO, no packing & handling charges, restocking on some items, free shipping on parcel items
GL Sports P.O. BOX 567 Brainerd, MN 56401 Phone: 800-950-3320 Contact: Scott Sabyan	0%	#43EDØ4, GLSports Volleyball, no minimum order, no packing & handling charges, no restocking fee's, in-stock items 5-7 day delivery, catalog prices do not include shipping, shipping will be added to invoice.
Gopher Sport P.O. BOX 998 Owatonna, MN 55060-0998 Phone: 800-533-0446 Contact: JoAnn Nagel	10%	2009/2010 Gopher Fall 2009, Gopher 2010, Gopher Fall 2010, 0-$25 requested not required, see current catalog for shipping rate, no packing & handling charges, no restocking fee
Leslie G. 6511 Mona Vista Drive Houston, Texas 77083 Phone: 281-933-1749 Contact: Leslie G. Meltzer	0% Catalog 75% Off Shelf prices	Prices not guaranteed through Oct. 2010, minimum order of 12 items that are alike, shipping will be included in quote, no restocking (not applicable), no packing & handling charges, custom made items.
McAllen Sports 109 S. 17th Street McAllen, Texas 78501 Phone: 956-687-5500 Contact: Joe Escamilla	10% Catalog 10% Off Shelf prices	Prices not guaranteed through Oct. 2010, minimum order of $50.00, no shipping charges, no packing & handling charges, restocking fee 20%
Pyramid School Products 6510 North 54th Street Tampa, Florida 33610-1908 Phone: 800-792-2644 Contact: Adrian Barton	15%	Please use project #10-08(Edinburg). This number must be on all P.O.'S. 2010 Champion Sports, minimum order of $75.00, no shipping charges, no packing & handling charges, restocking fee of 20%
Riddell/ All American 6846 Alamo Downs Parkway San Antonio, TX 78238 Phone: 210-706-3408 Contact: Robin Campbell	1-23% With exceptions	2010 Riddell All Sport Catalog, minimum order of 12 ea for custom cloth, no packing & handling charges, no re-stocking fee, please call for correct pricing. Shipping will be added to certain orders.
S & S Worldwide 75 Mill Street Colchester, CT 06415 Phone: 800-243-9232 Contact: Muriel T. Barnes	14%	2009-2010 S & S Discount Sports & PE Supplies, Discount does not apply to sale flyers or special promotions, no minimum order, shipping will be added to invoice, no packing & handling charges, no restocking fee's
Southern Athletic Supply 5828 Broadway Pearland, Texas 77581 Phone: 281-485-1950 Contact: James Novak	15%	2009 Cobbletree, Mizund, High5, Augusta, Tandem, Apparels & Accessories, no shipping charges, minimum order of $50, no packing & handling charges, 10% restocking fee.
Sport Imports, Inc. P.O. BOX 21040 Columbus, OH 43221 Phone: 800-556-3198 Contact: Rob Ebright	0%	2009 Sports Imports, Your source for Senoh, no minimum order required, 10% shipping of merchandise total, no packing & handling charges, restocking fees apply to items not returned in new condition.

EXHIBIT_____

APPROVED VENDORS **Items must be purchased from the Primary Vendor first. Items not available from the Primary vendor may be purchased from the Approved vendors.**		
VENDORS	**DISCOUNT**	**NOTES**
Sport Supply Group, Inc. Dba/BSN Sports/Collegiate Pacific P.O. BOX 7726 Dallas, TX 75209 Phone: 800-527-7510 Contact: John Stafford	10% With exceptions	Please use C#1025862, Bid #09-38513 on all orders. $25 minimum order, 2009 Fall BSN Sports, discount rate will not change, 17% shipping on truck shipments, no charge for inside delivery on UPS shipments, non standard shipping & handling will require additional charges, 20-25% restocking fee's,
Team Sports of Texas P.O. BOX 320 Victoria, Texas 77902 Phone: 800-242-0151 Contact: Craig Hale	10%	2008-2009 Team Sports Catalog, no minimum order required, no packing & handling charges, no restocking fee, no shipping.
Top Sox 6511 Mona Vista Drive Houston, Texas 77083 Phone: 281-933-1749 Contact: Leslie G. Meltzer	0%	36 pr. Custom, 24 pr. Stock minimum order, shipping will be included in invoice, restocking is not applicable, packing & handling charges.
Underdog Sports, Inc. 2430 Avenue K Plano, Texas 75074 Phone: 800-854-3516 Contact: Tom Trieu	25%	2009 www.shopadidas.com, www.mizunousa.com, www.asicsamerica.com, $50 minimum order, shipping is included with your order, no packing & handling charges, restocking 10% on price.
Woody's Sporting Goods 202 Industrial Way La Feria, Texas 78559 Phone: 956-797-5002 Contact: Ron Woodman	25% Catalog 25% Shelf prices	09-10 Various Catalogs, $100 min. order, 5-7 days delivery, 15% shipping charges, no packing & handling charges, 20% restocking fee, no netpricer

**Please note that Woody's Sporting Goods was purchased by Barcelona Sporting Goods, and will be representing the Rio Grande Valley Division, beginning January 1, 2010, and the letters of renewal will be from Barcelona Sporting Goods.

EXHIBIT_____

EDINBURG CONSOLIDATED INDEPENDENT SCHOOL DISTRICT
PURCHASING DEPARTMENT
411 North 6th/DRAWER 990
EDINBURG, TEXAS 78541
PHONE: (956) 289-2311
FAX (956) 383-7687

August 3, 2010

A & L Athletics
2206 Primrose Bldg A
McAllen, TX 78504
Contact: Gilma Salinas

FAX: 956-682-8118

Dear Mrs. Salinas;

REF: REQUEST FOR INFORMATION - FOR CONTRACT RENEWAL
BID 10-08, VOLLEYBALL SUPPLIES

Our original bid specifications provided for an extension of the awarded contract if both parties agreed in writing on the extension and if the unit prices, discounts, terms and conditions remained the same as the cost for contract renewal. If accepted by the Edinburg CISD, the renewal contract will start October 1, 2010 through September 30, 2011.

We are interested in knowing whether your company will extend this contract for an additional year. ***If your renewal extension is accepted by the Edinburg CISD, this form will be signed and faxed back to your company to notify you of the renewed contract. The Edinburg CISD reserves the right to accept or reject the renewal of this contract and to bid out a new contract.***

Please call Soledad Schuller, Buyer at 956-289-2311, Ext. 2138 if you have any questions regarding this contract.

YES:_____, per original discounts, terms, and conditions.
Vendor Signature

NO:_____, I am not interested in extending my awarded contract.
Vendor Signature

Approved for Renewal:

_____
Edinburg CISD Date

EXHIBIT_____

EDINBURG CONSOLIDATED INDEPENDENT SCHOOL DISTRICT
PURCHASING DEPARTMENT
411 North 8th/DRAWER 990
EDINBURG, TEXAS 78541
PHONE: (956) 289-2311
FAX (956) 383-7687

August 3, 2010

Bill Guthrie
5701 W. Expressway 83
Harlingen, TX 78552
Contact: William J. Guthrie

FAX: 956-428-7074

Dear Mr. Guthrie;

REF: REQUEST FOR INFORMATION - FOR CONTRACT RENEWAL
BID 10-08, VOLLEYBALL SUPPLIES

Our original bid specifications provided for an extension of the awarded contract if both parties agreed in writing on the extension and if the unit prices, discounts, terms and conditions remained the same as the cost for contract renewal. If accepted by the Edinburg CISD, the renewal contract will start October 1, 2010 through September 30, 2011.

We are interested in knowing whether your company will extend this contract for an additional year. ***If your renewal extension is accepted by the Edinburg CISD, this form will be signed and faxed back to your company to notify you of the renewed contract. The Edinburg CISD reserves the right to accept or reject the renewal of this contract and to bid out a new contract.***

Please call Soledad Schuller, Buyer at 956-289-2311, Ext. 2138 if you have any questions regarding this contract.

YES: William J Guthrie, per original discounts, terms, and conditions.
Vendor Signature

NO:_____, I am not interested in extending my awarded contract.
Vendor Signature

Approved for Renewal:

_____
Edinburg CISD Date

EXHIBIT_____

EDINBURG CONSOLIDATED INDEPENDENT SCHOOL DISTRICT
PURCHASING DEPARTMENT
411 North 8th/DRAWER 990
EDINBURG, TEXAS 78541
PHONE: (956) 289-2311
FAX (956) 383-7687

August 3, 2010

Flaghouse
601 Flaghouse Drive
Hasbrouck Heights, NJ 07604
Contact: Tennille Dudley

FAX: 800-734-2193

Dear Mrs. Dudley;

REF: REQUEST FOR INFORMATION - FOR CONTRACT RENEWAL
BID 10-08, VOLLEYBALL SUPPLIES

Our original bid specifications provided for an extension of the awarded contract if both parties agreed in writing on the extension and if the unit prices, discounts, terms and conditions remained the same as the cost for contract renewal. If accepted by the Edinburg CISD, the renewal contract will start October 1, 2010 through September 30, 2011.

We are interested in knowing whether your company will extend this contract for an additional year. ***If your renewal extension is accepted by the Edinburg CISD, this form will be signed and faxed back to your company to notify you of the renewed contract. The Edinburg CISD reserves the right to accept or reject the renewal of this contract and to bid out a new contract.***

Please call Soledad Schuller, Buyer at 956-289-2311, Ext. 2138 if you have any questions regarding this contract.

Please put Flaghouse bid number 10GBTTTB on all purchase orders against this bid. thank you

YES:_____, per original discounts, terms, and conditions.
Vendor Signature

NO:_____, I am not interested in extending my awarded contract.
Vendor Signature

Approved for Renewal:

_____
Edinburg CISD Date

EXHIBIT_____

EDINBURG CONSOLIDATED INDEPENDENT SCHOOL DISTRICT
PURCHASING DEPARTMENT
411 North 8th/DRAWER 990
EDINBURG, TEXAS 78541
PHONE: (956) 289-2311
FAX (956) 383-7687

GREG LARSON SPORTS, INC.
PO Box 567
Brainerd, MN 56401
PH 800 950-3320
FAX 800 950-9301

August 3, 2010

GL Sports
P.O. BOX 567
Brainerd, MN 56401
Contact: Scott Sabyan

FAX: 800-950-9301

Dear Mr. Sabyan;

REF: REQUEST FOR INFORMATION - FOR CONTRACT RENEWAL
BID 10-08, VOLLEYBALL SUPPLIES

Our original bid specifications provided for an extension of the awarded contract if both parties agreed in writing on the extension and if the unit prices, discounts, terms and conditions remained the same as the cost for contract renewal. If accepted by the Edinburg CISD, the renewal contract will start October 1, 2010 through September 30, 2011.

We are interested in knowing whether your company will extend this contract for an additional year. ***If your renewal extension is accepted by the Edinburg CISD, this form will be signed and faxed back to your company to notify you of the renewed contract. The Edinburg CISD reserves the right to accept or reject the renewal of this contract and to bid out a new contract.***

Please call Soledad Schuller, Buyer at 956-289-2311, Ext. 2138 if you have any questions regarding this contract.

Harley Rothenberg, VP

YES: _____, per original discounts, terms, and conditions. (PER Fall 2010 Catalog)
Vendor Signature

NO: _____, I am not interested in extending my awarded contract.
Vendor Signature

Approved for Renewal:

_____
Edinburg CISD Date

EXHIBIT_____

EDINBURG CONSOLIDATED INDEPENDENT SCHOOL DISTRICT
PURCHASING DEPARTMENT
411 North 8th/DRAWER 990
EDINBURG, TEXAS 78541
PHONE: (956) 289-2311
FAX (956) 383-7687

August 3, 2010

Gopher Sports
P.O. BOX 998
Owatonna, MN 55060-0998
Contact: JoAnn Nagel

FAX: 800-451-4855

Dear Mrs. Nagel;

REF: REQUEST FOR INFORMATION - FOR CONTRACT RENEWAL
BID 10-08, VOLLEYBALL SUPPLIES

Our original bid specifications provided for an extension of the awarded contract if both parties agreed in writing on the extension and if the unit prices, discounts, terms and conditions remained the same as the cost for contract renewal. If accepted by the Edinburg CISD, the renewal contract will start October 1, 2010 through September 30, 2011.

We are interested in knowing whether your company will extend this contract for an additional year. ***If your renewal extension is accepted by the Edinburg CISD, this form will be signed and faxed back to your company to notify you of the renewed contract. The Edinburg CISD reserves the right to accept or reject the renewal of this contract and to bid out a new contract.***

Please call Soledad Schuller, Buyer at 956-289-2311, Ext. 2138 if you have any questions regarding this contract.

YES: Cheryl Green, per original discounts, terms, and conditions.
Vendor Signature
Please review attached letterhead for additional discount information

NO:_____, I am not interested in extending my awarded contract.
Vendor Signature

Approved for Renewal:

_____
Edinburg CISD Date

RECEIVED
AUG 11 2010
BY:_____

EXHIBIT_____

EDINBURG CONSOLIDATED INDEPENDENT SCHOOL DISTRICT
PURCHASING DEPARTMENT
411 North 8th/DRAWER 990
EDINBURG, TEXAS 78541
PHONE: (956) 289-2311
FAX (956) 383-7687

August 3, 2010

Leslie G.
6511 Mona Vista Drive
Houston, TX 77083
Contact: Leslie G. Meltzer

FAX: 281-933-3231

Dear Mrs. Meltzer;

REF: REQUEST FOR INFORMATION - FOR CONTRACT RENEWAL
BID 10-08, VOLLEYBALL SUPPLIES

Our original bid specifications provided for an extension of the awarded contract if both parties agreed in writing on the extension and if the unit prices, discounts, terms and conditions remained the same as the cost for contract renewal. If accepted by the Edinburg CISD, the renewal contract will start October 1, 2010 through September 30, 2011.

We are interested in knowing whether your company will extend this contract for an additional year. ***If your renewal extension is accepted by the Edinburg CISD, this form will be signed and faxed back to your company to notify you of the renewed contract. The Edinburg CISD reserves the right to accept or reject the renewal of this contract and to bid out a new contract.***

Please note: Prices ARE guaranteed thru VB Season!

Please call Soledad Schuller, Buyer at 956-289-2311, Ext. 2138 if you have any questions regarding this contract.

YES: Leslie G. Meltzer, per original discounts, terms, and conditions.
Vendor Signature

NO:_____, I am not interested in extending my awarded contract.
Vendor Signature

Approved for Renewal:

_____
Edinburg CISD Date

EXHIBIT_____

EDINBURG CONSOLIDATED INDEPENDENT SCHOOL DISTRICT
PURCHASING DEPARTMENT
411 North 8th/DRAWER 990
EDINBURG, TEXAS 78541
PHONE: (956) 289-2311
FAX (956) 383-7687

August 3, 2010

McAllen Sports
109 South 17th Street
McAllen, TX 78501
Contact: Joe Escamilla

FAX: 956-682-1394

Dear Mr. Escamilla;

REF: REQUEST FOR INFORMATION - FOR CONTRACT RENEWAL
BID 10-08, VOLLEYBALL SUPPLIES

Our original bid specifications provided for an extension of the awarded contract if both parties agreed in writing on the extension and if the unit prices, discounts, terms and conditions remained the same as the cost for contract renewal. If accepted by the Edinburg CISD, the renewal contract will start October 1, 2010 through September 30, 2011.

We are interested in knowing whether your company will extend this contract for an additional year. ***If your renewal extension is accepted by the Edinburg CISD, this form will be signed and faxed back to your company to notify you of the renewed contract. The Edinburg CISD reserves the right to accept or reject the renewal of this contract and to bid out a new contract.***

Please call Soledad Schuller, Buyer at 956-289-2311, Ext. 2138 if you have any questions regarding this contract.

YES: _____, per original discounts, terms, and conditions.
Vendor Signature

NO: _____, I am not interested in extending my awarded contract.
Vendor Signature

Approved for Renewal:

_____
Edinburg CISD Date

EXHIBIT_____

EDINBURG CONSOLIDATED INDEPENDENT SCHOOL DISTRICT
PURCHASING DEPARTMENT
411 North 6th/DRAWER 990
EDINBURG, TEXAS 78541
PHONE: (956) 289-2311
FAX (956) 383-7687

August 3, 2010

FAX: 813-621-7688

Pyramid School Products
6510 North 54th Street
Tampa, FL 33610-1908
Contact: Adrian Barton

Dear Mr. Barton;

REF: REQUEST FOR INFORMATION - FOR CONTRACT RENEWAL
BID 10-08, VOLLEYBALL SUPPLIES

Our original bid specifications provided for an extension of the awarded contract if both parties agreed in writing on the extension and if the unit prices, discounts, terms and conditions remained the same as the cost for contract renewal. If accepted by the Edinburg CISD, the renewal contract will start October 1, 2010 through September 30, 2011.

We are interested in knowing whether your company will extend this contract for an additional year. ***If your renewal extension is accepted by the Edinburg CISD, this form will be signed and faxed back to your company to notify you of the renewed contract. The Edinburg CISD reserves the right to accept or reject the renewal of this contract and to bid out a new contract.***

Please call Soledad Schuller, Buyer at 956-289-2311, Ext. 2138 if you have any questions regarding this contract.

✓ YES: Adrian Barton, per original discounts, terms, and conditions.
Vendor Signature

NO: _____, I am not interested in extending my awarded contract.
Vendor Signature

Approved for Renewal:

_____
Edinburg CISD Date

Pyramid School Products
6510 North 54th Street
Tampa, Florida 33610-1908
(AC 813) 621-6446
(Toll Free) 800-792-2644
(Fax) 813-621-7688

EXHIBIT_____

EDINBURG CONSOLIDATED INDEPENDENT SCHOOL DISTRICT
PURCHASING DEPARTMENT
411 North 8th/DRAWER 990
EDINBURG, TEXAS 78541
PHONE: (956) 289-2311
FAX (956) 383-7687

August 3, 2010

Riddell
6846 Alamo Downs Pkwy
San Antonio, TX 78238
Contact: Robin Campbell

FAX: 210-684-4744

Dear Mrs. Campbell;

REF: REQUEST FOR INFORMATION - FOR CONTRACT RENEWAL
BID 10-08, VOLLEYBALL SUPPLIES

Our original bid specifications provided for an extension of the awarded contract if both parties agreed in writing on the extension and if the unit prices, discounts, terms and conditions remained the same as the cost for contract renewal. If accepted by the Edinburg CISD, the renewal contract will start October 1, 2010 through September 30, 2011.

We are interested in knowing whether your company will extend this contract for an additional year. ***If your renewal extension is accepted by the Edinburg CISD, this form will be signed and faxed back to your company to notify you of the renewed contract. The Edinburg CISD reserves the right to accept or reject the renewal of this contract and to bid out a new contract.***

Please call Soledad Schuller, Buyer at 956-289-2311, Ext. 2138 if you have any questions regarding this contract.

YES: Robin Campbell-Hotchkiss per original discounts, terms, and conditions.
Vendor Signature

NO:_____, I am not interested in extending my awarded contract.
Vendor Signature

Approved for Renewal:

_____
Edinburg CISD Date

EXHIBIT_____

EDINBURG CONSOLIDATED INDEPENDENT SCHOOL DISTRICT
PURCHASING DEPARTMENT
411 North 8th/DRAWER 990
EDINBURG, TEXAS 78541
PHONE: (956) 289-2311
FAX (956) 383-7687

August 3, 2010

S & S Worldwide
75 Mill Street
Colchester, CT 06415
Contact: Muriel T. Barnes

FAX: 800-432-2842

Dear Mr. Barnes;

REF: REQUEST FOR INFORMATION - FOR CONTRACT RENEWAL
BID 10-08, VOLLEYBALL SUPPLIES

Our original bid specifications provided for an extension of the awarded contract if both parties agreed in writing on the extension and if the unit prices, discounts, terms and conditions remained the same as the cost for contract renewal. If accepted by the Edinburg CISD, the renewal contract will start October 1, 2010 through September 30, 2011.

We are interested in knowing whether your company will extend this contract for an additional year. ***If your renewal extension is accepted by the Edinburg CISD, this form will be signed and faxed back to your company to notify you of the renewed contract. The Edinburg CISD reserves the right to accept or reject the renewal of this contract and to bid out a new contract.***

Please call Soledad Schuller, Buyer at 956-289-2311, Ext. 2138 if you have any questions regarding this contract.

YES: Muriel T. Barnes, per original discounts, terms, and conditions.
Vendor Signature

NO:_____, I am not interested in extending my awarded contract.
Vendor Signature

Approved for Renewal:

_____
Edinburg CISD Date

EXHIBIT_____

EDINBURG CONSOLIDATED INDEPENDENT SCHOOL DISTRICT
PURCHASING DEPARTMENT
411 North 8th/DRAWER 990
EDINBURG, TEXAS 78541
PHONE: (956) 289-2311
FAX (956) 383-7687

August 3, 2010

Southern Athletic Supply
5828 Broadway
Pearland, TX 77581
Contact: James Novak

FAX: 281-485-1679

Dear Mr. Novak;

REF: REQUEST FOR INFORMATION - FOR CONTRACT RENEWAL
BID 10-08, VOLLEYBALL SUPPLIES

Our original bid specifications provided for an extension of the awarded contract if both parties agreed in writing on the extension and if the unit prices, discounts, terms and conditions remained the same as the cost for contract renewal. If accepted by the Edinburg CISD, the renewal contract will start October 1, 2010 through September 30, 2011.

We are interested in knowing whether your company will extend this contract for an additional year. ***If your renewal extension is accepted by the Edinburg CISD, this form will be signed and faxed back to your company to notify you of the renewed contract. The Edinburg CISD reserves the right to accept or reject the renewal of this contract and to bid out a new contract.***

Please call Soledad Schuller, Buyer at 956-289-2311, Ext. 2138 if you have any questions regarding this contract.

YES: _____, per original discounts, terms, and conditions.
Vendor Signature

NO: _____, I am not interested in extending my awarded contract.
Vendor Signature

Approved for Renewal:

_____
Edinburg CISD Date

EXHIBIT_____

EDINBURG CONSOLIDATED INDEPENDENT SCHOOL DISTRICT
PURCHASING DEPARTMENT
411 North 8th/DRAWER 990
EDINBURG, TEXAS 78541
PHONE: (956) 289-2311
FAX (956) 383-7687

August 3, 2010

Sport Imports, Inc.
P.O. BOX 21040
Columbus, OH 43221
Contact: Rob Ebright

FAX: 614-771-0750

Dear Mr. Ebright;

REF: REQUEST FOR INFORMATION - FOR CONTRACT RENEWAL
BID 10-08, VOLLEYBALL SUPPLIES

Our original bid specifications provided for an extension of the awarded contract if both parties agreed in writing on the extension and if the unit prices, discounts, terms and conditions remained the same as the cost for contract renewal. If accepted by the Edinburg CISD, the renewal contract will start October 1, 2010 through September 30, 2011.

We are interested in knowing whether your company will extend this contract for an additional year. ***If your renewal extension is accepted by the Edinburg CISD, this form will be signed and faxed back to your company to notify you of the renewed contract. The Edinburg CISD reserves the right to accept or reject the renewal of this contract and to bid out a new contract.***

Please call Soledad Schuller, Buyer at 956-289-2311, Ext. 2138 if you have any questions regarding this contract.

YES:_____, per original discounts, terms, and conditions.
Vendor Signature

NO:_____, I am not interested in extending my awarded contract.
Vendor Signature

Approved for Renewal:

_____
Edinburg CISD Date

EXHIBIT_____

EDINBURG CONSOLIDATED INDEPENDENT SCHOOL DISTRICT
PURCHASING DEPARTMENT
411 North 8th/DRAWER 990
EDINBURG, TEXAS 78541
PHONE: (956) 289-2311
FAX (956) 383-7687

CY
38513

August 3, 2010

Sport Supply dba/BSN/Collegiate Pacific
P.O. BOX 7726
Dallas, TX 75209
Contact: John Stafford

FAX: 800-365-7653

Dear Mr. Stafford;

REF: REQUEST FOR INFORMATION - FOR CONTRACT RENEWAL
BID 10-08, VOLLEYBALL SUPPLIES

Our original bid specifications provided for an extension of the awarded contract if both parties agreed in writing on the extension and if the unit prices, discounts, terms and conditions remained the same as the cost for contract renewal. If accepted by the Edinburg CISD, the renewal contract will start October 1, 2010 through September 30, 2011.

We are interested in knowing whether your company will extend this contract for an additional year. ***If your renewal extension is accepted by the Edinburg CISD, this form will be signed and faxed back to your company to notify you of the renewed contract. The Edinburg CISD reserves the right to accept or reject the renewal of this contract and to bid out a new contract.***

Please call Soledad Schuller, Buyer at 956-289-2311, Ext. 2138 if you have any questions regarding this contract.

JOHN STAFFORD
Bid Specialist
jstafford@sportsupp . .com

I've enclosed latest exception list

YES: _____, per original discounts, terms, and conditions. .
Vendor Signature

NO: _____, I am not interested in extending my awarded contract.
Vendor Signature

Approved for Renewal:

_____
Edinburg CISD Date

Sport Supply Group, Inc.
dba BSN Sports/Collegiate Pacific
PO Box 7726
Dallas, TX 75209

EXHIBIT_____

EDINBURG CONSOLIDATED INDEPENDENT SCHOOL DISTRICT
PURCHASING DEPARTMENT
411 North 8th/DRAWER 990
EDINBURG, TEXAS 78541
PHONE: (956) 289-2311
FAX (956) 383-7687

August 3, 2010

Team Sports of Texas
P.O. BOX 320
Victoria, TX 77902
Contact: Craig Hale

FAX: 361-575-8219

Dear Mr. Hale;

REF: REQUEST FOR INFORMATION - FOR CONTRACT RENEWAL
BID 10-08, VOLLEYBALL SUPPLIES

Our original bid specifications provided for an extension of the awarded contract if both parties agreed in writing on the extension and if the unit prices, discounts, terms and conditions remained the same as the cost for contract renewal. If accepted by the Edinburg CISD, the renewal contract will start October 1, 2010 through September 30, 2011.

We are interested in knowing whether your company will extend this contract for an additional year. ***If your renewal extension is accepted by the Edinburg CISD, this form will be signed and faxed back to your company to notify you of the renewed contract. The Edinburg CISD reserves the right to accept or reject the renewal of this contract and to bid out a new contract.***

Please call Soledad Schuller, Buyer at 956-289-2311, Ext. 2138 if you have any questions regarding this contract.

YES:_____, per original discounts, terms, and conditions.
Vendor Signature

NO:_____, I am not interested in extending my awarded contract.
Vendor Signature

Approved for Renewal:

_____
Edinburg CISD Date

EXHIBIT_____

EDINBURG CONSOLIDATED INDEPENDENT SCHOOL DISTRICT
PURCHASING DEPARTMENT
411 North 8th/DRAWER 990
EDINBURG, TEXAS 78541
PHONE: (956) 289-2311
FAX (956) 383-7687

August 3, 2010

Top Sox
6511 Mona Vista Drive
Houston, TX 77083
Contact: Leslie G. Meltzer

FAX: 281-933-3231

Dear Mrs. Meltzer;

REF: REQUEST FOR INFORMATION - FOR CONTRACT RENEWAL
BID 10-08, VOLLEYBALL SUPPLIES

Our original bid specifications provided for an extension of the awarded contract if both parties agreed in writing on the extension and if the unit prices, discounts, terms and conditions remained the same as the cost for contract renewal. If accepted by the Edinburg CISD, the renewal contract will start October 1, 2010 through September 30, 2011.

We are interested in knowing whether your company will extend this contract for an additional year. ***If your renewal extension is accepted by the Edinburg CISD, this form will be signed and faxed back to your company to notify you of the renewed contract. The Edinburg CISD reserves the right to accept or reject the renewal of this contract and to bid out a new contract.***

Please call Soledad Schuller, Buyer at 956-289-2311, Ext. 2138 if you have any questions regarding this contract.

YES: Leslie G. Meltzer, per original discounts, terms, and conditions.
Vendor Signature

NO:_____, I am not interested in extending my awarded contract.
Vendor Signature

Approved for Renewal:

_____
Edinburg CISD Date

EXHIBIT_____

EDINBURG CONSOLIDATED INDEPENDENT SCHOOL DISTRICT
PURCHASING DEPARTMENT
411 North 8th/DRAWER 990
EDINBURG, TEXAS 78541
PHONE: (956) 289-2311
FAX (956) 383-7687

August 3, 2010

Underdog Sports, Inc.
2430 Avenue K
Plano, TX 75074
Contact: Tom Trieu

FAX: 972-424-1813

Dear Mr. Trieu;

REF: REQUEST FOR INFORMATION - FOR CONTRACT RENEWAL
BID 10-08, VOLLEYBALL SUPPLIES

Our original bid specifications provided for an extension of the awarded contract if both parties agreed in writing on the extension and if the unit prices, discounts, terms and conditions remained the same as the cost for contract renewal. If accepted by the Edinburg CISD, the renewal contract will start October 1, 2010 through September 30, 2011.

We are interested in knowing whether your company will extend this contract for an additional year. ***If your renewal extension is accepted by the Edinburg CISD, this form will be signed and faxed back to your company to notify you of the renewed contract. The Edinburg CISD reserves the right to accept or reject the renewal of this contract and to bid out a new contract.***

Please call Soledad Schuller, Buyer at 956-289-2311, Ext. 2138 if you have any questions regarding this contract.

YES: _____, per original discounts, terms, and conditions.
Vendor Signature

NO: _____, I am not interested in extending my awarded contract.
Vendor Signature

Approved for Renewal:

_____
Edinburg CISD Date

FAXED

08-03-10P04:00

EXHIBIT_____

EDINBURG CONSOLIDATED INDEPENDENT SCHOOL DISTRICT
PURCHASING DEPARTMENT
411 North 8th/DRAWER 990
EDINBURG, TEXAS 78541
PHONE: (956) 289-2311
FAX (956) 383-7687

August 3, 2010

Barcelona Sporting Goods
6702 Luckenbach Ln.
Austin, TX 78729
Contact: Tommy Stallworth

FAX: 956-797-5011

Dear Mr. Stallworth;

REF: REQUEST FOR INFORMATION - FOR CONTRACT RENEWAL
BID 10-08, VOLLEYBALL SUPPLIES

Our original bid specifications provided for an extension of the awarded contract if both parties agreed in writing on the extension and if the unit prices, discounts, terms and conditions remained the same as the cost for contract renewal. If accepted by the Edinburg CISD, the renewal contract will start October 1, 2010 through September 30, 2011.

We are interested in knowing whether your company will extend this contract for an additional year. ***If your renewal extension is accepted by the Edinburg CISD, this form will be signed and faxed back to your company to notify you of the renewed contract. The Edinburg CISD reserves the right to accept or reject the renewal of this contract and to bid out a new contract.***

Please call Soledad Schuller, Buyer at 956-289-2311, Ext. 2138 if you have any questions regarding this contract.

YES: _____, per original discounts, terms, and conditions.
Vendor Signature

NO: _____, I am not interested in extending my awarded contract.
Vendor Signature

Approved for Renewal:

_____
Edinburg CISD Date

EXHIBIT_____

APPROVAL OF BID 10-178, INSTRUCTIONAL MATERIALS

Superintendent's Recommendation

That the Board of Trustees approve the recommendation to accept the term bid for Instructional Materials, which is indicated in the attached bid tabulation as being the most favorable and advantageous to the Edinburg CISD.

Rationale

The administration sought competitive sealed bids for the Instructional Materials. Bid opening was held at the Business Office Building on August 28, 2009, at 3:00 P.M. two hundred and fifty three (253) proposals were opened. Instructional Materials are used by all grade levels and departments to aid in quality instruction to the students and in staff development in training teachers.

User Department

This item was requested by Mrs. Maria Luisa Guerra, Assistant Superintendent for Instruction & Support Services.

Budgetary Information

Approximate Total Award Recommendation **$2,900,000.00**

Account	Description	Appropriations	Encumbrance	Expenditure	Balance
XXX-XX-6399-XX-XXX-1XXXXX	General Supplies	7,400,876.00	0.00	0.00	7,400,876.00
	TOTAL	**7,400,876.00**	**0.00**	**0.00**	**7,400,876.00**

Resource Personnel

Dr. René Gutiérrez
Maria Luisa Guerra
Rigoberto V. Abrego
Amaro Tijerina
Sylvia D. Garcia
Jacqueline Kingan

Board Policy Reference

This is in accordance with the Board Policy CH, Purchasing Law Bidding Requirements.

Approved by: _____
Maria Luisa Guerra, Asst. Supt. For Instruction/Support Serv.

Within Budgetary Allocations: _____
Sylvia D. Garcia, Director for Finance

Approved by: _____
Rigoberto V. Abrego, Asst. Supt. For Finance/Operations

Recommended by: _____
Dr. René Gutiérrez, Superintendent of Schools

EXHIBIT_____PAGE(S)_____

Notes for Bid Tabulation
Bid 10-178, INSTRUCTIONAL MATERIALS
September 14, 2010

1. **USER DEPARTMENT**: This bid was requested by Assistant Superintendent for Instruction & Support. Mrs. Maria Luisa Guerra will be present to answer any detailed questions regarding this bid.

2. **TYPE OF BID**: This is a term bid beginning September 15, 2010 or soon thereafter and ending August 31, 2011. This contract may be renewed for an additional TERM CONTRACT PERIOD if the vendor and the Edinburg CISD agree and no increases in cost are incurred except for the growth of the district.

3. **BID EVALUATION**: This bid was evaluated by a committee of District Specialists and Special Education; Yvonne Chapa, Fernando Rosa, Max Ceballos, Irma Villarreal, Irene D. Valdez, and Linda Hernandez. Final recommendations to the board are done by the Superintendent of Schools.

4. **ORDERING INFORMATION**: Each campus and department will prepare purchase orders on an as needed basis following Board of Trustee approval.

5. **APROXIMATE AMOUNT SPENT LAST YEAR: $2,920,000.00**

6. **AWARD RECOMMENDATION:**

Administration recommends awarding this bid to FIFTEEN primary vendors. This Instructional Materials bid is for all subjects. **You are required to order from the Primary vendors first. Items not available through the primary vendors may be purchased from vendors in the approved vendor list. All orders over $10,000.00 require three quotes.**

PRIMARY VENDORS		
VENDORS	**DISCOUNTS**	**NOTES**
Attainment Company P.O. Box 930160 Verona, WI 53593-0160 Contact: Brent Dena PH: 800-327-4269 FAX: 800-942-3865	0%	Net Pricer – No Delivery time – 6 days Minimum order - $1.00 Shipping – 5% Restocking fee – No
Barnes & Noble Booksellers 4005 North 10th Street McAllen, TX 78504 Contact: Maria Florez PH: 956-683-7773 FAX: 956-683-7710	20 to 25%	Net Pricer – No Delivery time – 3 business days, if in stock Minimum order – No Shipping fee – No, unless rush shipments Restocking fee – No
Borders, Inc. 100 Phoenix Drive Ann Arbor, MI 48108 Contact: Morgan Schlicker PH: 800-243-7510 ext 1231 FAX: 734-477-1356	0 to 25% Contact vendor	Net Pricer – No Delivery time – 3 business expedited shipping charge Minimum order – No Shipping – up to $4.50/carton (det, by weight) Restocking fee - No
Discount Dictionaries 5917 Oak Ave. #359 Temple City, CA 91780 Contact: Arthur Chou PH: 877-641-0341 FAX: 626-628-3249	0%	Net Pricer – Yes Delivery time 7-10 work days No Minimum order Shipping 10% of order – Free shipping on 100 + books Restocking fee – No

EXHIBIT_____

PRIMARY VENDORS		
VENDORS	**DISCOUNTS**	**NOTES**
Flinn Scientific, Inc P.O. Box 219 Batavia. IL 60510 Contact: Jim Nesbit PH: 800-452-1261 FAX: 866-452-1436	10% **Reference number 78092**	Net Pricer – Yes Delivery time – 3 to 5 days Minimum order – No Shipping – No Restocking fee – No
Gateway Printing & Office Supply, Inc. 315 South Schunior Edinburg, TX 78539 Contact: Burch Shook PH: 956-383-3861 FAX: 956-383-4674	28%	Net Pricer – Yes (Upon request) Delivery time – 3 business days Minimum order – No Shipping No Restocking fee – No
Nasco 901 Janesville Ave. P.O. Box 901 Fort Atkinson, WI 53538-0901 Contact: Dave Johnason PH: 800-558-9595 FAX: 920-563-8296	10 to 20% Contact vendor **Reference Number 53963**	Net Pricer – Yes Delivery time 7 to 21 days Minimum order – $50.00 Shipping – Free except for live or hazardous material and items with a "Z" or "KM" prefix Restocking – No
National Educational Systems 6333 De Zavala Road, Ste 106 San Antonio, TX 78299 Contact: Jose H. Atkinson PH: 800-231-4380 FAX: 210-699-4674	10%	Net Pricer – No Delivery time – Did not fill in Minimum order – $150.00 Shipping – No Restocking fee – 20% plus freight
Pearson Clinical Assessment 19500 Bulverde Road San Antonio, TX 78259 Contact: Michael Flynn PH: 800-627-7271 FAX: 800-232-1223	0% **Reference Number BP1**	Net Pricer – No Delivery time – Did not specify Minimum order – No Shipping Under $500.00 8% (minimum $10.00) $500.00 to $2,499.00 – 5% $2,500.00 plus – 4% Restocking fee – No
Sargent –Welch /VWR 3850 North Wilke Rd, Suite 300 Arlinton Heights, IL 60004 PH; 847-463-1180 FAX: 800-814-0607	25% on Scienc Supplies & Equipment	Net Pricer – No Delivery time 7-30 days Minimum order – No Shipping Items price ending "9" Shipped at cat net price. Orders Over $200 ship free Restocking fee sometimes
Dba Science Kit 777 East Park Drive PO Box 5003 Tonawanda, NY 14151 Contact: Trisha E. Henderson PH: 800-828-7777 FAX: 800-828-3299	15% orders over $200 except Live, preserved, telescopes, special orders, Vernier probeware, Kodak cameras, Pasco Items & Publisher kits & parts **REFERENCE # SE01176**	Net Pricer – No Delivery time 7-10 days Minimum order – No Shipping fee on live materials, hazardous materials, motor freight is 12% on total order Restocking fee – 12%
Social Studies School Service 10200 Jefferson Blvd. Culver City, CA 90232 Contact: Matthew Kraus PH: 800-421-4246 FAX: 800-944-5432	0%	Net Pricer – No Delivery time 10-20 days Minimum order – No Shipping 12% min $4.00 Restocking fee – No

EXHIBIT_____

PRIMARY VENDORS		
VENDORS	**DISCOUNTS**	**NOTES**
Super Duper, Inc 5201 Pelham Road Greenville, SC 29615 Contact: Belinda Shorts PH: 800-277-8737 FAX: 800-978-7379	0% **REFERENCE # Z10178**	Net Pricer – No Delivery time 7-10 Bus days Minimum order $20 Shipping – No Restocking - No
Teacher Created Materials 5301 Oceanus Drive Huntington Beach, CA 92649 Contact: Richard Levitt PH: 800-858-7339 FAX: 888-877-7606	0%	Net Pricer – No Delivery time – 3 to 5 business days Minimum order – No Shipping fee – $0 to $249.99 – 15% of order $249.99 up – 10% of order Restocking fee – No
Voyager Expanded Learning, dba Cambium Learning Voyager **(SEE CAMBIUM LEARNING)**	**Reference Number FEIN 38-3724764 for Voyager only**	

APPROVED VENDORS		
VENDORS	**DISCOUNTS**	**NOTES**
A.W. Peller & Associates, Inc 344 Wagaraw Road Hawthorne, NJ 07507 Contact: Neil Peller PH: 800-451-7450 FAX: 973-423-5569	0%	Net Pricer – Yes Delivery time – 10 days No minimum order Shipping 10% or $7.99 minimum Restocking fee - No
Abecedarian P.O. Box 92843 Austin, TX 78709-2843 Contact: Ursula Jackson PH: 800-342-1165 FAX: 512-233-2689	0%	Net Pricer – No Delivery time – 3 days No minimum order Shipping Up to $70.00 - $7.00 $70.01 to $1499.99 – 10% Over $1500.00 – 5% Restocking fee - No
AbleNet 2808 Fairview Ave. N Roseville, MN 55113 Contact: Paul L. Sugden PH: 800-322-0956 FAX: 651-294-2222	0%	Net Pricer – No Delivery time - 3 days with extra cost No minimum order Shipping $0 to $49.00 - $10.00 $50.00 to $99.00 - $15.00 $100.00 to $249.00 - $18.00 $250.00 to $499.00 - $25.00 $500.00 and up – 6% of subtotal Restocking fee – None if returned in 30 days (Otherwise call for quote)
ACE Educational Supplies 5595 S. University Drive Davie, FL 33328 Contact: Richard Ludwig PH: 800-432-0213 FAX: 800-865-5564	10%	Net Pricer – No Delivery Time – 3 days Minimum order - $50.00 Shipping – add 20% to only Items with shipping symbol Restocking fee - No

EXHIBIT_____

APPROVED VENDORS		
VENDORS	**DISCOUNTS**	**NOTES**
Aims Education Foundation P.O. Box 8120 Fresno, CA 93747 Contact: Carol Shaner PH: 888-733-2467 FAX: 559-255-6396	0%	Net Pricer – No Delivery time – 4 days after receipt of P.O. No minimum order Shipping Up to $60.00 - $6.00 $60.00 to $100.00 – 10% $100.01 to$250.00 – 8% $250.01 and up – 6% Restocking fee - No
American Book Company P.O. Box 2638 Woodstock, GA 30188 Contact: Devin Pintozzi PH: 888-264-5877 FAX: 866-827-3240	0%	Net Pricer – Yes Delivery time – 3 to 5 days 10 books per title minimum order Shipping – 12% Restocking fee 15% on large orders
American Eagle Dba: Teacher's Discovery 2711 Paldan Drive Auburn, MI 48326 Contact: Donna Hosner PH: 800-832-2437 FAX: 800-287-4509	0%	Net Pricer – No Delivery time – 7 to 10 business days Minimum order – No Shipping – 12% of total Restocking fee - No
American Reading Company 201 South Gulph Road King of Prussia, PA 19406 Contact: Allan Struzinski PH: 866-810-2665 FAX: 610-992-4156	0%	Net Pricer – Yes Delivery time – 2 to 6 weeks No minimum order Shipping – No Restocking fee - No
AnsMar Publishers, Inc. 13257 Kirkham Way Poway, CA 92064-7116 Contact James Stark PH: 866-866-7026 FAX: 858-513-2764	0%	Net Pricer – No Delivery time – 3 business days Minimum order – did not fill in Shipping – 10% Restocking fee – 10%
A.I.H. Curriculum Concepts (Art in History) 200 Willis Drive Stockbridge, GA 30281 Contact: Phillip Mikula PH: 866-278-5481 FAX: 770-507-9008	0%	Net Pricer – No Delivery time 3 days No minimum order Shipping – 7.5% Restocking fee – 15%
Apex Learning 1215 Fourth Ave, Ste 1500 Seattle, WA 98161 Contact: Cynthia Rogan PH: 800453-1454 FAX: 206-381-5601	Tiered discounts based on implementation size and pre-payment of multiyear contracts	Net Pricer – No Delivery time – 30 days Minimum order - $500.00 Shipping charge – No Restocking fee – No
Applied Practice, Ltd. 3519 Cedar Springs Rd. Ste. A Contact; Meri Ferrell PH: 866-374-3768 FAX: 866-897-6137	0%	Net Pricer – No Delivery Time – 3 to 5 days Minimum order – No Shipping – 15% Restocking fee - $12.00 per item
Assessment Services, Inc. P.O. Box 117 Pepperell, MA 01463 Contact: Grant Gardner PH: 800-425-4370 FAX: 978-383-0400	5% Math 20% Science	Net Pricer – No Delivery time – 7 to 10 days Minimum order - $15.00 Shipping Under $100.00 standard Shipping charger Over $100.00 ship free Restocking fee - No

EXHIBIT_____

APPROVED VENDORS		
VENDORS	**DISCOUNTS**	**NOTES**
At Ease Inc. 7672 Montgomery Rd. Cincinnati, OH 45236 Contact: Ann Marie Sabath PH: 800-873-9909 FAX: 513-241-8701	0%	Net Pricer – No Delivery time – Some orders may be backordered Minimum order – No Shipping - $7.50 per order Restocking fee – No
Audio Visual Aids Corp. 2903 N. Flores Street San Antonio, TX 78212 Contact: Chris Thompson PH: 800-422-1282 FAX: 800-854-8140	Catalog prices reflect varied discounts up to 81.25% off M.S.R.P.	Net Pricer – Yes Delivery time – 3 business days Minimum oreder – No Shipping – Free freight on Items weighing less than 50 lbs. Restocking fee – 15% on special orders
B.E. Publishing P.O. Box 8558 Warwick, RI 02888 Contact: Colleen Cooney PH: 888-781-6921 FAX: 401-781-7608	5%	Net Pricer – No Delivery time – 7 to 10 days Minimum order – Textbook (min or 5) Shipping – 85% Restocking fee – No
Baker & Taylor, Inc. 2550 West Tyvola Rd. Ste 300 Charlotte, NC 28217 Contact: Lee Ann Queen PH: 800-775-1800 FAX: 704-998-3260	0 to 40% Contact vendor	Net Pricer – Yes Delivery time – 3 business days Minimum order – No Shipping fee – No Restocking fee – No
Ballard & Tighe Publishers 471 Atlas Street Brea, CA 92821 Contact: Mancie Lafferty PH: 800-321-4332 FAX: 714-255-9828	0% See catalog for selected discounts	Net Pricer – No Deliver time – 5 to 7 week days Minimum order – No Shipping – 7-1/2% of total order Restocking fee – No
Better Learning 320 E. Ebony Lane Edinburg, TX 78539 Contact: Guadalupe Rios, Jr. PH: 956-381-0363 FAX: None	0%	Net Pricer – No Deliver time – As soon as print shop delivers Minimum order – varies, call vendor Shipping fee – No Restocking fee – 10%
Bio Corporation 3910 Minnosota Alexandra, MN 56308 Contact: Rebacca Hedstrom PH: 800-222-9094 FAX: 800-332-9094	5%	Net Pricer – No Delivery time – 14 days Minimum order - $250.00 Shipping – On pail packing, live, tables, stools Restocking fee - No
Books Are Fun 604 Lynn Drive Edinburg, TX 78539 Contact: Noel Ledesma PH: 956-457-5265 FAX: 956-289-1964	0%	Net Pricer – No Delivery time – 3 business days Minimum order – No Shipping fee – No Restocking fee – No
Boulden Publishing P.O. Box 1186 Weaverville, CA 96093 Contact: Ken Harrison PH: 800-238-8433 FAX: 530-623-5525	0%	Net Pricer – Did not fill in Delivery time – 7 to 10 days Minimum order – No Shipping – Min. $7.95 or 10% of order Restocking fee - No

EXHIBIT_____

APPROVED VENDORS		
VENDORS	**DISCOUNTS**	**NOTES**
Brightpoint Literacy P.O. Box 8148 Saddle Brook, NJ 07663 Contact: Virginia Tanaka PH: 888-424-8398 FAX: 201-712-0046	0%	Net Pricer – Yes Delivery time – 7 to 14 business days Minimum order – No Shipping Up to $49.99 - $5.00 $50.00 to $2,499.oo – 9% $2,500.00 to $4,999.00 – 8% $5,000.00 to $9,999.00 – 7% $10,000.00 to $20,000.00 – 5% Restocking fee - No
Brodhead Garrett 100 Paragon Parkway Mansfield, OH 44903 Contact: Douglas A. Barad PH: 800-321-6730 FAX: 800-232-8776	10% **Contract # 2010235022ss-CTE**	Net Pricer – No Delivery time – 5 to 45 days Minimum order – No Shipping Minimum $7.95 15% after applicable discount Restocking fee – Varies Contact vendor
Brook Mays Music 8605 Carpenter Frwy Dallas, TX 75247 Contact: Bill Everitt PH: 800-637-8966 FAX: 214-905-5031	0%	Net Pricer – Yes Delivery time 10 days Minimum order – No Shipping – No Restocking – 20%
Buckle Down Publishing 136 Madison Ave, 8th Floor New York, NY 10016 Contact: Allison Leff PH: 800-776-3454 FAX: 877-365-0111	0%	Net Pricer – No Delivery time 7-10 Bus days Minimum order – No Shipping 0 to $100.99 = $10.99 $101 to $500.99 = $5.99 $501 + add 10% of subtotal Restocking fee - No
Budgetext Cor[oration 1936 N. Shiloh Drive Fayetteville, AR 72702 Contact: Rob Cardell PH: 888-888-2272 FAX: 800-642-26658	3% New Condition Classic Literature & Reference Materials 5% Quality Reconditioned Textbooks	Net Pricer – Yes Delivery time 7 to 14 days Minimum order – No Shipping – No Restocking fee – No
Bureau for At Risk Youth 303 Crossways Park Drive Woodbury, NY 11797 Contact: Diane Baur PH: 800-999-6884 FAX: 800-262-1886	0%	Net Pricer – No Delivery time 10 days Minimum order – No Shipping 10% min $6.95 Restocking fee – No
CaDan Computers **(SEE TECHNOLOGY FOR EDUCATION)**		
Callaway House, Inc. 451 Richardson Drive Lancaster, PA 17603 Contact: Sharon L Markus PH: 800-233-0290 FAX: 717-299-6754	0%	Net Pricer – No Delivery time 7 to 10 Business days Minimum order – No Shipping Up to $25.00 - $7.95 $25.01 to $50.00 - $9.95 $50.01 to $75.00 - $12.95 $75.01 to $100.00 - $15.95 $100.01 to $200.00 - $17.95 $200.01 to $750.00 – 10% Over $750.00 - Free Restocking fee – No

EXHIBIT_____

APPROVED VENDORS		
VENDORS	**DISCOUNTS**	**NOTES**
Cambium Learning, Inc. 4185 Salazar Way Frederick, CO 80504 Contact: Erin Famsey PH: 800-547-6747 FAX: 888-819-7767	0% **Reference Number** **FEIN #45-0525540**	Net Pricer – No Delivery time – 9 to 12 Business days Minimum order – No Shipping fee $1.00 to $99.99 – 12% ($4.00 Minimum) $100.00 to $99,999.99 – 10% $100,000.00 to $249,999.99 8% $250,000.00 to $499,999.99 6% $500,000.00 to 1 million – 5% Over 1 million – 4% Restocking fee – 15% after 30 days
Capstone Publuishers 151 Good Counsel Drive P.O. Box 669 Mankato, MN 56002-0669 Contact: Connie Ruyter PH: 800-747-4992 FAX: 888-262-0705	25% Off list price	Net Pricer – Yes Deliver time – 7 to 10 days Minimum order – No Shipping Free on orders of 25 books 10% on orders of 24 books or less Restocking fee – No
Career Development Software 5305 E. 18th Street, #141 Vancouver, WA 98661 Contact: Mary Goodnight PH: 800-543-0998 FAX: 800-518-2514	0 to 10% Contact vendor	Net Pricer – No Delivery time – 3 days if in warehouse Minimum order - $10.00 Shipping – 6 to 10%, Minimum $8.50 Restocking fee – No
Carlex 1545 W. Hamlin Road Rochester Hills, MI 48309 Contact: Megan Larnee PH: 800-526-3768 FAX: 248-852-7142	0%	Net Pricer – Yes Delivery time – 3 to 5 business days Minimum order – No Shipping Up to $25.00 - $4.95 $25.01 to %50.00 - $5.95 $50.01 to $75.00 - $7.25 $75.01 to $100.00 - $8.95 $100.01 and over – 10% Restocking fee - No
Carolina Biological Supply Co. Burlington, NC 27215 Contact: Elizabeth J. Stanfield PH: 800-334-5551 FAX: 336-538-6330	5% **Reference Number** **111069-SQ**	Net Pricer – No Delivery time – Fed-ex shipping Minimum order – No Shipping – Contact vendor Restocking fee – No
Cengage Learning, Inc. 5191 Natrop Blvd. Mason, OH 45040 Contact: Patricia E. Brandt PH: 800-543-0487 FAX: 513-229-1017	0%	Net Pricer – Yes Delivery time – 3 days expedited charge Minimum order – No Shipping – Approximately 4% Restocking fee - No
Center for Civic Education 5145 Douglas Fir Road Calabasas, CA 91302-1440 Contact: John Hale PH: 800-350-4223 FAX: 818-591-9330	0%	Net Pricer – No Delivery time – 7 days Minimum order – No Shipping - 12% of total order Restocking fee – 15%

EXHIBIT_____

APPROVED VENDORS		
VENDORS	**DISCOUNTS**	**NOTES**
Charles A. Dana Center (The) 1616 Guadalupe Street, Ste 3.206 Austin, TX 78701-1222 Contact: Richard P. Blount PH: 512-471-6190 FAX: 512-232-1855	0%	Net Pricer – No Delivery time – 3 days Minimum order - $0.01 Shipping $0.01 to $50.00 - $8.50 $50.01 to $100.00 - $13.50 $100.01 to $250.00 - $19.50 $250.01 and up – 8% of total Restocking fee – No (does not accept returns)
Charlesbridge Publishing Inc. 85 Main Street Watertown, MA 02472 Contact: Jessica Russell PH: 800-225-3214 FAX: 800-926-5775	0%	Net Pricer – No Delivery time – 7 to 10 days Minimum order – No Shipping – 10% of total Minimum of $4.50 Restocking fee – No
Cheryl Cox Educational Consultants P.O. Box 452142 Garland, TX 75045 PH: 214-221-4322 FAX: 214-221-4324	5%	Net Pricer – No Delivery time – 3 business day Minimum order – No Shipping fee – No Restocking fee – No
Children's Plus, Inc. 1387 Dutch American Way Beecher, IL 60401 Contract: John G. Walsh PH: 800-230-1279 FAX: 800-896-7213	Varies Contact vendor	Net Pricer – Yes Delivery time – 3 days, if in Stock Minimum order – No Shipping fee – No Restocking fee – No
Childswork/Childplay 303 Crossway Park Drive Woodbury, NY 11797 Contact: Diane Baur PH: 800-962-1141 FAX: 800-262-1886	0%	Net Pricer – No Delivery time 10 days Minimum order – No Shipping 10% min $6.95 Restocking fee – No
Classroom Products Warehouse 225 N. Fairway Drive Vernon Hills, IL 60061 Contact: Barbara Glasser PH: 888-271-8305 FAX: 888-280-6110	15% Texas Instruments & Casio Products excluded from discount	Net Pricer - No Delivery time – 5 to 10 days, if in stock Minimum order – No Shipping fee – No Restocking fee - No
Color Connection P.O. Box 2945 Denton, TX 76202 Contact: Pamela C. Kaatz PH: 214-906-2106 FAX: 940-323-9987	0%	Net Pricer – No Delivery Time – 5 days Minimum order – No Shipping Under $150.00 – 10% Over $150.01 – 8% Restocking fee - No
Continental Press 520 East Bainbridge Street Elizabeth Town, PA 17022 Contact: M. Gene McFail PH: 800-233-0759 FAX: 888-834-1303	0%	Net Pricer – No Delivery time – 4 to 5 days if rush order, extra charge Minimum order – No Shipping – 10% of order $5.00 minimum Restocking fee – No, must be returned in 30 days
Courage to Change 303 Crossway Park Drive Woodbury, NY 11797 Contact: Diane Baur PH: 516-496-4863 x 100 FAX: 516-496-4050	0%	Net Pricer – No Delivery time 10 days Minimum order – No Shipping 10% min $6.95 Restocking fee – No

EXHIBIT_____

APPROVED VENDORS		
VENDOR	**DISCOUNTS**	**NOTES**
Creative Education Institute P.O. Box 7306 Waco, TX 76714-7306 Contact: Thomas D. Johnson PH: 800-234-7319 FAX: 888-705-8620	0%	Net Pricer – Did not fill in Delivery time – 3 to 5 business days Minimum order – No Shipping fee – No Restocking fee – No
Curriculum Associates, LLC P.O. Box 2001 N. Billerica, MA 01862 Contact: Betty Duncan PH: 800-225-0248 FAX: 800-366-1158	0%	Net Pricer – No Delivery time – 3 business days Minimum order – No Shipping – 10% of order $10.99 minimum Restocking fee - No
Delaney Educational Enterprises 1455 W. Morena Blvd. San Diego, CA 92110 Contact : Sheryl Baker PH: 800-788-5557 FAX: 800-660-2199	0-30% 2010 – 2011 FALL - SPRING	Net Pricer – Yes Delivery time – 30-45 days No Minimum order Shipping – No Restocking fee – No
Delta Education, LLC 80 North West Blvd. Nashua, NH 03063 Contact: Theresa Austin PH: 800-338-5270 x 433 FAX: 866-767-6942	0% up to $249.99 $250.00 to 4499.99= 5% $500.00 TO $999.99= 10% $1000.00=15% EXCLUDED ITEMS: Delta Exclusive, Foss, Delta Science Modules, SCIS 3+, Science in a Nutshell, Math in a Nutshell, Fast Food & the Seeds of Science Roots of reading programs. Also living materials, items not listed in the PreK-8 Science & math catalog **Reference Number 2010CD**	Net Pricer – No Delivery time 7-30 days No Minimum order Shipping – 6% Min $5.00 Shipping on Live Materials 1-3 Items = $12.50 4-5 Items = $22.00 6 or more = $30.00 Restocking fee - No
Demco, Inc PO Box 7488 Madison, WI 53707-7488 Contact: Amy Schmale PH: 866-558-9068 FAX: 888-329-4728	15% library, office & tech supply consumables 15% learning materials 10% furniture & equipment Non-consumable EXCLUDED ITEMS: Security products, Subscription program products, Licensed prod. such as, Garfield, Eric Carle, Arthur, Clifford etc. **Reference Number C77046**	Net Pricer – Yes Delivery time 7-10 days Minimum order $50 after discount for free shipping, orders less than $50 FedEX ground shipping will be added to order Shipping – Transportation will be prepaid & added to orders that are dropped ship – Furniture, Equipment etc. Restocking fee - No
Destination Learn, Inc PO Box 338 Bloomington, IN 47402-0338 Contact: Terry R. Wisneuski PH: 800-925-7853 FAX: 812-331-8699	VARIES CONTACT VENDOR	Net Pricer – No Delivery time 10 days No Minimum order Shipping – Yes see web site or catalog pg 26 Restocking fee – No

EXHIBIT_____

APPROVED VENDORS		
VENDORS	**DISCOUNTS**	**NOTES**
Destiny Learning PO Box 160516 Austin, TX 78716 Contact: Don Casey PH: 866-553-8355 x 1791 FAX: 512-233-2400	0% Leapfrog School Catalog	Net Pricer – Yes Delivery time 10 days No Minimum order Shipping up to 10% of order Restocking fee – 15% after 90 days from invoice date
Destiny Learning PO Box 160516 Austin, TX 78716 Contact: Don Casey PH: 866-553-8355 x 1791 FAX: 512-233-2400	5% Pearson Supplemental Catalog	Net Pricer – Yes Delivery time 10 days No Minimum order Shipping up to 10% of order Restocking fee – 15% after 90 days from invoice date
Dick Blick Company PO Box 1267 Galesburg, IL 61402 Contact: Kristan Dwyer PH: 800-704-7744 FAX: 800-621-8293	20% 2010 Resources For Art Educators EXCLUSIONS: Items with (F) in item number – Sale Catalogs – Internet specials – orders with quantity pricing 20% only on items with (A, B, C, Z) **Reference Number QD20100**	Net Pricer – Yes Delivery time 7-10 days No Minimum order Shipping free on orders of $99 EXCLUSIONS: 50# modeling materials, paper rolls, foamboard Linoleum rolls, the 999 or master etch presses. Additional fee for lowering your order to ground from truck. Restocking fee – Minimum 15% on factory direct items
Dinah Might Adventures, LP PO Box 690328 San Antonio, TX 78269 Contact: Brenda Schultz PH: 800-993-4624 FAX: 210-698-0095	0%	Net Pricer – No Delivery time 7-10 days No Minimum order Shipping – Varies Restocking fee – No
Dynastudy, Inc PO Box 1767 League City, TX 77574 Contact: Ellen Harris PH: 877-361-0550 FAX: 877-361-1197	0% Dyna Notes 2010-2011 catalog	Net Pricer – No Delivery time 10 days Minimum Order $25 (call for waiver) Shipping up to $60 = $5.00 $60 to $999.99 = 8% $1000 to $2499.99 = 6% $2500.00 to $4999.99 = 5% $5000 to $9999.99 = 4% $10000.00 up = 3.5% Restocking fee - No
EAI Education PO Box 7046 Oakland, NJ 07436 Contact: Bernard Guglberger PH: 800-770-8010 FAX: 201-891-5689	15% 2010-2011 k-12 math & k-6 Literacy only	Net Pricer – No Delivery time 7-10 work days Minimum order – request $30 Shipping over $100 free less is $7.00 – Actual charges apply to calculators, storage products, over sized & drop shipped items from factory Restocking fee – No
Early Learning Materials Group,Inc 2727 West Woodlawn San Antonio, TX 78228 Contact: Lauren Emmot PH: 800-417-0330 FAX: 210-366-1148	0%	Net Pricer – No Delivery time 14 days Minimum order – No Shipping 10% - orders over $2000 free shipping Restocking fee – No
Easy English News **(SEE ELIZABETH CLAIRE, INC.)**		
Educational Innovations, Inc 362 Main Avenue Norwalk, CT 06851 Contact: Tami G. O'Connor PH: 888-912-7474 FAX: 203-229-0740	7% 2010-2011 Educational Innovations	Net Pricer – No Delivery time 5-7 days Minimum order – No Shipping orders under $200, 9.8% - $7.97 min Restocking fee – No

EXHIBIT_____

APPROVED VENDORS		
VENDORS	**DISCOUNTS**	**NOTES**
Educational Insights 380 North Fairway Dr. Vernon Hills, IL 60061 Contact: Darlene Nineberg PH: 888-213-1696 FAX: 847-281-1782	0%	Net Pricer – No Delivery time 5-10 days Minimum order – No Shipping – 10% of sub total Restocking fee – No
Educational Media Corp. PO Box 21311 Minneapolis, MN 55421 PH: 800-966-3382 FAX: 763-781-7753	0%	Net Pricer – No Delivery time 10 days Minimum order – 1 Item Shipping 9% Restocking fee – No
Educational Video Network, Inc 1401 19th Street Huntsville, TX 77340 Contact: Marilyn Phillips PH: 800-762-0060 FAX: 866-814-1714	0%	Net Pricer – No Delivery time – 5-7 days Minimum order – No Shipping - $6 for first item - $1 for each added item Restocking fee – 20%
Educators Outlet PO Box 397 Timnath, CO 80547 Contact: Kristin Haws PH: 800-315-2212 FAX: 866-254-5786	15% Excluding calculators	Net Pricer – No Delivery time 15 days if in stock Minimum order – No Shipping – Free ground with bid Restocking fee
El Saber Enterprises PO Box 610681 Dallas, TX 78261 Contact: Tonie Garza PH: 214-563-6869 FAX: 972-692-8832	0%	Net Pricer – No Delivery time 15 days Minimum order – No Shipping – 8% of order Restocking fee – No
Electronic Express RSR Electronixs, Inc 365 Blair Road Avenel, NJ 07001 PH: 800-972-2225 FAX: 732-381-1006	5% Electronix Express Science Purchase.com	Net Pricer – No Delivery time 14 days Minimum order $25 Shipping 6% of order Restocking 20%
Elizabeth Claire, Inc 302 Nedellec Drive Saddle Brook, NJ 07663 Contact: Tina Di Bella PH: 888-296-1090 FAX: 201-791-1901	0%	Net Pricer – No Delivery time 3 to 5 days if in stock Minimum order – No Shipping included in price Restocking fee – No
Encyclopedia Britannica, Inc 331 North La Salle Street Chicago, IL 60654 Contact: Becky Henry PH: 800-621-3900 FAX: 800-344-9624	20% 2010 Education Catalog	Net Pricer – No Delivery time 5-10 work days Minimum order – No Shipping – No Restocking fee – No
Eric Armin, Inc. **(SEE EAI EDUCATION)**		
ESC Learning Systems PO Box 440 Bulverde, TX 78163-0440 Contact: Sam Mammen PH: 800-688-3224 FAX: 877-688-3226	0%	Net Pricer – Yes Delivery time 7-14 work days Minimum order $25 Orders under $45 = $6.75 $45.01 to $200 = 15% $200.01 to $750 = 10% $759.01 to $2000 = 8% Over $2000 = 5% Restocking fee – No No returns on broken packages
Estrellita 1203 Flynn Road #250 Camarillo, CA 93012 Contact: Christine Ruvalcaba PH: 805-384-1052 FAX: 805-384-1062	0%	Net Pricer – No Delivery time 30 days Minimum order – No Shipping No Restocking fee – No

EXHIBIT_____

APPROVED VENDORS		
VENDORS	**DISCOUNTS**	**NOTES**
ETA Cuisenaire 500 Greenview Court Vernon Hills, IL 60061 Contact: Carolyn Vsnco PH: 800-445-5985 x 5177 FAX: 888-333-9588	20% Math & Science 6% Reading Excluded: all items with P in 3rd position on item number	Net Pricer – No Delivery time 7-10 days Minimum order – No Shipping orders 0 to $100 = 12% Min. $7 Over $100 free shipping Restocking fee – 15% after 30 days
(DBA) Everything About Learning 25797 Conifer Road, Suite B219 Conifer, CO 80433 Contact: Deborah Swanson PH: 303-679-9780 FAX: 303-679-9781	0-45% Tiered savings as to the amount of copies of each book you purchase	Net Pricer – No Delivery time 14 days Minimum order – No Shipping ground 0 to $300 = $7.50 for first unit $1.50 per ea up to 10 units Over $300 =7.5% Freight exact cost 3.5 to 6.5% Restocking fee - No
Fairchild Books 750 3rd Ave., 10th Floor New York, NY 10017 Contact: Gil Pivetta PH: 800-932-4724 FAX: 212-630-3868	20% Off list price	Net Pricer – No Delivery time 3 business days Minimum order – No Shipping – Varies on weight Restocking – No
Fardley Publications **(SEE ELIZABETH CLAIRE, INC)**		
Fisher Science Education 4500 Turnberry Drive Hanover Park, IL 60133 Contact: Kim Wilk PH: 800-955-1177 FAX: 800-955-4763	31%	Net Pricer – Yes Delivery time 3 days on most items Minimum order – No Shipping – On items less than $100.00 or MF items Restocking – 15% only on Items without replacement
Follett Educational Services, Inc 1433 International Parkway Woodridge, IL 60517 Contact: John F. Fleming PH: 800-621-4272 FAX: 800-638-4424	Up to 75% over publisher net prices Call vendor	Net Pricer – Yes Delivery time – 3 days if in stock Minimum order – No Shipping – No Restocking fee – No
Follett Library Resources, Inc 1340 Ridgeview Drive McHenry, IL 60050 Contact: J. Scott Chain PH: 888-511-5114 FAX: 800-852-5458	Varies Contact vendor	Net Pricer – Yes Delivery time – 15-20 days Minimum order – No Shipping – No Restocking fee – $25.00 returns 31 to 60 days after invoice
Frey Scientific 80 Northwest Blvd. Nashua, NH 03063 Contact: Trish Fields PH: 800-225-3739 FAX: 877-256-3739	20% **Reference number C-025270316-F**	Net Pricer – No Delivery time – 3 days on items in stock Minimum order – No Shipping - Free except live specimens, hazardous materials and products shipped by motor freight Restocking fee – No
Frog Publications, Inc 11820 Uradro Place, Ste 105 San Antonio, FL 33576 Contact: Kaye Pittman PH: 800-777-3764 FAX: 352-588-0863	0%	Net Pricer – No Delivery time – 3 days with extra charge Minimum order – No Shipping – $7.00 minimum or 10% which is greater (maximum of $225.00) Restocking fee – No

EXHIBIT_____

APPROVED VENDORS		
VENDORS	**DISCOUNTS**	**NOTES**
Frog Street Press 800 Industrial Blvd #100 Grapevine, TX 76051 Contact: Traci Noble PH: 800-884-3764 FAX: 800-759-3828	0%	Net Pricer – No Delivery time – 3 days in most cases Minimum order – No Shipping – 15% Minimum $8.00 Restocking fee – 15% only on Items without replacement
Gale Group, Inc (The) 27500 Drake Road Farmington Hills, MI 48331 Contact: Nader Qaimari PH: 800-877-4253 FAX: 248-699-8062	0% **REFERENCE # 20100723-P144**	Net Pricer – No Delivery time 7-10 days unprocessed – 4-6 weeks processed books Minimum order – No Shipping free on orders over $500 Restocking fee – No
Gander Publishing 412 Higuera Street, Ste 200 San Luis Obispo, CA 93401 Contact: Rik Strickland PH: 800-554-1819 FAX: 805-782-0488	0%	Net Pricer – No Delivery time – UPS 4 days Minimum order – No Shipping – 10% Restocking fee – 20% after 30 days
Gareth Stevens Classroom 111 East 14th Street Suite 349 New York, NY 10003 Contact: Cheri A. Sandlin PH: 877-444-0210 FAX: 888-436-4643	15% reflected in catalog	Net Pricer – Yes Delivery time 3 days with extra cost Minimum order – No Shipping Less than $40.00 - $3.95 $40.00 to $249.99 – 10% $250.00 to $499.99 – 8% More than $500.00 - Free Restocking fee - No
Gareth Stevens Publishing 111 East 14th Street, Suite 349 New York, NY 10003 Contact: Cheri A. Sandlin PH: 800-542-2492 FAX: 877-542-2596	25% reflected in catalog	Net Pricer – Yes Delivery time 3 days with extra charge Minimum order – No Shipping – No Restocking – No
Garrett Book Company P.O. Box 1588 Ada, OK 74821-1588 Contact: John H. Garrett PH: 800-654-9366 FAX: 888-525-1560	30% From publisher's list price	Net Pricer – Yes Delivery time – 30 days Minimum order – No Shipping fee – No Restocking fee – No
GF Educators, Inc. P.O. Box 1309 Mineola, TX 75773 Contact: Patsy Gutierrez PH: 866-425-4155 FAX: 972-937-0742	0% Volume discount for 150 plus books contact vendor	Net Pricer – No Delivery time – 3 days if in stock Minimum order – No Shipping – prepaid and added Restocking fee – return approval is required contact vendor
GHC Specialty Brands **(SEE HIGHSMITH)**		
Greenwood Publishing **(SEE dba HEINEMANN**		
Gumdrop Professional Resource Center P.O. Box 505 Bethany, MO 64424 Contact: Nancy Crovett PH: 866-305-2580 FAX: 866-638-3724	0%	Net Pricer – Yes Delivery time – 30 to 60 days Minimum order – No Shipping – 8% is added to total order Restocking fee – No

EXHIBIT_____

APPROVED VENDORS		
VENDORS	**DISCOUNTS**	**NOTES**
HMH Supplemental Publishers 1175 N. Stemmons Freeway Lewisville, TX 75067 Contact: Robin Hereford PH: 800-426-6577 ext 6109 FAX: 972-459-6114	0%	Net Pricer – No Delivery time – 45 days Minimum order – $4.50 Shipping – 10% Restocking fee – No
Hampton Brown **(SEE NATIONAL GEOGRAPHIC SCHOOL PUBLISHING)**		
Hartcourt Outlines, Inc. 7765 South 175W P.O. Box 128 Milroy, IN 46156 Contact: Bradley S. Sizemore PH: 800-428-6584 FAX: 800-278-5165	0%	Net Pricer – No Delivery time – 3 business days Minimum order – $70.00 Shipping – $3.00 to $13.00 Surcharge – paper orders are more by weight Restocking fee - No
Harry K. Wong Publications 943 North Shoreline Blvd Mountain View, CA 94043 Contact: Maria Silva PH: 650-965-7896 FAX: 650-965-7890	0 to 40%	Net Pricer - Yes Delivery time – 5 to 6 Business days Minimum order – No Shipping Up to $50.00 - $8.00 $50.01 to $150.00 - $14.00 $150.01 to $1,900.00 – 10% $1,900.01 to $5,000.00 – 9% $5,000.01 to $10,000.00 – 8% Restocking fee – No
Hawthorne Educational Services, Inc. 800 Gray Oak Drive Columbia, MO 65201 Contact: Adina Laird PH: 800-542-1673 FAX: 800-442-9509	0%	Net Pricer – No Delivery time – UPS ground Minimum order – No Shipping – 10% of subtotal Restocking fee – return approval is required contact vendor
Hayes School Publishing 321 Pennwood Ave. Pittsburgh, PA 15217 Contact: Clain N. Hayes III PH: 800-245-6234 FAX: 800-543-8771	0% **Reference number 32545**	Net Pricer – No Delivery time – 3 to 4 days Minimum order – No Shipping Under $40.00 - $5.95 Over $40.01 – 15% Restocking fee – Must return In unopened packs
Heinemann 361 Hanover Street Portsmonth, NH 03801 Contact: Robert Chase PH: 800-225-5800 FAX: 800-847-0938	0%	Net Pricer – No Delivery time – 3 days extra Cost – must ship air Minimum order – No Shipping Up to $2,000.00 – 10% Up to $10,000.00 – 8% Up to $100,000.00 – 7% Up to $9,999,999.00 – 5% Restocking fee – Did not fill in
Heinimann Raintree Classroom 151 Good Counsel Drive P.O. Box 669 Mankato, MN 56002-0669 Contact: Connie Ruyter PH: 888-454-2279 FAX: 888-844-5329	0% Various programs discounted 5-10%, catalog reflects discount	Net Pricer – No Delivery time – 7 to 10 days Minimum order – No Shipping $2,500.00 or less – 10% $2,500.01 and over 8% Restocking fee – No

EXHIBIT_____

APPROVED VENDORS		
VENDORS	**DISCOUNTS**	**NOTES**
Heinimann Raintree Library 151 Good Counsel Drive P.O. Box 669 Mankato, MN 56002-0669 Contact: Connie Ruyter PH: 888-454-2279 FAX: 888-844-5329	25% Off list price	Net Pricer – Yes Delivery time – 7 to 10 days Minimum order – No Shipping 25 books or more - free 24 books or less – 10% Restocking fee – No
Hendrick-Long Publishing 10635 Tower Oaks #D Houston, TX 77070 Contact: Michael Long PH: 800-544-3770 FAX: 832-912-7353	5%	Net Pricer – No Delivery time – 3 business days Minimum order – did not fill in Shipping Under $50.00 - $7.95 Over $50.00 - Free Restocking fee – No
Highsmith 401 S. Wright Road Janesville, WI 53546 Contact: Lisa Heinen PH: 800-543-2180 FAX: 800-350-6236	13% in stock 5% non stock	Net Pricer – No Delivery time – 3 days extra charge Minimum order – $25.00 Shipping fee – No Restocking fee – Varies by Supplier
Houghton Mifflin Harcourt School Publishers 1175 N. Stemmons Freeway Lewisville, TX 75067 Contact: Robin Hereford PH: 800-426-6577 ext 6109 FAX: 972-459-6114	0%	Net Pricer – No Delivery time – 45 days Minimum order – $4.50 Shipping – 10% Restocking fee – No
IntelliTools, Imc. 4185 Salazar Way Frederick, CO 80504 Contact: Erin Ramsey PH: 800-547-6747 FAX: 888-819-7767	0% **Reference Number** **FEIN #94-3070465** **For IntelliTools only**	Net Pricer – No Delivery time – 9 to 12 Business days Minimum order – No Shipping fee $1.00 to $199.00 - $7.00 $200.00 to $499.00 - $12.00 $500.00 to $999.00 - $18.00 Over $1,000.00 1.50% Restocking fee – No
James Stanfield Company P.O. Box 41058 Santa Barbara, CA 93140 Contact: Jack Azar PH: 800-421-6534 FAX: 805-897-1187	10% On orders over $5,000.00	Net Pricer – No Delivery time – 3 business days Minimum order – No Shipping – 10% of subtotal Restocking fee – No
Janelle Publications 1189 Twombly Road P.O. Box 811 DeKalb, IL 60115 Contact: Janet Marguardt PH: 800-888-8834 FAX: 815-756-4799	0%	Net Pricer – No Delivery time – 7 to 14 Business days Minimum order – No Shipping 10% of total order $5.00 minimum Restocking fee – No
Jarrett Publishing Company P.O. Box 1460 Rankankoma, NY 11779 Contact: Mark Jarrett PH: 800-859-7679 FAX: 631-588-4722	0%	Net Pricer – No Delivery time – 10 business days Minimum order – 10 copies Per order Shipping – 10% Under $35.00 - $3.50 Restocking fee – No
Junction of Function 8603 Ibis Cove Circle Naples, FL 34119 Contact: Kelly Wilk PH: 239-777-4009 FAX: Did not fill in	25%	Net Pricer – No Delivery time – 3 business days Minimum order – No Shipping – Based on weight Restocking fee – No

EXHIBIT_____

APPROVED VENDORS		
VENDORS	**DISCOUNT**	**NOTES**
Kamico Instructional Media, Inc PO Box 1143 Salado, TX 76571 Contact: Kathy Michael PH: 254-947-7283 FAX: 254-947-7284	0% 2010-2011 TAKS Connection	Net Pricer – No Delivery time 3 days Minimum order – No Shipping – No Restocking fee – No
Kaplan Early Learning Co. PO Box 609 Lewisville, NC 27023 Contact: Kate Shelton PH: 800-334-2014 FAX: 336-712-2243	15% on orders over $300 Excludes: any other offers or disc. Or gift certificates – playground items – lofts, computers or parts – assessments or screening material – ECERSR or ITERS-R – tot tree and items on pg 182-183 in infant/toddler catalog	Net Pricer – No Delivery time 7-14 work days Minimum order $300 Shipping order over $300 free Charges if under $300 Restocking fee 15% of order
Kids Wings Educational Associates 1707 Twin Island Drive Lockhart, TX 78644 Contact: Suzy Red PH: 888-558-1121 FAX: 888-558-1123	0%	Net Pricer – No Delivery time 7 days Minimum order No Shipping - Yes Restocking – No
Knowledge Center PO Box 6895 McAllen, TX 78502 Contact: Helen M. Jones PH: 956-212-2452 FAX: 888-596-6450	0%	Net Pricer – No Delivery time 5 days Minimum order 1 site License Shipping – No Restocking fee – No
Knowsys Test Prep, LLC 9300 S. IH 35, suiteA-500 #453 Austin, TX 78748 Contact: Sheila Griffith PH: 512-961-8522 FAX: 512-295-9809	5% 9/1/10 – 8/31/11 Basic Genius Math, Vocabulary Builder	Net Pricer – No Delivery time 3 days Minimum order 1 Teacher Set & 30 Student Sets Shipping 10% of order Restocking fee – No
Kurzwell Educational Systems **(SEE INTELLITOOLS, INC)**	**Reference Number FEIN #04-3554733 For Kurzwell Educational Systems only**	
Lakeshore Learning Material 2695 E. Dominguez Street Carson, CA 90895 Contact: Diana Lopez PH: 800-421-5354 FAX: 310-537-8600	5% All orders	Net Pricer – Yes Delivery time 7-10 days Minimum order – No Shipping – Free Restocking fee – No
Laureate Learning Systems, Inc 110 East Spring Street Wenooski, VT 05404 Contact: Karen Germaine PH: 800-562-6801 FAX: 802-655-4757	0%	Net Pricer – Available on request Delivery time 7-10 days Minimum order – No Shipping $1 to $50 = $5.00 $51 to $100 = $15.00 $101 to $250 = $25 $251 to $500 = $30 $501 to $1000 = $40 $1001 to $1600 = 65 Over $16oo = 5% Restocking fee – No
LAZEL, Inc. **(SEE CAMBIUM LEARNING)**	**Reference Number FEIN #27-1609020 for LACEL, Inc only**	

EXHIBIT_____

APPROVED VENDORS		
VENDORS	**DISCOUNTS**	**NOTES**
Learning Links, Inc 2300 Marcus Avenue New hyde Park, NY 11042 Contact: Joyce Friedland PH: 800-724-2616 FAX: 516-437-5392	20% 2010-2011 Learning Links	Net Pricer – No Delivery time 14 days Minimum order – No Shipping orders 0 to $1000 5% Orders over $1000 free shipping Restocking fee – No
Learning Resources 380 North Fairway Drive Vernon Hills, IL 60061 Contact: Darlene Nineberg PH: 888-213-1696 FAX: 888-892-8731	0%	Net Pricer – No Delivery time 7-14 days Minimum order – No Shipping 10% of order Restocking fee – No
Learning Zone 526 Everhart Road Corpus Christi, TX 78411 Contact: Jimmy Perez PH: 800-434-7644 FAX: 210-341-8760	15% orders $100 or more Exceptions 10% off $100 rugs, Furniture, Equipment	Net Pricer – No Delivery time 7-21 work days Minimum order $100 Shipping order over $100 free Otherwise actual charges Restocking fee – 5%
Lego Education 2556 Prestonwood Drive Plano, TX 75093 Contact: Betty Justus PH: 800-350-8035 FAX: 360-365-9203	5% 2010 – 2011 Lego Education	Net Pricer – No Delivery time 3-5 work days Minimum order – No Shipping 3% of order Restocking fee – No
Lerner Publishing Group 241 First Avenue North Minneapolis, MN 55401 Contact: Pharon Windquest PH: 800-328-4929 FAX: 800-332-1132	0%	Net Pricer – Yes Delivery time 30 days Minimum order – No Shipping – No Restocking – No
Library Video Company 7 East Wynnewood Road Wynnewood, PA 19096 Contact; Judith C Koss PH: 800-843-3620 FAX: 610-645-4040	0%	Net Pricer – No Delivery time 3-5 days Minimum order – No Shipping 0 to $100 = $6.95 Over $100 = add 7% Over $1500 = add 5% Restocking fee – No
LiguiSystems, Inc 3100 4th AVE East Moline, IL 61244 Contact: William Pisarra PH: 800-776-4332 FAX: 800-577-4555	0%	Net Pricer – No Delivery time 4-5 days Minimum order – No Shipping – No Restocking fee – No
LitConn, Inc 4726 W. Jacquelyn Avenue Fresno, CA 93722 Contact: Ken Davis PH: 877-842-1350 FAX: 559-277-9886	0%	Net Pricer – No Delivery time 5-7 days Minimum order – No Shipping 9% of order Restocking fee – 20%
Marco Products, Inc. 1443 Old York Road Warminister, PA 18974 Contact: Kathy L. Crocco PH: 800-448-2197 FAX: 215-956-9041	0% unless Over $500.00 to $749.99 – 5% $750.00 to $999.99 – 10% Over $1,000.00 – 15%	Net Pricer – No Delivery time - 5 to 7 business days Minimum order – No Shipping – $7.00 minimum or 10% Restocking – No

EXHIBIT_____

APPROVED VENDORS		
VENDORS	**DISCOUNTS**	**NOTES**
Master Teacher (The) PO Box 1207 Manhattan, KS 66505 Contact: DeAnn Spade PH: 800-669-9633 FAX: 800-669-1132	0%	Net Pricer – No Delivery time 14 days Minimum order – No Shipping up to $14.99 = $5.75 $15. to $29.99 = $7.65 $30 to $79.99 = $12.05 $80 to $159.99 = $19.80 $160 to $299.99 = $33.00 $300 to $599.99 = $49.50 $600 to $999.99 = $66.00 $1000 to $1999.99 = $94.75 $2000 up Call Vendor Video & Software up to $299.99 = $11 $300 to $999.99 = $16.50 $1000 and up = $25.30 Restocking fee - No
Math Teachers Press 4850 Park Glen Road Minneapolis, MN 55416 Contact: Caryl K. Pierson PH: 800-852-2435 FAX: 952-546-7502	0%	Net Pricer – No Delivery time – Did not fill in Minimum order – No Shipping – 10% Restocking fee – No
McGraw Hill (The) 420 E. Danieldale Desoto, TX 75115 Contact: Martha Bartlett PH: 800-334-7344 FAX: 469-567-5901	25% Already in catalog price	Net Pricer – Yes Delivery time – 10 to 12 days Minimum order – No Shipping – 20% Restocking fee – No
McGraw Hill School Education 420 E. Danieldale Desoto, TX 75115 Contact: Lee Burtow PH: 800-442-9685 FAX: 469-567-5901	0%	Net Pricer – Yes Delivery time – 28 to 42 days Minimum order – No Shipping – 10 to 14% Restocking fee – No
Mentoring Minds P.O. Box 8843 Tyler, TX 75711 Contact: Robert L. Bush Ph: 800-585-5258 FAX: 800-838-8186	0% Bulk pricing on quantities	Net Pricer – No Delivery time – 7 to 10 Business days Minimum order – No Shipping – See chart in Catalog or website Restocking fee – No
Meriwether Publishing LTD 885 Elkton Drive Colorado Springs, CO 80907 Contact: Diana Short PH: 800-937-5297 FAX: 719-594-9916	0%	Net Pricer – No Delivery time – 3 to 7 days Minimum order – $5.00 Shipping – UPS published rates Restocking fee – No
Millmark Education 7101 Wisconsin Ave. Ste 104 Bethesda, MD 20814 Contact: Amy Bursma PH: 877-322-8020 FAX: 877-888-5130	0%	Net Pricer – No Delivery time – 14 days Minimum order – $5.00 Shipping Up to $2,499.99 – 10% Over $2,500.00 – 8% Restocking fee – No
Mind Ware 2100 County Road C West Roseville, MN 55113 Contact: Jennifer Carlson PH: 800-274-6123 FAX: 888-299-9273	0%	Net Pricer – No Delivery time – 7 to 10 days Minimum order – No Shipping Under $25.00 - $6.50 $25.00 to $49.00 - $8.99 $50.00 to $74.99 - $10.99 $75.00 to $99.99 - $12.99 $100.00 to $149.99 - $14.99 $150.00 tp $499.99 – 10% $500.00 and up 5% Restocking fee – No

EXHIBIT_____

APPROVED VENDORS		
VENDORS	**DISCOUNTS**	**NOTES**
Modern School Supplies, Inc. P.O. Box 958 Hartford, CT 06143 Contact: David Lahey PH: 800-243-2329 FAX: 800-934-7206	10% **Reference Number DISC 10%**	Net Pricer – No Delivery time – 14 to 21 days Minimum order – $50.00 to get discount Shipping – Estimated 10% Restocking fee – 15% on Unopened goods
Mondo Publishing 980 Ave of the Americas New York, NY 10018 Contact: Randi Machado PH: 800-242-3650 FAX: 212-268-3561	0%	Net Pricer – No Delivery time – 3 business days Minimum order – No Shipping $1.00 to $499.00 – 10% $500.00 Plus – 8% Restocking fee – No
Morning Glory Press 6595 San Haroldo Way Buena Park, CA 90620 Contact: Geri Lawson PH: 888-612-8254 FAX: 888-327-4362	Quantity pricing contact vendor	Net Pricer – Yes Delivery time – 3 to 4 days Minimum order – No Shipping $40.00 or lower - $3.50 $400.00 or lower 10% $400.00 to $1,000.00 – 8% $1,000.00 plus 6% Restocking fee – No
Music in Motion 1601 E. Plano Parkway Ste 100 Plano, TX 75074 Contact: Kayle Kimery PH: 800-445-0649 FAX: 866-943-8906	0%	Net Pricer – No Delivery time – 5 to 7 days Minimum order – No Shipping $0.00 to $25.00 - $6.95 $25.00 to $40.00 - $7.95 $40.01 to $60.00 – 8.95 $60.01 to $80.00 - $9.95 $80.01 to $100.00 - $10.95 $100.01 to $500.00 – 10% $500.01 and up – 7% Restocking fee – No
Nancy Larson Publishers, Inc PO Box 688 Old Lyme, CT 06371 Contact: Nancy A. Larson PH: 860-434-0800 FAX: 860-434-6900	0%	Net Pricer – No Delivery time 10 work days Minimum order – No Shipping 10% of order Restocking fee – 15%
Nathan Levy Books, LLC 18 Moorland Bldv Monroe TWP, NJ 08831 Contact: Nathan Levy PH: 732-605-1643 FAX: 732-656-7822	0%	Net Pricer – No Delivery time – 3 days Minimum order – No Shipping – 15% or $4.50 minimum Restocking fee – No
National Geographic School Publishing 110 Broadway, Suite 208 San Antonio, TX 78205 Contact: Bonnie Skloss PH: 210-444-9359 FAX: 210-444-9366	0%	Net Pricer – No Delivery time – 3 with extra cost Minimum order – $3.00 Shipping – 12% Restocking fee – No
National Reading Styles Institute (NRSI) P.O. Box 737 Syosset, NY 11791 Contact: Juliet DiTroia PH: 800-331-3117 FAX: 516-921-5591	0%	Net Pricer – No Delivery time – 3 with extra cost Minimum order – No Shipping Up to $40.00 - $7.95 $40.01 to $100.00 - $9.95 $100.01 and up – 10% Restocking fee – No
NCS Pearson **(SEE PEARSON CLINICAL ASSESSMENT)**		

EXHIBIT_____

APPROVED VENDORS		
VENDORS	**DISCOUNTS**	**NOTES**
Neuhaus Educational Center 4433 Bissonnet Street Bellaire, TX 77401-3233 Contact: Rossanne Kelley PH: 713-664-7676 FAX: 713-664-4744	0%	Net Pricer – No Delivery time – 3 days Minimum order – No Shipping Up to $20.00 - $5.00 $21.00 to $50.00 - $7.00 $51.00 to $100.00 - $8.00 $101.00 to $200.00 - $11.00 $201.00 to $500.00 - $22.00 $501.00 to $750.00 - $34.00 $751.00 to $1,000.00 – $50.00 Over $1,001.00 – Contact Vendor Restocking fee – No returns all sales final
New Learning Concepts P.O. Box 7886 Bloomington, IN 47407-7886 Contact: Terry R. Wisniewski PH: 800-925-7853 FAX: 812-331-8699	See catalog for specified discounts	Net Pricer – No Delivery time – 3 days Minimum order – No Shipping – See catalog Restocking fee – No
New Readers Press 1320 Jamesville Ave. Syracuse, NY 13210 Contact: Nancy Ascenzo PH: 800-448-8878 FAX: 866-894-2100	20%	Net Pricer – No Delivery time – 7 to 10 days Minimum order – No Shipping – See chart in catalog Restocking fee – Did not fill in
Novel Units, Inc. P.O. Box 97 Bulverde, TX 78163-0097 Contact: Sam Mammen PH: 800-688-3224 FAX: 877-688-3226	0%	Net Pricer – Yes Delivery time – 7 to 10 days Minimum order – $25.00 Shipping Under $45.00 - $6.75 $45.01 to $200.00 – 15% $200.01 to $750.00 – 10% $750.01 to $2,000.00 – 8% Over $2,000.00 – 5% Restocking fee – No
Nystrom-Heriff Jones Educational Division 4719 W. 62nd Street Indianapolis, IN 46268 Contact: Michael O'Connor PH: 800-621-8086 FAX: 317-329-3305	0% **Reference Number BID 10-178 on P.O.**	Net Pricer – No Delivery time – 7 to 45 days Minimum order – No Shipping – 9% ($5.00 minimum charge) Restocking fee – 20% of product price
Options Publishing 136 Madison Ave, 8th Floor New York, NY 10016 Contact: Allison Leff PH: 800-782-7300 FAX: 866-424-4056	0%	Net Pricer – No Delivery time 7-10 Bus days Minimum order – No Shipping 0 to $100.99 = $10.99 $101 to $500.99 = $5.99 $501 + add 10% of subtotal Restocking fee - No
Origo Education, Inc. P.O. Box 369 St Charles, MO 63302 Contact: Denise Floyd PH: 800-674-4601 Fax: 888-674-4604	0%	Net Pricer - No Delivery time – Did not fill in Minimum order – No Shipping - 10% Restocking fee – No
Overlooked Books 694 Loop Road Killeen, TX 76542 Contact: Melissa Ritchie PH: 888-463-1169 FAX: 888-463-1166	0 -25% Off publisher list	Net Pricer – No Delivery time – 30 to 45 days Minimum order – No Shipping Less than $500.00 – 5% Over $500.00 - Free Restocking fee – No

EXHIBIT_____

APPROVED VENDORS		
VENDORS	**DISCOUNTS**	**NOTES**
Pacific Learning 15342 Graham Street Huntington Beach, CA 92649 Contact: Cindy Carter PH: 800-279-0737 FAX: 714-516-8369	0%	Net Pricer – Yes Delivery time – 7 to 10 Business days Minimum order - $30.00 Shipping Under $1,000.00 – 10% Over $1,000.00 – 8% Restocking fee – No
Pasco Scientific 10101 Foothills Blvd Roseville, CA 95747 Contact: Maryann Sexton PH: 800-772-8700 FAX: 916-786-7565	3% **Reference Number QT75388**	Net Pricer – Yes Delivery time – stock items Can be shipped next day All other items 14 to 28 days Minimum order – No Shipping fee - No Restocking fee – No
Peak Learning System **(SEE dba EVERYTHING ABOUT LEARNING)**		
Pearson Education, Inc. One Lake Street Upper Saddle River, NJ 07458 Contact: M. Vicky Hurwitz PH: 800-848-9500 FAX: 877-260-2530	0%	Net Pricer – Yes Delivery time – 30 to 45 days Minimum order – No Shipping – Approximately 8 to 10% Restocking fee – No
Perma-Bound Books 617 E. Vandalia Road Jacksonville, IL 62650 Contact: Carol Foster PH: 800-637-6581 FAX: 800-551-1169	Catalos are 15 to 30% discounted price Additional 3% off all books in Perma-Bound bindings	Net Pricer – Yes Delivery time – Within 60 days Minimum order – No Shipping fee - No Restocking fee – No
Peoples Education, Inc. 299 Market Street Saddle Brook, NJ 07663 Contact: Virginia Tanaka PH: 800-822-1081 FAX: 201-712-0045	0%	Net Pricer – Yes Delivery time – 10 to 14 Business days Minimum order – Varies per product – contact vendor Shipping fee - No Restocking fee – No
Perfection Learning Corp. 1000 N. 2nd Ave P.O. Box 500 Logan, IA 51546 Contact: Gayla Fisher PH: 800-831-4190 FAX: 800-543-2745	30% Already reflected in catalog price **Reference Number Bid 10-178**	Net Pricer – No Delivery time – 14 to 21 days Minimum order – No Shipping fee - No Restocking fee – No
Pitsco Education P.O. Box 1708 913 E. Jefferson Pittsburg, KS 66762 Contact: Angela Watson PH: 800-835-0686 FAX: 800-533-8104	0% **Reference Number 451991**	Net Pricer – No Delivery time – 4 days Minimum order – No Shipping fee Up to $99.99 - $6.00 $100.00 to $499.99 – 7% $500.00 to $999.99 – 6% $1,000.00 to $2,750.99 – 5% $2,751.00 to $3,500.99 – 4% Over $3,501.00 – 3% Restocking fee – No
Positive Promotions 15 Gilpin Ave. Hauppauge, NY 11788 Contact: Linda De Luca PH: 877-258-1225 ext 4214 FAX: 877-258-1226	5%	Net Pricer – No Delivery time – 5 to 8 days Minimum order - $100.00 for discount Shipping fee - No Restocking fee – No
Power Kids Press **(SEE ROSEN PUBLISHING)**		

EXHIBIT_____

APPROVED VENDORS		
VENDORS	**DISCOUNTS**	**NOTES**
Premier Agendas, Inc. 2000 Kentucky Street Bellingham, WA 98229 Contact: Kristen Peterson PH: 800-836-2959 FAX: 800-886-8776	0%	Net Pricer – No Delivery time – 7 to 10 days Minimum order – 25 to 100 units on custom products Shipping fee – 10 to 12% of order Restocking fee – Does not accept returns
Prentice Hall **(SEE PEARSON EDUCATION, INC)**		
Prestwick House, Inc. P.O. Box 658 Clayton, TX 19928 Contact: Susan Thomas PH: 800-932-4593 FAX: 888-718-9333	0%	Net Pricer – No Delivery time – 5 to 7 days Minimum order – No Shipping fee $50.00 or less - $6.00 $50.01 to $799.99 – 12% $800.00 or greater – 10% Restocking fee – No
Primary Concepts 1338 7th Street Berkeley, CA 94710 Contact: Robert Davis PH: 800-660-8646 FAX: 510-527-8760	0%	Net Pricer – No Delivery time – 3 business days Minimum order – No Shipping fee – 12% Restocking fee – No
Pro-Ed, Inc. 8700 Shoal Creek Austin, TX 78757 Contact: Lindy Jordan PH: 800-897-3202 FAX: 800-397-7633	Orders $5000.00+ a 10% discount If not Primary vendor orders must be over $5,000.00	Net Pricer – No Delivery time – 10 to 15 working days Minimum order – No Shipping fee – 10% of total order Restocking fee – Full refund Before 30 days, less shipping
Psychological Assessment Resources, Inc. (PAR) 16204 N. Florida Avenue Lutz, FL 33549 Contact: James S. Gyurke PH: 800-331-8378 FAX: 813-969-0794	5%	Net Pricer – No Delivery time – 5 to 7 days Minimum order – No Shipping fee – 5% of total order Restocking fee – 20% after 1 Year from purchase date
Pyramid School Products 6510 North 54th Street Tampa, FL 33610-1908 Contact: John O. Miller PH: 800-792-2644 FAX: 813-621-4688	10% **Reference Number #10-178 (EDINBURG)**	Net Pricer – No Delivery time – 3 business Days - sometimes Minimum order – $95.00 Shipping fee – Yes (did not Specify amount) Restocking fee – 15%
QEP Professional Books P.O. Box 864964 Plano, TX 75086 Contact: Catherine McGough PH: 800-323-6787 FAX: 972-964-2104	15%	Net Pricer – No Delivery time – 7 to10 days Minimum order – No Shipping – 9% Restocking fee – 5%
Queue, Inc. 1 Controls Drive Shelton, CT 06484 Contact: Peter Ulteynoaslli PH: 800-232-2224 FAX: 203-944-0775	0%	Net Pricer – No Delivery time 30 days Minimum order – No Shipping – 10% Restocking – N/A

EXHIBIT_____

APPROVED VENDORS		
VENDORS	**DISCOUNTS**	**NOTES**
RM Acquisition. LLC 9855 Woods Drive Skokie, IL 60077 Contact: David Muscatel PH: 800-678-7263 FAX: 847-329-6139	0% **Reference Number BID 10-178 on P.O.**	Net Pricer – No Delivery time – 7 to 10 business days Minimum order – No Shipping Under $50.00 - $5.00 Handling fee 9% of total order Restocking fee – No
RM Educational Software 310 Barnstable Road, Suite 101 A & B Hyannis, MA 02601 Contact: Justin Mason PH: 866-728-6756 FAX: 877-861-0770	5%	Net Pricer - Yes Delivery time – 5 business days (if in stock) Minimum order – $50.00 Shipping – Varies contact vendor Restocking fee – 15% after 14 Days of receipt of order (No Custom returns)
Rally Education 22 Railroad Ave. Glen Head, NY 11545 Contact: Margaret Ricke PH: 888-997-2559 FAX: 516-671-7900	0%	Net Pricer – Yes Delivery time – 5 days Minimum order – No Shipping fee - No Restocking fee – No
Dba Rand McNelly **(SEE RM ACQUISIONS LLC)**		
Read Naturally, Inc. 2945 Lone Oak Drive Suite IGO Saint Paul, MN 55121 Contact: Brianna McGill PH: 800-788-4085 FAX: 651-286-8751	0%	Net Pricer – No Delivery time – Ships in 1 to 5 days Minimum order – No Shipping – 10% of total order Restocking fee – $25.00
Really Good Stuff 448 Pepper Street Monroe, CT 06468 Contact: Kelly O'Connell PH: 800-366-1920 FAX: 203-268-1796	Volume discount 3 to 15% Contact vendor in writing	Net Pricer – No Delivery time – 3 days with extra charge Minimum order – No Shipping $0.01 to $29.99 - $6.95 $30.00 to $49.99 - $8.95 $50.00 to $79.99 - $10.95 Over $80.00 – 12% of order Shipping of overweight items $0.01 to $59.95 - $6.95 Over $59.96 – 10% of order Restocking fee – No
Region IV Education Services 7145 W. Tidwell Houston, TX 77092 Contact: Jo Ann Wheeler PH: 888-729-2468 FAX: 713-744-4444	0%	Net Pricer – No Delivery time – UPS ground Minimum order – No Shipping – 2% of order Restocking fee – 15%
Renaissance Learning, Inc. P.O. Box 8036 2911 Peach Street Wisconsin Rapids, WI 54495 PH: 800-338-4204 FAX: 800-788-1272	0% Volume discounts may apply Contact vendor	Net Pricer – No Delivery time – call 800-338-4204 as special rates may apply Minimum order – No Shipping – Fee schedule in catalog Restocking fee – No for first 30 days – Exchanges will be charged $8.95 shipping rate

EXHIBIT_____

APPROVED VENDORS		
VENDORS	**DISCOUNTS**	**NOTES**
Renegade Teacher Products 4500 Sojourn Drive #1707 Addison, TX 75001 Contact: Diane C. Mack PH: 972-836-3822 FAX: Did not fill in	40%	Net Pricer – Yes Delivery time – 3 days (if in stock Minimum order – No Shipping – Yes contact vendor Restocking fee – No
Research Press 2612 N. Mattis Champaign, IL 61822 Contact: Judy Parkinson PH: 800-519-2707 FAX: 217-352-1221	0% Over 50 books per order contact vendor for discount	Net Pricer – No Delivery time – 5 to 7 days Minimum order – $1.00 Shipping fee $1.00 to $59.99 - $6.00 $60.00 to $499.99 – 10% $500.00 to $1,999.99 – 8% $2,000.00 to $2,499.99 – 6% Over $2,500.00 – 4% Restocking fee – No
Riverside Publishing 3800 Golf Road, Suite 100 Rolling Meadows, IL 60008 Contact: Molly Zebrowski PH: 800-323-9540 FAX: 630-467-7192	0% Quantity Discount for complete test kits 15 to 49 – 10% 50+ - 15% Pkg of 15 (100 to 249) – 10% 250+ 15% Pkg of 25 (60 to 149) – 10% 150+ - 15% Pkg of 50 (35 to 175) – 10% 176+ - 15% Pkg of 100 (18 to 87) – 10% 88+ - 15% Manuals/Guides 15 to 49 – 10% 50+ - 15% Complete Software Program 5 to 9 – 10% 10+ - 15%	Net Pricer – No Delivery time – 3 days with Extra cost Minimum order – N/A Shipping Under $100.00 - $10.00 $100.00 to $3,000.00 – 10% $3,000.01 to $10,000.00 – 8% $10,000.01 to $50,000.00 – 7.5% $50,000.01 to $100,000.00 – 7% $100,000.01 to $200,000.00 6% Over $200,000.01 – 5% Restocking fee – Call vendor for authorization for the return
Robert-Leslie Publishing 1007 Church Street; Suite 420 Evanston, IL 60201 Contact: Charles A. Sandlin PH: 888-345-1735 FAX: 888-329-7735	0% **Reference Number BID 10-178**	Net Pricer – No Delivery time – 14 to 21 days Minimum order – No Shipping – 10% of Invoice Restocking fee – No
Rosen Classroom 29 East 21st Street New York, NY 10010 Contact: Cheri A. Sandlin PH: 800-237-9932 FAX: 888-436-4643	15% reflected in catalog **Reference Number BID 10-178**	Net Pricer – Yes Delivery time – 3 days with Extra charge Minimum order - No Shipping $1.00 to $100.00 – 10% $101.00 to $500.00 – 8% $501.00 to $1,000.00 – 7% $1,001.00 + - 6% Restocking fee – No
Rosen Publishing 29 East 21st Street New York, NY 10010 Contact: Cheri A. Sandlin PH: 800-237-9932 FAX: 888-436-4643	25% reflected in catalog **Reference Number BID 10-178**	Net Pricer – Yes Delivery time – 3 days with Extra charge Minimum order – No Shipping – No Restocking fee – No

EXHIBIT_____

APPROVED VENDORS		
VENDORS	**DISCOUNTS**	**NOTES**
S&S Worldwide, Inc 75 Mile Street Colchester, CT 06415 Contact: Miranda Stuckey PH: 800-642-7354 FAX: 800-432-2842	18% not combined with other offers	Net Pricer – No Delivery time 7-10 Bus days Minimum order – No Shipping – Items labeled FOB drop ship in catalog will add shipping to invoice Restocking – No
Saddleback Educational Pub Inc 3120 Pullman St Costa Mesa, CA 92626 Contact: Carmen Mansfield PH: 800-637-8715 Fax: 888-734-4010	20%	Net Pricer – No Delivery time 7-10 Bus days Minimum order – No Shipping 15% min $7 Restocking fee 5%
SAFARI Montage **(SEE LIBRARY VIDEO COMPANY)**		
Scholastic Inc 557 Broadway New York, NY 10012 Contact: Allison Henderson PH: 800-387-1437 FAX: 888-757-5110	25% Teaching Resources & Teacher's Friend 2010 catalog **REFERENCE # PVM**	Net Pricer – No Delivery time 7-10 days Minimum order – No Shipping 5% Restocking fee – No
Scholastic Library Publishing Inc 90 Old Sherman Turnpike Danbury, CT 06816 Contact; Kathy Brown PH: 800-825-4579 x 6951 FAX: 203-797-3478	Varies Call Vendor for prices	Net Pricer – No Delivery time 10-30 days Minimum order – No Shipping 9% Restocking – No
School Company (The) **(SEE CAREER DEVELOPMENT)**		
School Specialty W 6316 Design Drive Greenville, WI 54912 PH: 888-388-3224 Fax: 800-333-0712	7% ENP priced Cat 25% Furniture & Equipment Catalog **REFERENCE # 2010235558SS**	Net Pricer – No Delivery time 7-30 days Minimum order – No Shipping Supplies free, furniture & equipment 15% min $39 Restocking fee – No
School Specialty Intervention PO Box 9031 Cambridge, MA 02139-9031 PH: 800-435-7728 FAX: 888-440-2665	Volume discount contact vendor	Net Pricer – No Delivery time 30 days Minimum order – No Shipping % of order Restocking fee – No
Science Select, LLC 70 Shearwater Place The Woodlands, TX 77381 Contact: Carol Daniels PH: 281-419-4461 FAX: 281-292-3730	0%	Net Pricer – No Delivery time 15 days Minimum order – No Shipping 10% of order Restocking fee – No
Scott Foresman **(SEE PEARSON EDUCATION, INC.)**		
Skills USA 14001 Skills USA Way Leesburg, VA 20176 Contact: Keith Ashby PH: 800-321-8422 FAX: 703-737-8999	0%	Net Pricer – No Delivery time 5 days Minimum order – No Shipping up to $500 = 10% Over $500 = 8% Restocking fee – No

EXHIBIT_____

APPROVED VENDORS		
VENDORS	**DISCOUNTS**	**NOTES**
Sleek Software Corporation 12325 Hymeadow, Bldg H02 Austin, TX 78750 Contact: Christy Threet PH: 800-337-5335 FAX: 512-833-9718	0%	Net Pricer – No Delivery time 3-7 days Minimum order – No Shipping – No Restocking – No
Slosson Educational Pub, Inc PO Box 280 East Aurora, IL 14052-0280 Contact: Leslie M. Foote PH: 888-756-7766 FAX: 800-655-3840	5%	Net Pricer – No Delivery time 10-14 Bus days Minimum order – No Shipping 0 to $2999 =10% $3000 to $4999 = 7% $5000 to $6999 = 5% Over $7000 =Actual Over $10000 = free Restocking fee 10%
SKS Smart Kids Software, Inc PO Box 590464 Houston, TX 77259-0464 Contact: Samzntha Gray PH: 888-881-6001 FAX: 888-611-8400	0%	Net Pricer – Yes Delivery time 10 days Minimum order – No Shipping Determined per order Restocking fee – No
Smarterville Educational 1550 Executive Drive Elgin, IL 60123 Contact: Mark Leveillee PH: 800-624-2926 FAX: 800-610-5005	3%+ 2010 – 2011 Curriculum Solution	Net Pricer – No Delivery time 5-15 days Minimum order – No Shipping 6% min $9.95 Restocking fee – Yes on heavy items
Software Express 4128 A South Blvd. Charlotte, NC 28209 PH: 800-522-7638 FAX: 704-529-1010	0%	Net Pricer – Yes Delivery time 3-5 days Minimum order $50 Shipping $12.50 to $23.50 on size of order Restocking fee – No
Sopris West Educational Services, Inc. dba Cambium Learning Sopris **(SEE CAMBIUM LEARNING)**	**Reference Number FEIN #84-0770709 For Sopris West Educational Services only**	
Southpaw Enterprises, Inc PO Box 1047 Dayton, OH 45401 Contact: Brenda L. Pettit PH: 800-228-1698 FAX: 937-258-4390	Orders $5,000 to $9,999.99 3% $10,000 & over 5%	Net Pricer – No Delivery time 7-10 days Minimum order – No Shipping 14% min $8.00 Restocking fee – 15%
Springboards to Education, Inc 3802 South 281 Edinburg, TX 78539 Contact: Johnny Lopez PH: 956-383-3557 FAX: 956-381-0310	0%	Net Pricer – No Delivery time 2-3 days Minimum order $25.00 Shipping 11% of order Restocking - No
Steve Spangler Science 4400 South Federal Blvd. Englewood, CO 80110 Contact: Zarah Brown PH: 800-223-9080 FAX: 866-795-9936	5%	Net Pricer – No Delivery time 9 days Minimum order – No Shipping Up to $15 = $6.95 $15.01 to $30 = $7.95 $30.01 to $50 = $8.95 $50.01 to $75 = $9.95 $75.01 to $125 = $10.95 $125.01 + 9% of subtotal Restocking fee – No

EXHIBIT_____

APPROVED VENDORS		
VENDORS	**DISCOUNTS**	**NOTES**
Summit Learning 755 Rockwell Ave, PO Box 755 Fort Atkinson, WI 53538 Contact: Dave Johnson PH: 800-777-8817 FAX: 800-317-2194	15% off calculators 20% Math & Science Except: furniture & truck logo, live materials, **REFERENCE # 53977**	Net Pricer – No Delivery time 7-21 days Minimum order $50 Shipping Free except: live materials, furniture & items with truck logo
Sunburst Technology **(SEE SMARTERVILLE EDUCATIONAL)**		
Teacher's Discovery **(SEE AMERICAN EAGLE)**		
Technology for Education 4131 Old Sibley Memorial Hy Eagan, MN 55122 Contact: James C. Rogers PH: 800-370-0047 FAX: Did not fill in	3%	Net Pricer – Yes Delivery time – 3 business days Minimum order – $100.00 Shipping fee – 2% of P.O. Restocking fee – 25% after 30 days
Teddy Bear Press 3703 S. Edmunds Street Seattle, WA 98118 Contact: Frances S. Parker PH: 206-402-6947 FAX: 206-299-2999	0% Contact vendor for large orders	Net Pricer – No Delivery time – 7 business days Minimum order – No Shipping fee – 15% Restocking fee – No
Teen Aid, Inc. 723 E. Jackson Spokane, WA 99207 Contact: Rudy J. Hogan PH: 509-482-2868 FAX: 509-482-7994	Bulk rate pricing Contact Vendor	Net Pricer – No Delivery time – UPS shipping Minimum order – No Shipping fee – By weight via UPS plus $4.00 per box Restocking fee – Did not fill in
Teksing Toward TAKS 210 Co. Td. 1518 Morgan, TX 76671 Contact: Juanita Thompson PH: 254-622-3719 FAX: 254-622-3917	10%	Net Pricer – No Delivery time – 3 business days – most times Minimum order – No Shipping fee – $15.00 per Disk 5. Restocking fee – No
Texas Educational Tools, Inc. 3500 Beachwood Ct. St 102 Jacksonville, FL 32224 Contact: Ryan Pettus PH: 800-586-9940 FAX: 904-998-1941	0%	Net Pricer – No Delivery time – 3 business days Minimum order – No Shipping fee – No Restocking fee – No
Texas School Administrator's Legal Digest 1601 Rio Grande #441 Austin, TX 78701 Contact: Debbie Stover PH: 512-478-2113 FAX: 512-495-9955	0%	Net Pricer – No Delivery time – 3 business Days (if in stock) Minimum order – No Shipping fee – $3.50 per item Restocking fee – No
Therapro, Inc. 225 Arlington Street Framingham, MA 01702 Contact: Karen Weihrance PH: 800-257-5376 FAX: 508-875-2062	0 to $15.00 – 0% $151.00 to $500.00 – 5% $501.00 to $1,000.00 10% $1,000.00 + - 10% plus free shipping	Net Pricer – No Delivery time – 3 business Days Minimum order – No Shipping fee Up to $50.00 - $7.50 $50.01 to $75.00 - $8.95 $75.01 to $100.00 - $10.00 $100.01 to $1,000.00 – 10% Over $1,000.01 - Free Restocking fee – No

EXHIBIT_____

APPROVED VENDORS		
VENDORS	**DISCOUNTS**	**NOTES**
Thinking Maps, Inc. 401 Cascade Pointe Lane Cary, NC 27513 Contact: Ricardo Gonzalez PH: 800-243-9169 FAX: 919-678-8782	0%	Net Pricer – No Delivery time – 3 business Days (pay extra) Minimum order – No Shipping fee – 3 to 15% Restocking fee – No
Tin Man Press P.O. Box 11409 Eugene, OR 97440 Contact: Matt Rasmussen PH: 800-676-0459 FAX: 888-515-1764	10% Only to orders of $500.00 or more	Net Pricer – No Delivery time – 7 days Minimum order – No Shipping fee Under $50.00 - $5.00 $50.01 to $74.99 - $7.00 $75.00 to $99.99 - $8.00 Over $100.00 - Free Restocking fee – No
Toledo Physical Education P.O. Box 5618 Toledo, OH 43612 Contact: Dennis Metzger PH: 800-225-7749 FAX: 800-489-6256	15%	Net Pricer – No Delivery time – 2 to 4 weeks Minimum order – No Shipping fee Under $150.00 – 15% ($7.95 min) Restocking fee – Varies by Product
Treetop Publishing, Inc. P.O. Box 320725 Franklin, WI 53132 Contact: Jeffrey G. Meyers PH: 800-255-9228 FAX: 888-201-5916	10 to 15%	Net Pricer – No Delivery time – 4 to 5 Business Days Minimum order – $25.00 Shipping fee – No Restocking fee – No
Triumph Learning, LLC 136 Madison Avenue, 8th Floor New York, NY 10016 Contract: 800-221-9372 FAX: 866-805-5723	0%	Net Pricer – No Delivery time – 7 to 10 Business days Minimum order – 5 copies per title Shipping fee Less than $500.00 – 10% Plus $5.95 handling Over $500.00 – 10% only Restocking fee – No
Turtle Pine, Inc. **(SEE dba BOULDEN PUBLISHING)**		
Unique Books, Inc. 5010 Kemper Ave. St. Louis, MO 63139 Contact: Mary Jo Hunter PH: 800-533-5446 FAX: 314-776-0841	0 to 45%	Net Pricer – No Delivery time – 3 business Days Minimum order – 5 books Shipping fee – 5% Restocking fee – No
University of Texas at Austin (The) **(SEE CHARLES A. DANA)**		
Valley Speech Lauguage & Learning Center 535 Stovall Road Brownsville, TX 78520 Contact: Andrew J. Hagan PH: 956-504-2200 FAX: 956-504-2231	0%	Net Pricer – No Delivery time – 5 to 10 days Minimum order – No Shipping fee Less the $100.00 - $10.00 More than $100.00 – 10% Restocking fee – No
Visions Technology in Education P.O. Box 70479 Eugene, OR 97401 Contact: Colleen Waggoner PH: 800-877-1858 FAX: 541-349-0944	0%	Net Pricer – No Delivery time – 4 to 5 days Minimum order – No Shipping fee – UPS cost Plus $5.00 handling Restocking fee – No

EXHIBIT_____

APPROVED VENDORS		
VENDORS	**DISCOUNTS**	**NOTES**
VWR Education **(SEE dbaWARD'S NATURAL SCIENCE)**		
VWR Education, LLC **(SEE dba SCIENCE KIT)**		
Dba Ward's Natural Science PO Box 92912 Rochester, NY 14692-9012 Contact: Patti Luciano PH: 800-962-2660 FAX: 877-247-0176	10% Except Vernier Labpro, Probes & Sensors, Pasco PasPort & Kodak digital products **REFERENCE # L007021-005**	Net pricer – No Delivery time 15-30 days Minimum order – No Shipping free on orders $100 or more – except Living/perishable Materials, hazardous materials & motor freight shipments Restocking fee – No
W. Oscar Neuhaus Memorial Foundation **(SEE NEUHAUS EDUCATION CENTER)**		
Weekly Reader 3001 Cindel Drive Delran, NJ 08075 Contact: Melissa McConnell PH: 800-446-3355 FAX: 856-786-3360	0%	Net Pricer – No Delivery time 7-10 days Minimum order – No Shipping 10% of order Restocking fee – No
Windmill Books 303 Park Ave. South, Suite 1280 New York, NY 10010-3657 Contact: Cheri A. Sandlin PH: 866-478-0556 FAX: 866-814-2764	0%	Net Pricer – Yes Delivery time 7-10 days Minimum order – No Shipping - No Restocking fee – No
Woodburn Press 405 Littell Avenue Dayton, OH 45419 Contact: John O'Brien PH: 888-285-1502 FAX: 888-818-0711	0%	Net Pricer – Yes Delivery time 5-6 Bus days Minimum order – No Shipping 0 to $500 = 10% $500 to $999 = 7% $1000 to $4999 = 5% $5000 + Free Restocking fee – No
World Book, Inc 233 N. Michigan Ave. Suite 2000 Chicago, IL 60601 Contact: Donald D. Keller PH: 800-975-3250 FAX: 888-922-3766	0%	Net Pricer – No Delivery time 7-12 days Minimum fee – No Shipping – No Restocking – No
World Research Company 4926 Profit Drive Tyler, TX 75707 PH: 800-843-9737 FAX: 903-534-9289	0%	Net Pricer – Yes Delivery time 14 days Minimum order $30 Shipping $30 to $99.99 = $9.95 Over $100 add 10% of order Restocking fee – No
WRS Group, Ltd PO Box 21207 Waco, TX 76702-1207 Contact: Vicki Fulton PH: 800-299-3366 FAX: 888-977-7653	8% 2010 -2011 Health Edco, Childbirth Graphics	Net pricer – No Delivery time 7-10 days Minimum order $50 Shipping – No Restocking fee – No
Youthlight, Inc PO Box 115 Chapin, SC 29036 Contact: Sandra C. McCarthy PH: 800-209-9774 FAX: 803-345-0888	0%	Net pricer – Yes Delivery time 10 days Minimum order – No Shipping 0 to $70 =$6.95 $70.01 to 299.99 = 10% subtotal $300 to $999.99 = 6% $1000 + 4% Restocking fee – No

EXHIBIT_____

APPROVED VENDORS		
VENDORS	**DISCOUNTS**	**NOTES**
Zaner – Bloser, Inc 1201 Dublin Road Columbus, OH 43215 PH: 800-421-3018 FAX: 800-992-6087	0%	Net Pricer – Yes Delivery time 7-10 Bus days Minimum order – No Shipping fee – 10% of order Restocking fee – No
Zula USA, LLC 4111 W. Alameda Ave. Ste 501 Burbank, CA 91505 Contact: Deborah Manchester PH: 877-328-9414 FAX: 818-840-1699	10% On orders over $25,000.00	Net Pricer – No Delivery time 3 business Days (if in stock) Minimum order – No Shipping 9% of total order Restocking fee – 5%

(A NET PRICER IS A LIST OF THE CATALOG PRICES ALREADY DISCOUNTED)

EXHIBIT_____

EDINBURG CISD
2009-2010 EXPENDITURES REPORT
FOR BIDDED VENDORS ON INSTRUCTIONAL MATERIALS BID
AS OF 8-27-10

PO/PA #	PO DATE	FND	FNC	OBJ	SO	ORG	Y	PG	S	PJ	INV. #	VDR #	VDR NAME	CK DATE	CK AMT	BID #
													ACADEMIC LEARNING COMPANY LLC* Total		. 797.12	
													ALBERTO ACUNA*** Total		23,212.07	
													AMERICAN BOOK COMPANY Total		7,677.41	
													APPLIED PRACTICE LTD Total		637.29	
													ATTAINMENT COMPANY Total		533.40	
													B E PUBLISHING*** Total		106.90	
													BENCHMARK EDUCATION COMPANY Total		500.50	
													BIO CORPORATION Total		102.85	
													BMI EDUCATIONAL SERVICES INC Total		2,295.47	
													BOULDEN PUBLISHING Total		142.78	
													BUCKLE DOWN/OPTIONS PUBLISHING Total		10,178.09	
													CENGAGE LEARNING *** Total		2,364.07	
													CHARLESBRIDGE PUBLISHING Total		2,124.10	
													CITY CREEK PRESS INC Total		370.83	
													CLASSROOM PRDTS WAREHOUSE LLC* Total		1,381.86	
													CORWIN PRESS INC Total		120.40	
													CTB/MCGRAW-HILL *** Total		345.26	
													CURRICULUM ASSOCIATES INC Total		89,527.25	
													DELTA EDUCATION INC Total		17,318.99	
													DICK BLICK Total		414.54	
													DISCOUNT DICTIONARIES Total		27,987.50	
													DYNASTUDY INC** Total		24,053.21	
													ECS LEARNING SYSTEMS INC ** Total		57,264.04	
													ESTRELLITA Total		13,200.00	
													ETA CUISENAIRE Total		76,140.25	
													FOLLETT LIBRARY RESOURCES Total		17,327.22	
													FREY SCIENTIFIC COMPANY Total		38,703.99	
													FROG PUBLICATIONS Total		9,372.82	
													FROG STREET PRESS Total		54,454.76	
													FROG STREET PRESS, INC** Total		11,790.78	

EXHIBIT

EDINBURG CISD
2009-2010 EXPENDITURES REPORT
FOR BIDDED VENDORS ON INSTRUCTIONAL MATERIALS BID
AS OF 8-27-10

PO/PA #	PO DATE	FND	FNC	OBJ	SO	ORG	Y	PG	S	PJ	INV. #	VDR #	VDR NAME	CK DATE	CK AMT	BID #
													GATEWAY PRINTING & OFFICE SUP* Total		15,411.89	
													GATEWAY PRINTING & OFFICE SUPP Total		433,507.80	
													GF EDUCATORS INC** Total		2,844.06	
													GF EDUCATORS INC** Total		20,130.21	
													HASTINGS ENTERTAINMENT#9722 Total		697.73	
													HEINEMANN * * Total		567.41	
													HOUGHTON MIFFLIN HARCOURT ** Total		51,138.62	
													INNOVATIVE LEARNING CONCEPTS Total		4,972.10	
													JARRETT PUBLISHING COMPANY * * Total		22,390.90	
													KAMICO INSTRUCTIONAL MEDIA** Total		13,766.70	
													KAPLAN EARLY LEARNING Total		1,470.44	
													LAKESHORE LEARNING MATERIALS Total		99,973.27	
													LAUREATE LEARINING SYS INC ** Total		1,937.25	
													LEARNING LINKS INC Total		455.70	
													LEGO EDUCATION Total		2,971.68	
													LIBRARY VIDEO CO Total		443.62	
													LITCONN INC ** Total		9,343.10	
													MARCO PRODUCTS INC Total		977.24	
													MENTORING MINDS L.P. Total		100,567.17	
													MUSIC IN MOTION Total		891.21	
													NATIONAL EDUCATIONAL SYSTEMS** Total		198,524.04	
													NATIONAL GEOGRAPHIC SCH. PUB** Total		6,649.05	
													NATIONAL READING STYLES ** Total		189.85	
													NCS PEARSON, INC ** Total		37,716.08	
													NRSI Total		790.51	
													NYSTROM EDUCATIONAL MATERIAL Total		299.46	
													OPTIONS PUBLISHING, LLC ** Total		98,250.02	
													PEARSON EDUCATION ** Total		215,391.02	
													PEARSON LEARNING GROUP Total		6,694.62	
													PEOPLES EDUCATION ** Total		129,285.78	

EXHIBIT

EDINBURG CISD
2009-2010 EXPENDITURES REPORT
FOR BIDDED VENDORS ON INSTRUCTIONAL MATERIALS BID
AS OF 8-27-10

PO/PA #	PO DATE	FND	FNC	OBJ	SO	ORG	Y	PG	S	PJ	INV. #	VDR #	VDR NAME	CK DATE	CK AMT	BID #
													PERFECTION LEARNING CORP Total		30,519.83	
													PREMIER AGENDAS, INC. ** Total		1,717.50	
													RALLY!EDUCATION Total		55,460.00	
													READ NATURALLY Total		1,537.80	
													REGION IV SERVICE CENTER ** Total		7,915.20	
													RENAISSANCE LEARNING INC** Total		1,564.20	
													SCHOLASTIC BOOK FAIRS Total		4,584.41	
													SCHOLASTIC BOOK FAIRS - 10 Total		71,984.42	
													SCHOLASTIC INC. Total		11,492.84	
													SCHOLASTIC MAGAZINES Total		4,202.73	
													SCIENCE KIT INC Total		85,101.93	
													SHOW WHAT YOU KNOW PUB Total		2,806.72	
													SOCIAL STUDIES SCHOOL SERVICES Total		5,408.63	
													SPRINGBOARDS TO EDUCATION*** Total		203,233.13	
													THE MCGRAW-HILL COMPANIES * Total		250,941.44	
													THINKING MAPS INC Total		47,631.40	
													TRIUMPH LEARNING LLC Total		58,920.00	
													TRIUMPH LEARNING LLC *** Total		92,870.47	
													VALLEY SPEECH LANGUAGE AND Total		90.00	
													WEEKLY READER CORPORATION Total		1,251.00	
													WORLD RESEARCH CO Total		12,058.29	
													YOUTHLIGHT *** Total		52.85	
													Grand Total		2,920,039.07	

EXHIBIT

10-178, INSTRUCTIONAL MATERIALS

7108 52-2282245
4GL SCHOOL SOLUTIONS INC.
901 DULANEY VALLEY ROAD
SUITE #800
TOWSON, MD 21204

8361
AAVIM
220 SMITHONIA ROAD
WINTERVILLE, GA 30683

652 580610204
ABC SCHOOL SUPPLY
P.O. BOX 369
LANDISVILLE, PA 17538

3478 58-0957868
ABILITATIONS
P.O. BOX 922668
NORCROSS, GA 30010-2668

4773
ABSEY & CO
23011 NORTH CREST DRIVE
SPRING, TX 77389

2940 33-0277126
ACADEMIC COMMUNICATION ASSOC.
P O BOX 4279
OCEANSIDE, CA 92052

1676 94-2148582
ACADEMIC THERAPY PUBLICATIONS
20 COMMERCIAL BLVD.
NOVATO, CA 94949

8741 65-0215033
ACE EDUCATIONAL SUPPLIES INC.
5595 SOUTH UNIVERSITY DRIVE
DAVIE, FL 33328

2208 521242176
ADVERTISING PREMIUMS INCENTIVE
4471 NICOLE DR.
LANHAM, MD 20706

3615
AIMS EDUCATION FOUNDATION
P.O. BOX 8120
FRESNO, CA 93747

9157
ALACUN
P.O. DRAWER 106
SAN JUAN, TX 78589

2829 221-995-322
A W PELLER & ASSOCIATES, INC.
116 WASHINGTON AVENUE
HAWTHORNE, NJ 07507

9 74-2557188
ABC CUSTOM ADVERTISING
MARKETING CONCEPTS UNLIMITED
1800 S MAIN - SUITE 850
MCALLEN, TX 78503

5308 452-82-3784
ABECEDARIAN
P.O. BOX 92843
AUSTIN, TX 78709-2843

5881 41-1676309
ABLENET
2808 FAIRVIEW AVENUE N.
ROSEVILLE, MN 55113

9182
ACADEMIA OF LANGUAGE AND
LITERACY DEVELOPEMENT
107 MESQUITE DRIVE
SAN JUAN, TX 78589

2862 74-2878591
ACADEMIC SUPERSTORE
2101 E. SAINT ELMO
SUITE #360
AUSTIN, TX 78744

9406
ACCESS INGENUITY
3635 MONTGOMERY DRIVE
SANTA ROSA, CA 95405

9615
ACHIEVEMENT PRODUCTS
P.O. BOX 6013
CAROL STREAM, IL 60197-6013

7904
AGS PUBLISHING
P.O. BOX 2500
LEVINEN, IN 46052

6681
AIMS EDUCATION FOUNDATION
1595 SOUTH CHESTNUT
FRESNO, CA 93702

3281 38-1561383
ALLIED NATIONAL INC
13270 CAPITAL AVENUE
OAK PARK, MI 48237

EXHIBIT_____

10-178, INSTRUCTIONAL MATERIALS

7841
AMERICAN BOOK COMPANY
P.O. BOX 2638
WOODSTOCK, GA 30188

280 36-2166947
AMERICAN LIBRARY ASSOCIATION
PUBLISHING SERVICES
50 EAST HURON ST.
CHICAGO, IL 60611

3569 33-0295931
ANSMAR PUBLISHERS, INC
13257 KIRKHAM WAY
POWAY, CA 92064-7116

2006 74-2864556
APPLIED PRACTICE, LTD.
3519 CEDAR SPRINGS RD
SUITE A
DALLAS, TX 78219

718 31-1194545
AT EASE INC
7672 MONTGOMERY RD.
CINCINNATI, OH 45236

382 1-74-12599015
AUDIO VISUAL AIDS CORP
2903 NORTH FLORES STREET
SAN ANTONIO, TX 78212

432 74-2136365
AVES AUDIO VISUAL SYSTEMS INC
P.O. BOX 500
SUGAR LAND, TX 77487

1821 561761729
BAKER & TAYLOR, INC
2550 WEST TYVOLA ROAD
SUITE 300
CHARLOTTE, NC 28217

1840
BARNES & NOBLE
125 CHUBB AVE
FL 3
LYNDHURST, NJ 07071-3504

8696 1-22-3691349-2
BARNES & NOBLE BOOKSELLER 2311
3300 W. EXPRESSWAY 83
SUITE #1100
MCALLEN, TX 78501

9473
BETTER LEARNING
320 E. EBONY LANE
EDINBURG, TX 78539

2342 38-21252616
AMERICAN EAGLE CO. INC
Dba: TEACHER'S DISCOVERY
2741 PALDAN DRIVE
AUBURN HILLS, MI 48326

5769 23-2965253
AMERICAN READING COMPANY
201 S. GULPH ROAD
KING OF PRUSSIA, PA 19406

5374
APEX LEARNING INC.
1215 FOURTH AVENUE
SUITE #1500
SEATTLE, WA 98102

7663
ART IN HISTORY, INC.
154 ANDREW DRIVE
STOCKBRIDGE, GA 30281

4041 39-1365288
ATTAINMENT COMPANY
504 COMMERCE PARISWAY
VERONA, WI 53593-0160

9180
AUTHENTIC LITERACY
IMPLEMENTATION SOLUTIONS
2613 E. MILE 3 ROAD
MISSION, TX

9194
B.E. PUBLISHING
P.O. BOX 8558
WARWICK, RI 02888

654 33-0361333
BALLARD & TIGHE PUBLISHERS
471 ATLUS ST.
BREA, CA 92821

7022
BARNES & NOBLE
4005 N. 10TH STREET
MCALLEN, TX 78504

7147 13-3996703
BENCHMARK EDUCATION COMPANY
629 FIFTH AVENUE
PELHAM, NY 10803

3567 56-0935286
BLENDED CURRICULUM ENVIROMENTS
KAPLAN COMPANIES
P.O. BOX 609
LEWISVILLE, NC 27023-0609

EXHIBIT_____

10-178, INSTRUCTIONAL MATERIALS

---

136 37-063-7082
BLICK ART MATERIALS
P.O. BOX 1267
GALESBURG, IL 61402

7139 421360501
BOOKS ARE FUN
604 LINN DRIVE
EDINBURG, TX 78539

5575 68-0262082
BOULDEN PUBLISHING
P.O. BOX 1186
WEAVERVILLE, CA 96093

8691 65-0309191
BRAINCHILD
3050 HORSESHOE DRIVE N.
SUITE #290
NAPLES, FL 34104

289 232248758
BRODART COMPANY
CLINTON CTY INDUSTRIAL PARK
100 NORTH RD. PO BOX 300
MCELHATTAN, PA 17748

4415 71-0654575
BUDGETEXT
1936 N. SHILOH DR.
FAYETTEVILLE, AR 72704

4590 429-98-6762
CAIN PUBLISHING
2508 HURSTVIEW DRIVE
HURST, TX 76054

1702 38-2921566
CARLEX COMPANY
P O BOX 081786
ROCHESTER HILLS, MI 48308-1786

1330 34-1242497
CARSON-DELLOSA PUBLISHING SCHO
7027 ALBERT PICK ROAD
GREENSBORO, NC 27409

9172
CENGAGE LEARNING
10650 TOEBBEN DRIVE
INDEPENDENCE, KY 41051

3617 23-744-8176
CENTER FOR INNOVATION IN
EDUCATION, INC.
P.O. BOX 2070
SARATOGA, CA 95070-0070

2593 22-1753177
BMI EDUCATIONAL SERVICES
P.O. BOX 800
DAYTON, NJ 08810-0800

2378 23-2572114
BORENSON AND ASSOCIATES
HANDS ON EQUATIONS
P O BOX 3328
ALLENTOWN, PA 18106

5868 47-0376606
BOY'S TOWN PRESS
14100 CRAWFORD STREET
BOYS TOWN, NE 68010

287 36-2063569
BRITANNICA
331 NORTH LA SALLE STREET
CHICAGO, IL 60610

4412 42-1467966
BUCKLE DOWN PUBLISHING CO
136 MADISON AVENUE
7TH FLOOR
NEW YORK, NY 10016

8358
BUREAU FOR AT RISK YOUTH
P.O. BOX 9120
PLAINVIEW, NY 11803

5739 23-1936222
CALLOWAY HOUSE INC
451 RICHARDSON DRIVE
LANCASTER, PA 17603

519 56-036-4367
CAROLINA BIOLOGICAL SUPPLY CO
2700 YORK ROAD
BURLINGTON, NC 27215-3398

369 59-2124491
CENGAGE LEARNING, INC.
5191 NATORP BLVD.
MASON, OH 45040

1411 95-3546790
CENTER FOR CIVIC EDUCATION
5145 DOUGLAS FIR ROAD
CALABASAS, CA 91302-1440

520 36-3011936
CENTRAL SCIENTIFIC/SARGENT WEL
A VWR COMPANY
P.O. BOX 5229
BUFFALO GROVE, IL 60089

EXHIBIT_____

10-178, INSTRUCTIONAL MATERIALS

6680
CHARLES A. DANA CENTER
UT AUSTIN
2901 N IH 35, STE 2.200
AUSTIN, TX 78722

1056
CHARLESBRIDGE PUBLISHING
85 MAIN STREET
WATERTOWN, MA 02472

4420 75-2578446
CHERYL COX EDUCATIONAL CONSULT
P.O. BOX 452142
GARLAND, TX 75045-2142

135 135619818
CHILDCRAFT EDUCATION CORP
P.O. BOX 3239
LANCASTER, PA 17604-3239

7872 52-241-9421
CIELO OFFICE PRODUCTS, LLC
1209 E. HACKBERRY AVE
MCALLEN, TX 78501

1566 87-0499411
CITY CREEK PRESS, INC
P.O. BOX 8415
MINNEAPOLIS, MN 55408

8456 20-5016034
CLASSROOM PRODUCTS WAREHOUSE
225 N. FAIRWAY DRIVE
VERNON HILLS, IL 60061

7842
COLOR CONNECTION
P.O. BOX 2945
DENTON, TX 76202

2026 86-0217196
COMMUNICATION SKILL BUILDERS
P.O. BOX 708912
no forwarding address
SAN ANTONIO, TX 78270-8912

1529 41-1353612
COMMUNITY INTERVENTION INC.
2412 UNIVERSITY AVENUE SE
SUITE B
MINNEAPOLIS, MN 55414

6005 41-1988613
COMPASS POINT BOOKS
151 GOOD COUNSEL DR.
MANKATO, MN 56001

2906
COMPREHENSIVE HEALTH EDUCATION
FOUNDATION (C.H.E.F.)
159 S. JACKSON ST. SUITE 510
SEATTLE, WA 98104-4416

1931 23-1429954
CONTINENTAL PRESS INC
DBA; SEEDLING PUBLICATIONS
520 EAST BAINBRIDGE STREET
ELIZABETHTOWN, PA 17022

5182 84-1230556
CONTINENTAL BOOK COMPANY INC.
625 E. 70TH AVENUE #5
DENVER, CO 80229

5906
COOL COMMUNICATIONS, LLC
4549 RHEINS PLACE
DALLAS, TX 75205

511 562-08-4940
COPYMART
15429 E. ACACIA WAY
FOUNTAIN HILLS, AZ 85268

1713 77-0260369
CORWIN PRESS INC
2455 TELLER ROAD
THOUSAND OAKS, CA 91320

5783 13-3469851
COURAGE TO CHANGE
P.O. BOX 486
WILKESBARRE, PA 18703-0486

776 74-2509292
CREATIVE EDUCATION INSTITUTE
1105 WOODED ACRES DRIVE
SUITE #700
WACO, TX 76710

5535 74-2509292
CREATIVE EDUCATION INSTITUTE
1105 WOODED ACRES DRIVE
SUITE #700
WACO, TX 76710

2000
CTB/MCGRAW-HILL
20 RYAN RANCH ROAD
MONTEREY, CA 93940

858 04-2473413
CURRICULUM ASSOCIATES INC
P.O. BOX 2001
NORTH BILLERICA, MA 01862-0901

EXHIBIT_____

10-178, INSTRUCTIONAL MATERIALS

2346 11-299-7252
D & S MARKETING SYSTEMS INC
1205 38TH STREET
BROOKLYN, NY 11218

9085
DEER PARK TEACHER SUPPLY
401 BRADSHIRE CT
DEER PARK, TX 77536-6113

4528 235-78-6496
DELANEY EDUCATIONAL ENTERPRISE
1455 W. MORENA BLVD.
SAN DIEGO, CA 92110

657 020306063
DELTA EDUCATION INC
80 NORTHWEST BLVD
NASHUA, NH 03063

4020 39-1287070
DELTA X
P.O. BOX 256
MARINETTE, WI 54143

299 39-1697376
DEMCO INC
P.O. BOX 7488
MADISON, WI 53707-7488

9598
DESTINY LEARNING
805 LAS CIMAS PARKWAY
SUITE 240-B
AUSTIN, TX 78746

108 17416880361
DICK OFFICE SUPPLY DBA OFF.COM
1008-A EAST PECAN
MCALLEN, TX 78501

2050 042599602
DIDAX EDUCATIONAL RESOURCES
395 MAIN STREET
ROWLEY, MA 01969

6301 04-3571046
DIGI-BLOCK, INC
P.O. BOX 380247
CAMBRIDGE, MA 02238

6615
DINAH-MIGHT ADVENTURES, LP
P.O. BOX 690328
SAN ANTONIO, TX 78269-0328

7421 95-4447183
DISCOUNT DICTIONARIES
5917 OAK AVE #359
TEMPLE CITY, CA 91780

9356
DISCOVERY TOYS
8559 CURRY RD
EDINBURG, TX 78542

1998 77-0362097
DMI INTERNATIONAL CORP.
16360 MONTEREY ST.
SUITE #190
MORGAN HILL, CA 95037

8689
DOLORES BICE
17598 AUTUMN TRAIL
WHITEHOUSE, TX 75791

1054 36-3464856
DON JOHNSTON DEVELOPMENT EQUIP
26799 WEST COMMERCE DRIVE
VOLO, IL 60073

9551
DOROTHY SHELTON DBA;
PEDAGOGICAL SHIFT
P.O. BOX 720181
MCALLEN, TX 78504-0181

4082 16-1736069
DYNASTUDY, INC
P.O. BOX 1767
LEAGUE CITY, TX 77574-1767

1792 77-0108580
EARLY CHILDHOOD MANUFACTURER'S
FILE 30440
P.O. BOX 60000
SAN FRANCISCO, CA 94160

5229 22-2618811
EARLY CHILDHOOD DIRECT
P.O. BOX 369
LANDISVILLE, PA 17538

9544
EARLY LEARNING MATERIALS GROUP
2727 W. WOODLAWN AVE.
SAN ANTONIO, TX 78228

5062 58-2293573
EAST COAST WHOLESALE INC
116 W. HIGHLAND AVE.
MONROE, GA 30655

EXHIBIT

10-178, INSTRUCTIONAL MATERIALS

7916
EASY ENGLISH NEWS
P.O. BOX 2596
FAIR LAWN, NJ 07410

1453 63-6014186
EBSCO INFORMATION SERVICES
5724 HIGHWAY 280 EAST
BIRRMINGHAM, AL 35242

660 74-2401808
ECS LEARNING SYSTEMS INC
P.O. BOX 440
BULVERDE, TX 78163-0440

2039 91-0858263
EDMARK CORPORATION
1900 S. BATIVIA AVE.
GENEVA, IL 60134

1914 210687228
EDMUND SCIENTIFIC COMPANY
60 PEARCE AVE
TONAWANDA, NY 14150-6711

2154 77-0288365
EDUCAIDE SOFTWARE
P.O. BOX 1048
VALLEJO, CA 94590

679 561839795
EDUCATION CENTER INC THE
1607 BATTLEGROUND AVENUE
P O BOX 9753
GREENSBORO, NC 27429-0753

2688 61-0977043
EDUCATION ASSOCIATES INC
310 S. EVERGREEN RD.
LOUISVILLE, KY 40243

384
EDUCATIONAL INSIGHTS
152 W. WALNUT ST.
SUITE #201
GARDENA, CA 90248-3147

724 01-0549174
EDUCATIONAL RESOURCES INC.
1550 EXECUTIVE DRIVE
ELGIN, IL 60123

895 95-3741086
EDUCATIONAL MARKETING SYSTEM
8936 COMANCHE AVE
CHATSWORTH, CA 91311-6205

916 76-0285-466
EDUCATIONAL VIDEO NETWORK INC
1401 19TH STREET
HUNSTVILLE, TX 77340

1410 261-86-0376
EDUCATIONAL DESIGNS
5311 VALBURN CIRCLE
AUSTIN, TX 78731-1144

1719 36-2202279
EDUCATIONAL DIRECTORIES
P.O. BOX 68097
SCHAUMBURG, IL 60168-0097

1907 111717064
EDUCATIONAL ACTIVITIES INC
P.O. BOX 87
BALDWIN, NY 11510

1939 58-1445476
EDUCATIONAL RECORD CENTER INC
3233 BURNT MILL DRIVE
SUITE #100
WILMINGTON, NC 28403-2698

1968 06-1402557
EDUCATIONAL INNOVATIONS, INC
362 MAIN AVENUE
NORWALK, CT 06851

2366 1-74-21421243
EDUCATIONAL PRODUCTS INC
1342 NORTH IH 35 EAST
CARROLLTON, TX 75006

2919
EDUCATIONAL MATERIALS
210 SIXTH AVE
PO BOX 106
HAWTHORNE, NJ 07507-0106

2948 21-06344479
EDUCATIONAL TESTING SERVICE
ROSEDALE ROAD
PRINCETON, NJ 08541

3411
EDUCATIONAL AIDS INCORPORATED
2110 PLAINFIELD RD.
CREST HILL, IL 60403

4493
EDUCATIONAL RESEARCH SERVICE
1001 NORTH FAIRFAX ST.
ALEXANDRIA, VA 22314-1587

EXHIBIT_____

10-178, INSTRUCTIONAL MATERIALS

5415 39-1161217
EDUCATIONAL MEDIA CORP.
P.O. BOX 21311
MINNEAPOLIS, MN 55421

7881
EDUCATIONAL PUBLISHING
& CONSULTANTS
PO BOX 690328
SAN ANTONIO, TX 78269

954 31-1278812
EDUCATORAL RESOURCES
1550 EXECUTIVE DRIVE
ELGIN, IL 60123

2002 04-2264499
EDUCATORS PUBLISHING SERVICE
P.O. BOX 9031
DEPT. 1B6
CAMBRIDGE, MA 02139-9031

2196 289-38-6435
EINSTRUCTION CORPORATION
THE EDUCATION CONNEXTION
12118 ELYSIAN COURT
DALLAS, TX 75230

4076 56-1762099
ELECTRONIC PRODUCTS INC.
P.O. BOX 5757
STATESVILLE, NC 28687

8359
ELIZABETH CLAIRE INC.
EASY ENGLISH NEWS
302 NEDELLEC DRIVE
SADDLE BROOK, NJ 07663

7843
EMC PUBLISHING/PARADIGM PUB
875 MONTREAL WAY
ST. PAUL, MN 55102-4245

4657 133238649
ENABLING DEVICES/TOYS FOR SPEC
385 WARBURTON AVENUE
HASTINGS-ON-HUDSON, NY 10706

2334 95-35444384
ESSENTIAL LEARNING PRODUCTS
2300 WEST FIFTH AVENUE
P O BOX 2590
COLUMBUS, OH 43216-2590

661 36-0972955
ETA CUISENAIRE TEACHING AIDS
500 GREENVIEW COURT
VERNON HILLS, IL 60061-1862

6675 57-106897
EDUCATIONAL RESOURCES GROUP
P.O. BOX 542
WALTERBORO, SC 29488

6468 95-2980595
EDUCATOR'S CHOICE
P.O. BOX 5249
NO ANSWER*
SANTA MONICA, CA 90409-5249

1444 39-1100-505
EDUCATORS PROGRESS SERVICES
214 CENTER STREET
RANDOLPH, WI 53959-1497

2551 84-1268077
EDUCATORS OUTLET INC
P.O. BOX 397
TIMNATH, CO 80547-0397

5761
EL SABER ENTERPRISES
P.O. BOX 610681
DALLAS, TX 75261

6900 80-0104182
ELITE PROMOTIONS
50 EAST ELIZABETH STREET
BROWNSVILLE, TX 78520

9181
EM BILINGUAL EDUCATION
1474 WEST PRICE ROAD #394
BROWNSVILLE, TX 78520

7852
ENABLE MART
5353 S. 960 E. - SUITE 200
SALT LAKE CITY, UT 84117

4466 222381343
ERIC ARMIN INCORPORATED
P.O. BOX 7046
OAKLAND, NJ 07436-7046

408 77-0499560
ESTRELLITA
1203 FLYNN RD. #250
CAMARILLO, CA 93012

1608 942683644
EVAN-MOOR CORPORATION
18 LOWER RAGSDALE DRIVE
MONTEREY, CA 93940

EXHIBIT_____

10-178, INSTRUCTIONAL MATERIALS

4697 841278337
EVERYTHING ABOUT LEARNING
25797 CONIFER ROAD
SUITE B219
CONIFER, CO 80433-9047

2193 061093917
FAIRCHILD BOOKS
750 3RD AVENUE - 5TH FLOOR
NEW YORK, NY 10017

522 22-245-1761
FISHER SCIENTIFIC EDUCATION
4500 TURNBERRY DRIVE
HANOVER PARK, IL 60133

1065 362926914
FLINN SCIENTIFIC INC
P.O. BOX 219
770 N. RADDANT RD.
BATAVIA, IL 60510

2888 362369161
FOLLETT EDUCATIONAL SERVICES
1433 INTERNATIONAL PARKWAY
WOODRIDGE, IL 60517

5424 84-1234-326
FRIENDS FIRST, INC
6657 W. OTTAWA AVE
SUITE A1
LITTLETON, CO 80128

2160 752518491
FROG STREET PRESS INC.
308 EAST TRUNK ST.
CRANDALL, TX 75114

4218 38-3728269
FUN AND FUNCTION LLC
P.O. BOX 11
MERION, PA 19066

4425 77-0401941
GANDER EDUCATIONAL PUBLISHING
412 HIGUERA ST
SUITE 200
SAN LUIS OBISPO, CA 93401

217 17415026297
GATEWAY PRINTING & OFFICE
DBA/JONES & COOK STATIONERS
315 SOUTH CLOSNER
EDINBURG, TX 78539

5126 94-600-2123
GEMS - UNIV OF CA
LAWRENCE HALL OF SCIENCE #5200
BERKLEY, CA 94720

3942 482-80-3518
EYE ON MASTERY
1922 E 23RD STREET
MISSION, TX 78572

9112
FAUSTINO AARON VILLARREAL, JR.
P.O. BOX 6895
McALLEN, TX 78502

3561 13-1809948
FLAGHOUSE INCORPORATED
601 FLAGHOUSE DRIVE
HASBROUCK HEIGHTS, NJ 07604

304 36-2369161
FOLLET LIBRARY RESOURCES INC.
1340 RIDGEVIEW DRIVE
McHENRY, IL 60050-7047

523 34-1555284
FREY SCIENTIFIC COMPANY
P.O. BOX 3000
NASHUA, NH 03061-3000

1678 59-2151142
FROG PUBLICATIONS, INC.
11820 URADCO PL
SUITE #105
SAN ANTONIO, FL 33576

9120
FRONTIER SOFTWARE, INC.
P.O. BOX 56505
HOUSTON, TX 77256

9114
FWD MEDIA, INC. DBA; BRAINPOP
27 WEST 24TH STREET
SUITE 1105
NEW YORK, NY 10010

306 73-0750129
GARRETT BOOK CO
P.O. BOX 1588
ADA, OK 74821-1588

218 133380486
GAYLORD BROS
P.O. BOX 4901
SYRACUSE, NY 13221

2662 17525733345
GF EDUCATORS, INC
DBA THE TEACHER'S TOUCH
602 FERRIS AVENUE SUITE #104
WAXAHACHIE, TX 75165-3031

EXHIBIT_____

10-178, INSTRUCTIONAL MATERIALS

---

405 13-1026995
GLENCOE/MCGRAW-HILL
8787 ORION PLACE
COLUMBUS, OH 43240

8121
GLOBAL VIDEO LLC
PO BOX 684048
MILWAUKEE, WI 53268-4129

7792 75-2970941
GO TO 3T INC. DBA; GO TO LEARN
2201 AVENUE K
SUITE A1
PLANO, TX 75074

8378
GOLD COAST SERVICE
5482 WILSHINE BLVD.
SUITE #260
LOS ANGELES, CA 90036

2353 952677505
GOOD APPLE/FEARON TEACHER
4350 EQUITY DRIVE
P O BOX 2649
COLUMBUS, OH 43216

664
GOOD BOOKS EDUCATIONAL SUPPLY
1105 S. MAYS
ROUND ROCK, TX 78664

9175
GRACIELA FARIAS
BOX 92
LA JOYA, TX 78560

3700 11-3269488
GREAT EVENTS PUBLISHING
P.O. BOX 9120
PLAINVIEW, NY 11803-9020

3503 043310788
GREAT SOURCE EDUCATION GROUP
181 BALLARDVALE STREET
WILMINGTON, MA 01887

7800
GREAT SOURCE EDUCATION GROUP
1900 SOUTH BATAVIA AVENUE
GENEVA, IL 60134

8855
GREAT SOURCE
PO BOX 7050
WILMINGTON, MA 01887

323
GREENWOOD PUBLISHING DBA HEINE
361 HANOVER STREET
PORTSMOUTH, NH 03801

662 74-2420589
GREETING TREE, THE
P.O. BOX 311594
NEW BRAUNFELS, TX 78131-1594

309 43-1057878
GUMDROP BOOKS
P.O. BOX 505
BETHANY, MO 64424

7500
HAMPTON BROWN
110 BROADWAY ST
SUITE 208
SAN ANTONIO, TX 78205

1680 94-2731426
HAMPTON-BROWN BOOKS COMPANY
26385 CARMEL RANCHO BLVD.
CARMEL, CA 93923

6630 33-0147571
HARCOURT ACHIEVE
10801 N. MO PAC EXPY
BUILDING #3
AUSTIN, TX 78759-5403

7488
HARCOURT BRACE SCHOOL PUB.
6277 SEA HARBOR DR.
ORLANDO, FL 32887

5021
HARCOURT EDUCATIONAL MEASUREME
no forwarding address*
P.O. BOX 708912
SAN ANTONIO, TX 78259-3701

726 35-1136662
HARCOURT OUTLINES, INC.
7765 S. 175 WEST
P.O. BOX 128
MILROY, IN 46156

2595 553-34-9965
HARRY K WONG PUBLICATIONS INC.
943 NORTH SHORELINE BLVD.
MOUNTAIN VIEW, CA 94043

4867
HASTINGS ENTERTAINMENT
4500 N. 10TH ST
OUT OF BUSINESS***
MCALLEN, TX 78504

EXHIBIT_____

10-178, INSTRUCTIONAL MATERIALS

6589
HATCH TECHNOLOGY & TOYS
P.O. BOX 11927
WINSTON-SALEM, NC 27116

3292 251115246
HAYES SCHOOL PUBLISHING CO
321 PENNWOOD AVENUE
PITTSBURGH, PA 15221

9072 26-0811406
HEATH SCIENTIFIC
320 TEXAS STREET
CEDAR HILL, TX 75104

4988 521471842
HEINEMANN-RAINTREE CLASSROOM
151 GOOD COUNSEL DRIVE
MANKATO, MN 56002-0669

310 1-75-1296216-2
HENDRICK-LONG PUBLISHING
10635 TARA OAKS
SUITE D
HOUSTON, TX 77070

219 39-0934921
HIGHSMITH COMPANY INC
P.O. BOX 5210
JANESVILLE, WI 53547-5210

2340 36-3017007
HOLEY CARDS
3817 NORTH PULASKI ROAD
CHICAGO, IL 60641

7802
ILLINOIS MIGRANT COUNCIL
IMC - PROJECT SMART
28 EAST JACKSON, SUITE 1600
CHICAGO, IL 60604

9617
INCLUSIVE TLC SPECIAL NEEDS
2206 LEGACY OAK DRIVE
WAXHAW, NC 28173

2717 62-1746696
INGRAM LIBRARY SERVICES INC.
P.O. BOX 3006
ONE INGRAM BLVD.
LA VERGNE, TN 37086-1986

3097 56-1717372
INNOVATIVE LEARNING GROUP
401 CASCADE POINTE MAIN
CARY, NC 27513

2373 431314645
HAWTHORNE EDUCATIONAL SERVICES
800 GRAY OAK DRIVE
COLUMBIA, MO 65201

9115
HEARTBEEPS
1718 HUMBLE PLACE DRIVE
HUMBLE, TX 77338

9118
HAIGHTS CROSS COMMUNICATIONS
136 MADISON AVE, 8TH FLOOR
NEW YORK, NY 10016

9140
HELEN JONES
4821 NORTH 4TH
McALLEN, TX 78504

1366 13-2987947
HERTZ FURNITURE SYSTEMS
95 McKEE DRIVE
MAHWAH, NJ 07430

1379 13-1935377
HMH SUPPLEMENTAL PUBLISHERS IN
AN AFFILIATE OF HOUGHTON MIFFL
1175 N. STEMMONS FREEWAY
LEWISVILLE, TX 75067

1419 56-1229063
I E S S INC
P O BOX 432
KERNERSVILLE, NC 27285

4028 74-2852285
IMAGES IN INK, INC.
ATTN: VIOLA HANSHAW
3421 W. HWY. 83 STE #1
MCALLEN, TX 78501

1867 112855833
INDEPENDENT LIVING AIDS INC
200 ROBBINS LANE
JERICHO, NY 11753-2341

813
INLAND CONTAINER CORPORATION
1010 E CHAPIN ST
EDINBURG, TX 78539

3409 41-1597468
INTERACTION BOOK COMPANY
5028 HALIFAX AVE S.
MINNEAPOLIS, MN 55424

EXHIBIT_____

10-178, INSTRUCTIONAL MATERIALS

5830 95-3610624
INTERACTION PUBLISHER, INC
10200 JEFFERSON BLVD.
CULVER CITY, CA 90232-3524

814
INTERNATIONAL PAPER COMPANY
1501 NORTH CLOSNER
EDINBURG, TX 78539

6367 454-78-5552
IRMA INFANTE
INFANTE EDUCATION CENTER
5401 NORTH 10TH, SUITE 229
McALLEN, TX 78504

7522 75-2805901
ISTATION.COM
800 E. CAMPBELL ROAD
SUITE #224
RICHARDSON, TX 75081

622 74-2007128
J.R. INC
P O BOX 2816
UNIVERSAL CITY, TX 78148

3626 13-291-0651
JACKDAW PUBLICATIONS
P.O. BOX 503
AMAWALK, NY 10501-0503

4005 95-4168489
JAMES STANFIELD COMPANY INC
P.O. BOX 41058
SANTA BARBARA, CA 93140

2733
JANELLE PUBLICATIONS
P O BOX 811
DEKALB, IL 60115

7113
JARRETT PUBLISHING COMPANY
P.O. BOX 1460
RONKONKOMA, NY 11779

7850
JARRETT PUBLISHING COMPANY
10 FOLIN LANE
www.jarrettpub.com
LAFAYETTE, CA 94549

1847 952677505
JUDY/INSTRUCTO
4350 EQUITY DR - P O BOX 2649
**RET UNDELIVERABLE/SEE NOTES*
COLUMBUS, OH 43216

6200 58-2473010
JUNCTION OF FUNCTION INC.
8603 IBIS COVE CIRCLE
NAPLES, FL 34119

3716 59-7263895
JUNIOR LIBRARY GUILD
7858 INDUSTRIAL PARKWAY
PLAIN CITY, OH 43064

7880
KAGAN PUBLISHING
PO BOX 72008
SAN CLEMENTE, CA 92673-2008

1454 451-19-9667
KAMICO INSTRUCTIONAL MEDIA
P.O. BOX 1143
SALADO, TX 76571

1981 560935286
KAPLAN EARLY LEARNING CO.
P.O. BOX 609
LEWISVILLE, NC 27023-0609

8180
KAPLAN K12 LEARNING SERVICES
A DIVISION OF KAPLAN INC.
888 7TH AVENUE
NEW YORK, NY 10106

7296 74-2863281
KEE CORP. INC
915 S. 49TH STREET
TEMPLE, TX 76504

7847
KIDS WINGS
1707 TWIN ISLAND DRIVE
LOCKHART, TX 78644

666 2-4676175668
KILLEN MANAGEMENT SYSTEMS INC
901 OLDE TOWNE DR.
IRVING, TX 75061

2024 22-1694982
KIMBO EDUCATIONAL
P.O. BOX 477S
LONG BRANCH, NJ 07740-0477

1516
KIPP BROTHERS INC
P.O. BOX 781080
INDIANAPOLIS, IN 46278

EXHIBIT_____

10-178, INSTRUCTIONAL MATERIALS

4912
KNOWLEDGE UNLIMITED
P.O. BOX 52
MADISON, WI 53701-0052

9139
KNOWLEDGE CENTER
P.O. BOX 6895
McALLEN, TX 78502

9158
KNOWSYS TEST PREP, LLC
859 LITTLE BEAR ROAD
BUDA, TX 78610

2771 39-1446104
KU KNOWLEDGE UNLIMITED INC
P O BOX 52
MADISON, WI 53701-0052

9119
LA POINTE EDUCATIONAL
CONSULTANT
7502 HIGHLAND FARMS ROAD
HOUSTON, TX 77095

314 94-1525814
LAKESHORE LEARNING MATERIALS
2695 E. DOMINGUEZ STREET
CARSON, CA 90895

8110 03-0284534
LAUREATE LEARNING SYSTEMS INC.
110 EAST SPRING STREET
WINOOSKI, VT 05404

655 11-2477282
LAWRENCE HOUSE PUBLISHERS
1 WASHINGTON SQ APT 3C
LARCHMONT, NY 10538-2008

8357
LEAP FROG SCHOOLHOUSE
Div OF LEAPFROG ENTER.
6401 HOLLIS ST., SUITE #150
EMERYVILLE, CA 94608-1071

5430 95-4652013
LEAPFROG SCHOOL HOUSE
6401 HOLLIS ST - STE 100
AMERIVILLE, CA 94608

1679 11-2685231
LEARNING LINKS INC
2300 MARCUS AVENUE
NEW HYDE PARK, NY 10065

5420
LEARNING RESOURCES
380 N. FAIRWAY DRIVE
VERNON HILLS, IL 60061

5942 74-2750051
LEARNING ZONE
526 EVERHART RD.
CORPUS CHRISTI, TX 78411

856 132681696
LECTORUM PUBLICATIONS INC
205 CHUBB AVENUE
LYNDHURST, NJ 07071

7075 133599568
LEE & LOW BOOK, DBA BEBOP BOOK
95 MADISON AVENUE
SUITE #1205
NEW YORK, NY 10016

8127
LEGO EDUCATION
2556 PRESTON WOOD DR.
PLANO, TX 75093

315 41-0833899
LERNER PUBLICATIONS GROUP
241 FIRST AVE N
MINNEAPOLIS, MN 55401-1036

6564
LIBRA BILINGUAL CONNECTIONS
27 POINSETTIA PLACE
BROWNSVILLE, TX 78520

7457
LIBRARY INTERIORS OF TEXAS LLC
701 BLUEBONNET LANE
TEMPLE, TX 76502

331 36-3251268
LIBRARY STORE INC THE
P.O. BOX 964
112 E. SOUTH STREET
TREMONT, IL 61568

983 23-2353078
LIBRARY VIDEO COMPANY
7 E. WYNNEWOOD RD.
WYNNEWOOD, PA 19096

667 36-2946180
LINGUI SYSTEMS INC
3100 4TH AVENUE
EAST MOLINE, IL 61244

EXHIBIT_____

10-178, INSTRUCTIONAL MATERIALS

8618 94-2254548
LITCONN, INC
4726 W. JACQUELYN AVE.
FRESNO, CA 93722

9391
LORENZ CORP ***
501 E. 3RD ST.
BOX 802
DAYTON, OH 45401

9129
LS+S
145 RIVER ROCK
BUFFALO, NY 14207

5514 41-1658426
MACKIN LIBRARY MEDIA
3505 COUNTY ROAD 42 WEST
BURNSVILLE, MN 55306

1744
SRA MACMILLAN/MCGRAW-HILL
420 EAST DANIELDALE ROAD
DESOTO, TX 75115

8120
MACMILLAN MCGRAW-HILL
9041 GARDEN RIDGE DR
SAN ANTONIO, TX 78266

1345 102-28-5263
MACOS PUBLICATIONS
299 HOLLYWOOD AVENUE
CRESTWOOD, NY 10707

3655 74-2270378
MAGAZINE SUBSCRIPTIONS PTP
2707 PRINCETON DRIVE
AUSTIN, TX 78741

240 1-74-2117385-1
MAIME C.C.
747 N. SHEPHERD
SUITE A 800
HOUSTON, TX 77007

1562 232-522-465
MAR*CO PRODUCTS INC
1443 OLD YORK ROAD
WARMINSTER, PA 18974

9170
MARIA GARZA/EVANAGELINA TREVIN
AKA: EM BILINGUAL EDUCATION
1474 WEST PRICE ROAD #394
BROWNSVILLE, TX 78520

9169
MARIA LOURDES FLORES
AKA: AUTHENTIC LITERACY SOLUTI
2613 E. MILE 3 ROAD
MISSION, TX 78573

9173
MARITZA G. CADENAS
P.O. BOX 1592
LA JOYA, TX 78560

1418 48-0772812
MASTER TEACHER THE
LEADERSHIP LANE
P O BOX 1207
MANHATTAN, KS 66505-1207

8372
MATH TEACHER PRESS, INC
4850 PARK GLEN ROAD
MINNEAPOLIS, MN 55416

2794 11-2812429
MAXI-AIDS INC
42 EXECUTIVE BLVD.
FARMINGDALE, NY 11735

4861 33-0883062
MAYER-JOHNSON INC
2100 WHARTON ST, STE 400
PITTSBURGH, PA 15203-1942

668 36-2722075
MCDOUGAL, LITTELL & COMPANY
1175 N. STEMMONS FWY
LEWISVILLE, TX 75067-2516

6306
MCGRAW-HILL COMPANIES
CUSTOMER SERVICE
PO BOX 546
BLACKLICK, OH 43004-0546

9183
McGRAW-HILL
12600 DEERFIELD PARKWAY
SUITE 425
ALPHARETTA, GA 30004-9876

7117
MENTORING MINDS, L.P.
P.O. BOX 8843
TYLER, TX 75711

9117
MERIT SOFTWARE
121 WEST 27TH STREET
SUITE 603
NEW YORK, NY 10001

EXHIBIT_____

10-178, INSTRUCTIONAL MATERIALS

5543 36-3196249
MERIWETHER PUBLISHING LTD.
885 ELKTON DRIVE
COLORADO SPRINGS, CO 80907

2812
MIND WARE
2100 COUNTY ROAD C WEST
ROSEVILLE, MN 55113-2501

2709 75-2037627
MOCKINGBIRD HILL
P.O. BOX 5455
MIDLAND, TX 79704-5455

4532 95-2677505
PEARSON EDUCATION
DBA: MODERN CURRICULUM
P.O. BOX 2500
LEBANON, IN 46052

7073 112823735
MONDO PUBLISHING
980 6TH AVENUE
NEW YORK, NY 10018

2011 75-1872237
MUSIC IN MOTION, INC.
1601 E PLANO PKWY
SUITE #100
PLANO, TX 75074

249 39-1747375
NASCO
901 JANSEVILLE AVENUE
PO BOX 901
FORT ATKINSON, WI 53538-0901

8853
NATIONAL EDUCATIONAL SYSTEMS
6333 DE ZAVALA RD
SUITE #106
SAN ANTONIO, TX 78249

4808 132619258
NATIONAL PROFESSIONAL RESOURCE
25 SOUTH REGENT STREET
PORT CHESTER, NY 10573

6565
NCS PEARSON
400 CENTER RIDGE DRIVE
SUITE F
AUSTIN, TX 78753

920 13-2767372
NEW CENTURY EDUCATION CORP
220 OLD NEW BRUNSWICK ROAD
PISCATAWAY, NJ 08854

8802 421689450
MILLMARK EDUCATION
7101 WISCONSIN AVENUE
SUITE #104
BETHESDA, MD 20814

7747 450-49-8724
MIRABELLA'S
718 S. OLD ALAMO ROAD
EDINBURG, TX 78539

248 952677505
MODERN CURRICULUM PRESS INC
1016 OAKLANDS DRIVE
ROUND ROCK, TX 78681

225 1-06-0866215
MODERN SCHOOL SUPPLIES INC
P O BOX 958
HARTFORD, CT 06143-0958

5093 95-3781555
MORNING GLORY PRESS
6595 SAN HAROLDO WAY
BUENA PARK, CA 90620

9107
NANCY LARSON PUBLISHERS INC.
P.O. BOX 688
OLD LYME, CT 06371

1062 74-2587651
NATIONAL EDUCATIONAL SYSTEMS
12026 VISTA NOGAL
SAN ANTONIO, TX 78249

318 53-0193519
NATIONAL GEOGRAPHIC SOCIETY
1145 17TH STREET NW
WASHINGTON, DC 20036-4688

2206 11-2593470
NATIONAL READING STYLES
P.O. BOX 737
DEPT. C
SYOSSET, NY 11791-0737

616
NEW CENTURY EDUCATION
220 OLD NEW BRUNSWICK RD
PISCATAWAY, NJ 08854

4963 36-4177184
NEW CENTURY FORUM INC
5448 NORTH KIMBALL AVE
CHICAGO, IL 60625

EXHIBIT_____

10-178, INSTRUCTIONAL MATERIALS

2724 351852046
NEW LEARNING CONCEPTS INC.
P.O. BOX 7886
BLOOMINGTON, IN 47407

2324 61-1170820
NIMCO INC
P.O. BOX 9
102 HWY 81 NORTH
CALHOUN, KY 42327-0009

319 308-44-9390
NORMAN F. BERNING
P.O. BOX 5968
KATY, TX 77491

3858 36-2114861
NTC/CONTEMPORARY PUBLISHING
130 E. RANDOLPH STREET
CHICAGO, IL 60601

8188
NYSTROM HERFF JONES EDUC. DIV.
4719 W. 62ND STREET
INDIANAPOLIS, IN 46268-2593

5070 58-2164933
OLD FASHIONED PRODUCTS, INC
MUGGINS! MATH
4860 BURNT MTN. RD.
ELLIJAY, GA 30540

963 36-3481642
OPEN COURT PUBLISHING COMPANY
P O BOX 599
315 FIFTH STREET
PERU, IL 61354

9597
ORIGO EDUCATION INC.
P.O. BOX 369
ST. CHARLES, MO 63302

7074 330881950
PACIFIC LEARNING
P.O. BOX 2723
HUNTINGTON BEACH, CA 92647-072

3196 94-2266817
PASCO SCIENTIFIC
10101 FOOTHILLS BLVD
ROSEVILLE, CA 95747

4999 74-2929624
PCI EDUCATIONAL
4560 LOCKHILL SELMA RD
SUITE #100
SAN ANTONIO, TX 78249

1904 520743365
NEW READERS PRESS
1320 JAMESVILLE AVE
SYRACUSE, NY 13210

8360
NL ASSOCIATES INC.
P.O. BOX 1199
HIGHTSTOWN, NJ 08520

4042 36-3557029
NOVEL UNITS, INC.
P.O. BOX 97
BULVERDE, TX 78163-0097

368 35-1637714
NYSTROM COMPANY
4719 W. 62ND ST.
INDIANAPOLIS, IN 46268-2593

2130 13415737355
OFFICE MAX PRINT & DOC SVCS
400 E. EXPRESSWAY 83
MCALLEN, TX 78503

7820
ONCE UPON A TIME
1220 FORT WORTH HIGHWAY
NO FORWARDING ADDRESS*
WEATHERFORD, TX 76086

4408
OPTIONS PUBLISHING INC
P.O. BOX 780
NORTHBOROUGH, MA 01532-0780

5452 742888044
OVERLOOKED BOOKS
694 LOOP RD.
KILLEEN, TX 76542

9614
PAR
16204 NORTH FLORIDA AVE.
LUTZ, FL 33549

9618
PATTERSON MEDICAL
P.O. BOX 5071
BOLINGBROOK, IL 60440-5071

5085
PEARSON EDUCATION
ATTN: ORDER DEPT.
200 OLD TAPPAN RD
OLD TAPPAN, NJ 07675

EXHIBIT_____

10-178, INSTRUCTIONAL MATERIALS

2556 22-1603684
PEARSON EDUCATION, INC.
ONE LAKE STREET
UPPER SADDLE RIVER, NJ 07458

2949
PEARSON LEARNING
445 HUTCHINSON AVE
COLUMBUS, OH 43235

5884
PEARSON LEARNING GROUP
145 SOUTH MOUNT ZION ROAD
P.O. BOX 2500
LEBANON, IN 46052

6153
PEARSON NCS
5601 GREEN VALLEY DRIVE
4TH FLOOR - SALES DEPT.
BLOOMINGTON, MN 55437

8128
PEARSON PRENTICE HALL
ONE LAKE STREET
UPPER SADDLE RIVER, NJ 07458

8371
PEARSON SCOTT FORESMAN
1900 EAST LAKE AVENUE
GLENVIEW, IL 60025

6230 95-4027987
PENTON OVERSEAS INC
1958 KELLOGG AVE.
CARLSBAD, CA 92008-7226

3704 22-2989444
PEOPLES EDUCATION INC.
299 MARKET STREET
SADDLE BROOK, NJ 07663

1030 42-0895541
PERFECTION LEARNING CORP
1000 NORTH SECOND AVENUE
P.O. BOX 500
LOGAN, IA 51546-1099

1077 38-2245780
PERFORMANCE RESOURCE PRESS INC
1270 RANKIN DRIVE
SUITE F
TROY, MI 48083-2843

321 1-37-1001726
PERMA-BOUND BOOKS
617 EAST VANDALIA ROAD
JACKSONVILLE, IL 62650

4196 41-1870853
PEYTRAL PUBLICATIONS INC
P.O. BOX 1162
MINNETONKA, MN 55345

6312
PICTURE WINDOW BOOKS
P.O. BOX 669
MANKATO, MN 56002-0669

5139
PITSCO EDUCATION
913 E. JEFFERSON
PITTSBURG, KS 66762

4297 133129750
POWER KIDS PRESS
29 EAST 21st STREET
NEW YORK, NY 10010

7069 33-0481380
PREMIER AGENDAS INC
2000 KENTUCKY STREET
BELLINGHAM, WA 98229

4818 51-0275467
PRESTWICK HOUSE INC
P.O. BOX 658
CLAYTON, DE 19938

6597 943296891
PRIMARY CONCEPTS
BOX 10043
BERKELEY, CA 94709

8471 20-8398984
PRIORITY TECHNOLOGY SERVICES
7941 KATY FREEWAY #315
HOUSTON, TX 77024

1649
PRO-ED
8700 SHOAL CREEK BOULEVARD
AUSTIN, TX 78758-6897

3718 42-1240405
PROFILES CORPORATION
P.O. BOX 2443
IOWA CITY, IA 52244-2443

2903 88-0137820
PROJECTED LEARNING PROGRAMS
7506 BROADWAY EXTSTE 585
OKLAHOMA CITY, OK 73116

EXHIBIT_____

10-178, INSTRUCTIONAL MATERIALS

1745 131188180
PSYCHOLOGICAL CORPORATION
HARCOURT BRACE JOVANOVICH INC
19500 BULVERDE ROAD
SAN ANTONIO, TX 78259-3701

3014 59-0932660
PYRAMID SCHOOL PRODUCTS
6510 NORTH 54TH STREET
TAMPA, FL 33610-1908

3230
QEP, INC.
PROFESSIONAL BOOKS
P.O. BOX 864964
PLANO, TX 75086-4964

4309 06-1818765
QUALITY BOOKS INC.
1003 W. PINES RD
OREGON, IL 61061

7659 06-1032712
QUEUE INC
1 CONTROLS DRIVE
SHELTON, CT 06484

5004 91-1269126
QWIZDOM INC.
26260 CENTER RIDGE RD
WESTLAKE, OH 44145

122
RADIO SHACK
7400 NORTH 10TH STREET
SUITE C
MCALLEN, TX 78504-7707

5885
RALLY EDUCATION
22 RAILROAD AVENUE
GLEN HEAD, NY 11545

9523
RAND MCNALLY
9855 WOODS DRIVE
P.O. BOX 1906
SKOKIE, IL 60076

3140
RAPID ASSIST TECHNOLOGY, INC.
614-C S. BUSINESS IH 35
NEW BRAUNFELS, TX 78130

4061 41-1849426
READ NATURALLY, INC
2945 LONE OAK DR #190
ST. PAUL, MN 55121

2839
REALLY GOOD STUFF
448 PEPPER STREET
MONROE, CT 06468

4289
RED BRICK LEARNING
151 GOOD COUNSEL DRIVE
P.O. BOX 669
MANKATO, MN 56002-0669

324 131864492
REGENT BOOK CO INC
P.O. BOX 750
LODI, NJ 07644-0750

9177
REGION 2 ESC
209 NORTH WATER ST.
CORPUS CHRISTI, TX 78401

5740 74-1589572
REGION 4 EDUCATIONAL SERVICE
7145 W. TIDWELL RD.
HOUSTON, TX 77092

3992
REGION XIII EDUCATION SERVICE
5701 SPRINGDALE ROAD
AUSTIN, TX 78723-3675

487 39-1559474
RENAISSANCE LEARNING INC
P.O. BOX 8036
WISCONSIN RAPIDS, WI 54495-803

9401
RENEGADE TEACHER PRODUCTS
16951 ADDISON RD #1502
ADDISON, TX 75001

1716 37-0922575
RESEARCH PRESS
2612 N. MATTIS AVENUE
CHAMPAIGN, IL 61822

325 042670173
RIVERSIDE PUBLISHING COMPANY
3800 GULF ROAD
SUITE #100
ROLLING MEADOWS, IL 60008

9434
RM EDUCATION
310 BARNSTABLE ROAD
SUITE #101 A&B
HYANNIS, MA 02601

EXHIBIT_____

10-178, INSTRUCTIONAL MATERIALS

9320
ROBERT-LESLIE PUBLISHING
1007 CHURCH ST.
SUITE #420
EVANSTON, IL 60201

7879
ROBIN FOGARTY & ASSOCIATES LTD
1300 W ASTOR 23 C
CHICAGO, IL 60610

7816
ROSEN PUBLISHING
29 EAST 21ST STREET
NEW YORK, NY 10010

9174
ROSIE ALMAZAN
ACADEMIA OF LANGUAGE/LITERACY
107 MESQUITE DRIVE
SAN JUAN, TX 78589

1275 59-2082566
ROURKE PUBLISHING GROUP
P.O. BOX 3328
VERO BEACH, FL 32964

6492
ROYAL FIREWORKS PUBLISHING CO
FIRST AVENUE
P.O. BOX 399
UNIONVILLE, NY 10988-0399

9501
RSR ELECTRONICS INC.
365 BLAIR RD
AVENEL, NJ 07001

7838
S & E EDUCATIONAL MATERIALS
612 NORTH 9TH
MCALLEN, TX 78501

8010
S & S WORLDWIDE
75 MILL STREET
COLCHESTER, CT 06415

4627 39-1697376
SAGEBRUSH CORPORATION
(FORMALLY DEMCO TURTLEBACK ME)
5701 MANUFACTURERS DR.
MADISON, WI 53704

5156
SALLY DISTRIBUTORS
P.O. BOX 513
COLCHESTER, CT 06145

59 171104151885
SAM'S CLUB 8250
1400 EAST JACKSON AVENUE
MCALLEN, TX 78503

979 941545228
SAMMONS-PRESTON
1000 REMINGTON BLVD
BOLINGBROOK, IL 60440

7815
SANTILLANA USA
6041 TIMBERGATE DRIVE
CORPUS CHRISTI, TX 78414

7144
SCANTRON
34 PARKER
P.O. BOX 57009
IRVINE, CA 92619-9817

308 06-1226353
SCHOLASTIC LIBRARY PUBLISHING
90 OLD SHERMAN TURNPIKE
DANBURY, CT 06816

673 13-1824190
SCHOLASTIC INCORPORATED
2931 EAST McCARTY STREET
JEFFERSON CITY, MO 65101

2886 36-2244888
SCHOLASTIC TESTING SERVICE INC
480 MEYER ROAD
BENSENVILLE, IL 60106-1617

3513
SCHOLASTIC BOOK FAIRS
7219 S. I-35
WACO, TX 76706

4305 13-1824190
SCHOLASTIC CLASSROOM MAGAZINES
2315 DEAN STREET
SUITE #600
ST CHARLES, IL 60175-4823

4967
SCHOLASTIC
1710 E.S.E. INDUSTRIAL DR
EDINBURG, TX 78539

6046
SCHOLASTIC MAGAZINE
P.O. BOX 3710
JEFFERSON CITY, MO 65102

EXHIBIT

10-178, INSTRUCTIONAL MATERIALS

7148
SCHOLASTIC BOOK FAIRS INC
7400 SECURITY WAY
HOUSTON, TX 77040

5544
SCHOLOR'S BOOKSELF, THE
110 MELRICH ROAD
CRANBURY, NJ 08512

213 36-2754535
SCHOOL SPECIALTY
127 E. SUNFLOWER ST.
MCALLEN, TX 78504

4008 41-1741342
SCHOOL SPECIALTY-BRODHEAD GARR
100 PARAGON PARKWAY
P.O. BOX 8102
MANSFIELD, OH 44905

4945
SCHOOL SPECIALTY EDUCATION ESS
ATTN: CORINNE KRAUSE
P.O. BOX 1579
APPLETON, WI 54912

7065 39-0971239
SCHOOL SPECIALTY
W6316 DESIGN DR.
GREENVILLE, WI 54942

7327 77-0597889
SCHOOL TECHNOLOGY RESOURCES IN
5274 SCOTTS VALLEY DR. #204
SCOTTS VALLEY, CA 95066

530 16-0807641
SCIENCE KIT INC
P.O. BOX 5003
777 EAST PARK DRIVE
TONAWANDA, NY 14151-5003

6162 86-1078411
SCIENCE SELECT
70 SHEARWATER PLACE
THE WOODLANDS, TX 77381

8884 26-4455334
SCIENTIFIC MINDS, LLC
9215 FM 1130
ORANGE, TX 77632

6221 33-0920700
SCOBRE PRESS CORPORATION
2255 CALLE CLARA
LA JOLLA, CA 92037

1153 36-2692284
SCOTT FORESMAN
6025 COMMERCE STREET
SUITE #550
IRVING, TX 75063

7640 31-1444480
SHOW WHAT YOU KNOW PUBLISHING
P.O. BOX 341348
COLUMBUS, OH 43234

4422 59-2565723
SHOWBOARD INC.
106 S. TAMPANIA AVE.
SUITE #200
TAMPA, FL 33509-3240

1927 75-1291093
SIBONEY LEARNING GROUP
P.O. BOX 221029
ST LOUIS, MO 63122-8029

6368
SIGNAL MEDIA PUBLISHERS
2400 COTTONDALE LANE
LITTLE ROCK, AR 72202

6201 95-4837558
SINGLISH ENTERPRISES INC
P.O. BOX 3099
CHATSWORTH, CA 91311

5604
SKILLS USA
14001 SKILLS USA WAY
LEESBURG, VA 20176

9116
SLEEK CORPORATION
12325 HYMEADOW BUILDING 1-102
AUSTIN, TX 78750

2017 16-1001004
SLOSSON EDUCATIONAL PUBLICATIO
P.O. BOX 280
EAST AURORA, NY 14052

7463
SMART KIDS SOFTWARE INC. SKS
P.O. BOX 590464
HOUSTON, TX 77259

5074
SMG PRODUCTS
N7513 537TH STREET
MENOMONIE, WI 54751

EXHIBIT

10-178, INSTRUCTIONAL MATERIALS

1412 95-2512625
SOCIAL STUDIES SCHOOL SERVICE
10200 JEFFERSON BLVD
CULVER CITY, CA 90232

5278 84-0770709
SOPRIS WEST EDUCATIONAL SERVIC
4093 SPECIALTY PLACE
LONGMONT, CO 805047

3233 59-3157011
SOUTHWEST BOOKS
10975 W. CAVE BLVD.
DRIPPING SPRINGS, TX 78620-504

9407
SOUTHWEST LOW VISION
2297 W. CATALINA VIEW
TUCSON, AZ 85742

20 75-2241783
SPORT SUPPLY GROUP INC.
DBA; BSN SPORTS
P.O. BOX 7726
DALLAS, TX 75209

7495
SRA/MCGRAW-HILL
4360 BELTWAY PL
SUITE #200
ARLINGTON, TX 76018

4273 04-2896127
STAPLES, INC
440 S ROYAL LANE
COPPELL, TX 75019-3838

5731 84-1287834
STEVE SPANGLER SCIENCE
4400 S. FEDERAL BLVD. 1A
ENGLEWOOD, CO 80110

7128 76-0722774
STOURBRIDGE DISTRIBUTORS
214 9TH STREET
HONESDALE, PA 18431

1141 84-1089700
SUMMIT LEARNING INCORPORATED
P.O. BOX 755
755 ROCKWELL AVE.
FORT ATKINSON, WI 53538

1179 13-1425820
SUNDANCE PUBLISHERS
33 BOSTON POST ROAD WEST
SUITE 440
MARLBORO, MA 01752

2666 56-1738100
SOFTWARE EXPRESS INC
4128 SOUTH BLVD
SUITE A
CHARLOTTE, NC 28209-2643

5638 31-0945138
SOUTHPAW ENTERPRISES INC,
P.O. BOX 1047
DAYTON, OH 45401-1047

6244 20-2357381
SOUTHWEST ACADEMIC SOLUTIONS
215 GROVETON ST.
SAN ANTONIO, TX 78210

2357 31-1244492
SPOKEN ARTS/READING RESOURCES
195 SOUTH WHITE ROCK ROAD
HOLMES, NY 12531

7986 203063005
SPRINGBOARDS TO EDUCATION
3802 S. HWY. 281
EDINBURG, TX 78539

5338
STAPLES
1606 W. UNIVERSITY DRIVE
EDINBURG, TX 78539

6004 33-0903809
STARFALL PUBLICATION
P.O. BOX 359
BOULDER, CO 80306

4142 36-2010162
STOELTING
620 WHEAT LANE
WOOD DALE, IL 60191

9113
STUDY ISLAND
3400 CARLISLE STREET
SUITE 345
DALLAS, TX 785204

7425 36-4377094
SUNBURST MEDIA
P.O. BOX 9120
PLAINVIEW, NY 11803

2027 57-0764341
SUPER DUPER SCHOOL COMPANY
P.O. BOX 24997
GREENVILLE, SC 29616-2497

EXHIBIT_____

10-178, INSTRUCTIONAL MATERIALS

---

184 74-2366923
T R BOOKS
P.O. BOX 310279
NEW BRAUNFELS, TX 78131-0279

7968
TALK TOOLS
3420 N. DODGE BLVD.
SUITE #148
TUCSON, AZ 85716

6400 33-0004235
TEACHER CREATED MATERIALS PUB
5301 OCEANUS DRIVE
HUNTINGTON BEACH, CA 92649-103

2358 33-0492750
TEACHER DESIGNED LEARNING INC
6812 LAURELHURST
HUNTINGTON BEACH, CA 92647

4462 86-0765914
TEACHER'S VIDEO COMPANY
P.O. BOX 9120
PLAINVIEW, NY 11803

7796
TEACHER'S MEDIA
P.O. BOX 9120
PLAINVIEW, NY 11803

1505 33-0004325
TEACHERS CREATED MATERIALS INC
6421 INDUSTRY WAY
WESTMINSTER, CA 92683

3493
TEACHERS' CURRICULUM INSTITUTE
3735 BRADVIEW
SUITE #100
SACRAMENTO, CA 95826

7149
TEACHERS' CURRICULUM INSTITUTE
TCI SERVICE CENTER
PO BOX 1327
RANCH CORDOVA, CA 95741

5983
TEACHING & LEARNING COMPANY
501 E. 3RD ST.
DAYTON, OH 45402-2280

4385 74-2900820
TEACHING INNOVATIONS, INC
411 BRAZOS ST #99
AUSTIN, TX 78701-3608

4060 94-3232092
TEACHING RESOURCES CENTER
P.O. BOX 82777
PH/FAX NOT WORKING #'S*
SAN DIEGO, CA 92138-2777

4733 751218029
TEACHING SYSTEMS, INC
4601 HOLLOW TREE DRIVE
SUITE #111
ARLINGTON, TX 76018

9612
TECHNOLOGY IN EDUCATION
P.O. BOX 70479
EUGENE, OR 97401

9616
TECHNOLOGY FOR EDUCATION
4131 OLD SIBLEY MEMORIAL HWY
SUITE 200
EAGAN, MN 55122-1946

5111 86-0878085
TEDDY BEAR PRESS
3639 MIDWAY DRIVE
SUITE B-182A
SAN DIEGO, CA 92110

1697
TEEN-AID
723 EAST JACKSON
SPOKANE, WA 99207-2647

3023 1-74-2242230-7
TEJAS SCHOOL & OFFICE SUPPLY
103 EAST HUISACHE AVENUE
KINGSVILLE, TX 78363

7151
TEKSING TOWARD TAKS
MATHEMATICS & SCIENCE
3250 WUTHERING CIRCLE
GRAND PRAIRIE, TX 75052

8122
TEKSING TOWARD TAKS - MATH
210 COUNTY ROAD 1518
MORGAN, TX 76671-3159

8129
TEMPLE INLAND
1010 E. CHAPIN
EDINBURG, TX 78541

3459 76-0231268
TEXAS ACADEMIC DECATHLON
6300 IRVINGTON BLVD
SUITE #326
HOUSTON, TX 77022-5618

EXHIBIT_____

10-178, INSTRUCTIONAL MATERIALS

7150
TEXAS CONNECTION
PO BOX 451627
GARLAND, TX 75045-1627

9159
TEXAS EDUCATIONAL TOOLS, INC
P.O. BOX 89
LOMETA, TX 76853

1955
TEXAS FISH & GAME
1745 GREENS ROAD
HOUSTON, TX 77032

2825
TEXAS PARKS & WILDLIFE
4200 SMITH SCHOOL RD.
AUSTIN, TX 78744

5699 75-2000882
TEXAS SCHOOL ADMINISTRATORS
1601 RIO GRANDE ST
SUITE #441
AUSTIN, TX 78701-1149

7799
THE AMERICAN COMPANY
PO BOX 2638
WOODSTOCK, GA 30183-1383

1579 11-3088651
THE BUREAU FOR AT-RISK YOUTH
P.O. BOX 1246
WILKES-BARRE, PA 18703

7119
THE CHILDREN'S HEALTH MARKET
P.O. BOX 7294
WILTON, CT 06897

8362
THE EDUCATION CONNEXTION
12118 ELYSIAN CT.
DALLAS, TX 75230

8613 76-0849463
THE EDUPLATE FACTORY CORP.
1405 W. PETERS COLONY RD.
CARROLLTON, TX 75007

3928 74-2636905
THE FLIPPEN GROUP LLC
1199 HAYWOOD DRIVE
COLLEGE STATION, TX 77845

7819
THE GALE GROUP INC.
27500 DRAKE ROAD
FARMINGTON HILLS, MI 48331

3156 59-3094275
THE LEARNING CONNECTION
P O BOX 518
FROSTPROOF, FL 33843

5261 91-1891299
THE LEARNING WORKSHOP INC
14516 22ND PL W
LYNNWOOD, WA 98087-5931

8356
THE MATH LEARNING CENTER
P.O. BOX 12929
SALEM, OR 97309-0929

1404 91-1209151
THE SCHOOL COMPANY
P.O. BOX 5379
VANCOUVER, WA 98668

7382 3-20116-9971-0
THE PROFESSORS TUTOR
24633 BOGEY RIDGE
SAN ANTONIO, TX 78260

7216
THE TEACHER'S WORKROOM
4121 N. 10TH STREET
OUT OF BUSINESS*
MCALLEN, TX 78504

5789 68-0280977
THE TRAINING NETWORK
LONG ISLAND PRODUCTIONS
106 CAPITOLA DRIVE
DURHAM, NC 27713

3423 74-2818158
THE WRITE SHOP
P.O. BOX 1185
GEORGE WEST, TX 78022

9613
THERAPRO
225 ARLINGTON STREET
FRAMINGHAM, MA 01702-8723

9171
THINKING MAPS, INC
401 CASCADE POINTE LANE
CARY, NC 27513

EXHIBIT_____

10-178, INSTRUCTIONAL MATERIALS

3022 59-2124491
THOMSON LEARNING
5191 NATORP BLVD.
MASON, OH 45040

5145 534-88-2920
TIN MAN PRESS
P.O. BOX 11409
EUGENE, OR 97440

2292 34-1276429
TOLEDO P.E. SUPPLY
P.O. BOX 5618
TOLEDO, OH 43613

6602 04-3085390
TRAINER'S WAREHOUSE
89 WASHINGTON AVENUE, SUITE K
NATICK, MA 01760

86 398-24-7516
TREETOP PUBLISHING
P.O. BOX 320725
FRANKLIN, WI 53132

682
TREND ENTERPRISES INC
P.O. BOX 64073
ST. PAUL, MN 55164-0073

3135 38-273-6091
TRICON PUBLISHING
6400 SOUTH CRAWFORD ROAD
MT. PLEASANT, MI 48858

2723 13-250-1005
TRIUMPH LEARNING
P.O. BOX 900
NORTHBOROUGH, MA 01532-0900

8124
TRIUMPH LEARNING, LLC
136 MADISON AVENUE
7TH FLOOR
NEW YORK, NY 10016

8125
TRIUMPH LEARNING
107 SANDPEBBLE DR
THE WOODLANDS, TX 77381

478 86-0716-114
TROXELL COMMUNICATIONS INC.
703B OAKLAWN RD #311
PLEASANTON, TX 78064

7529 43-1772184
UNIQUE BOOKS INC
5010 KEMPER AVENUE
ST. LOUIS, MO 63139

1339 042842801
UNIVERSAL COLOR SLIDE COMPANY
4790 HANGING MOSS LANE
SARASOTA, FL 34238

3001
THE UNIVERSITY OF TX AT AUSTIN
THE CHARLES A. DANN CENTER
P.O. BOX M
AUSTIN, TX 78713-8913

5322
VALLEY SPEECH LANGUAGE & LEARN
LEARNING CENTER
535 STOVALL ROAD
BROWNSVILLE, TX 78520

2316 52-0812433
VOCATIONAL INDUSTRIAL - VICA
P O BOX 3000
14001 JAMES MONROE HIGHWAY
LEESBURG, VA 22075

8157
VOYAGER EXPANDED LEARNING
1800 VALLEY VIEW
SUITE #400
DALLAS, TX 75234

2679 56-1352557
W T COX SUBSCRIPTIONS INC
201 VILLAGE RD
SHALLOTTE, NC 28470-4441

3112 74-2128239
W. OSCAR NEUHAUS MEMORIAL FOUN
Dba; NEUHAUS EDUCATION CENTER
4433 BISSONNET
BELLAIRE, TX 77401

1403
WAL-MART SUPERCENTER
1724 WEST UNIVERSITY DRIVE
EDINBURG, TX 78539

1624 10606323896
WALDENBOOKS
SUITE A-07
2000 SOUTH EXPRESSWAY 83
HARLINGEN, TX 78552

8854
WALK THE TALK COMPANY
1100 PARKER SQUARE, STE #250
FLOWER MOUND, TX 75028

EXHIBIT_____

10-178, INSTRUCTIONAL MATERIALS

---

533 16-0971836
WARD'S NATURAL SCIENCE
5100 WEST HENRIETTA ROAD
P O BOX 92912
ROCHESTER, NY 14692-9012

7647
WAYSIDE PUBLISHING
11 JAN SEBASTIAN WAY
SANDWICH, MA 02563

1575 133603780
WEEKLY READER PUBLISHING
3001 CINDEL DRIVE
DELRAN, NJ 08075

3708 95-2483722
WESTERN PSYCHOLOGICAL SERVICES
12031 WILSHIRE BOULEVARD
LOS ANGELES, CA 90025-1251

1357 75-0859537
WHOLESALE ELECTRONIC SUPPLY
1225 ROUND TABLE DR.
DALLAS, TX 75247-3503

8961
WINDMILL BOOKS
303 PARK AVENUE SOUTH
SUITE #1280
NEW YORK, NY 10010-3657

684 65-0160650
WINDTREE ENTERPRISES INC
4790 N. CITATION DR. #106
*****ATTEMPTED NOT KNOWN******
DELRAY BEACH, FL 33445

4991 13-4125483
WIRELESS GENERATION INC.
55 WASHINGTON STREET
SUITE #900
BROOKLYN, NY 11201-1071

5614 31-1650627
WOODBURN PRESS
132 WOODBURN AVENUE
DAYTON, OH 45419

1356 36-2364281
WORLD BOOK INC
233 NORTH MICHINGAN AVENUE
SUITE #2000
CHICAGO, IL 60601

1473 36-2364281
WORLD BOOK EDUCATIONAL PRODUCT
233 N. MICHIGAN AVENUE
SUITE #2000
CHICAGO, IL 60601

4001 11-2234661
WORLD CLASS LEARNING
406 MAIN STREET
P.O. BOX 929
REISTERSTOWN, MD 21136

3570
WORLD RESEARCH COMPANY
4926 PROFIT DRIVE
TYLER, TX 75707

8123
WORLD RESEARCH CO
4926 PROFIT DRIVE
TYLER, TX 75707

1942 39-1454494
WRITE SOURCE EDUCATIONAL
PUBLISHING HOUSE
P O BOX 460
BURLINGTON, WI 53105

2847 74-2339637
WRS GROUP INC
PO BOX 21207
WACO, TX 76702-1207

4249 57-1011590
YOUTH LIGHT, INC.
P.O. BOX 115
714 COVE TRAIL
CHAPIN, SC 29036

6593
ZANER-BLOSER, INC.
1201 DUBLIN ROAD
COLUMBUS, OH 43215

1295 75-1329072
ZIG ZIGLAR CORPORATION THE
5055 W PARK BLVD - SUITE 700
PLANO, TX 75093

9358
ZULA USA, LLC
4111 W. ALAMEDA AVE.
SUITE #501
BURBANK, CA 91505

****

Vendors Printed: 526

****

EXHIBIT_____

APPROVAL OF BID 10-183, FLOOR CARE EQUIPMENT REPAIRS

Superintendent's Recommendation

That the Board of Trustees approve the recommendation to accept the Floor Care Equipment Repairs Bid, which is indicated in the attached bid tabulation as being the most favorable and advantageous to the Edinburg CISD.

Rationale

The administration sought competitive sealed bids for Floor Care Equipment Repairs. Bid opening was held at the Business Office Building on June 14, 2010, at 2:00 P.M., where three (3) proposals were opened. This term bid is to be used district wide for repair of floor care equipment on an as needed basis. This bid is to insure that the district's equipment is in good and safe working condition. Evaluation of equipment is made prior to justify repair.

Budgetary Information

Award Recommendation **$14,000.00**

Account	Description	Appropriations	Encumbrance	Expenditure	Balance
199-51-6299-63-936-199000	Supply-Maint/Operations	669,701.00	0.00	0.00	669,701.00
	TOTAL	**669,701.00**	**0.00**	**0.00**	**669,701.00**

Resource Personnel

Dr. René Gutiérrez
Mario H. Salinas
Jacqueline Kingan
Rigoberto V. Abrego
Robert J. Saenz
Sylvia D. Garcia
Amaro Tijerina

Board Policy Reference

This is in accordance with Board Policy CH, Purchasing Law Bidding Requirements.

Prepared by: _____
Robert J. Saenz, Director of Maintenance/Facilities

Approved by: _____
Mario H. Salinas, Asst. Supt. For District Administration

Within Budgetary Allocations: _____
Sylvia D. Garcia, Director for Finance

Approved by: _____
Rigoberto V. Abrego, Asst. Supt. For Finance/Operations

Recommended by: _____
Dr. René Gutiérrez, Superintendent of Schools

EXHIBIT_____PAGE(S)_____

08-30-10 A10:32 RCVD M

Notes for Bid Tabulation
Bid 10-183, Floor Care Equipment Repairs
September 14, 2010

1. **USER DEPARTMENT**: This bid was requested by Director of Maintenance and Facilities. Mr. Robert J. Saenz will be present to answer any detailed questions regarding this bid.

2. **TYPE OF BID**: This is a term contract beginning September 1, 2010 or soon thereafter and ending August 31, 2011 with an option to renew for another contract period.

3. **BID EVALUATION**: This bid was evaluated by Mr. Robert J. Saenz, Director of Maintenance and Facilities. Final recommendations to the board are done by the Superintendent of School.

4. **ORDERING INFORMATION**: Maintenance Department will prepare the purchase orders on an as needed basis following Board of Trustee approval.

5. **AMOUNT SPENT LAST YEAR**: **$14,950.15**

6. **TOTAL AWARD RECOMMENDATION**:

VENDOR	AWARD RECOMMENDATION
Gulf Coast Paper 635 Billy Mitchell Brownsville, TX 78521 Contact: Carlos Solis PH: 800-460-3297 FAX: 956-541-6917	$14,000.00
TOTAL AWARD RECOMMENDATION	**$14,000.00**

7. **BID EVALUATION NOTES**:
   A - Award recommendation to lowest overall and most advantageous bidder.

EXHIBIT _____

EDINBURG CONSOLIDATED INDPENENT SCHOOL DISTRICT
10-183, FLOOR CARE EQUIPMENT REPAIRS TERM QUOTE

FLOOR CARE EQUIPMENT REPAIRS TABULATION

VENDOR	RATE PER HOUR	PROFIT OF MARGIN PER CENT	PROVIDE FREE ESTIMATE	FREE PICK-UP AND DELIVERY	EST DOWN TIME	WARRANTY PROVIDED	RANK
Gulf Coast Paper 635 Billy Mitchell Brownsville, TX 78521	Battery operated $45.00 Electric Floor machines $35.00 Small Vacuum $20.00	30%	YES	YES	7–10 DAYS	YES	1
Made Rite 101 N. Palm Dr Pharr, TX 78577	$29.95	35%	YES	YES	2--DAY	NO	2
Washing Equipment of Texas 2813 W. Expressway 83, Suite C La Feria, TX 78559	$75.00	15%	Yes	Yes, if in area– otherwise ½ hour travel time fee	1-3 - DAYS	YES	3

Evaluators Signature _____

EXHIBIT _____

10-183, FLOOR CARE EQUIPMENT REPAIRS

---

517 74-1789083
A-OK VACUUM & JANITORIAL
1617 NORTH 10TH STREET
MCALLEN, TX 78501

MARIO RAMOS
956-686-3531 FAX 956-687-4191

553 742609927
C & S SAFETY SUPPLY
P.O. BOX 4527
820 EAST WHITEWING BLDG C
MCALLEN, TX 78502
SHAWN DONNELY
956-687-4852 FAX 956-682-6096

650 1-74-2546859-6
DIVERSITECH SYSTEMS
416 EAST CEDAR STREET
MCALLEN, TX 78501

DANIEL SWERINGER
956-687-7695 FAX 956-618-5014

2524 112005531
GLOBAL INDUSTRIAL
11 HARBOR PARK DRIVE
DEPT. HW
PORT WASHINGTON, NY 11050

800-472-0101 FAX 888-381-2868

417 458-60-0352
GREEN DIAMOND DISTRIBUTORS
P O BOX 260578
CORPUS CHRISTI, TX 78426

PATRICK CARSON
361-241-7881 FAX 361-241-8758

39
MADE-RITE JANITOR SUPPLY CO
101 PALM DRIVE
PHARR, TX 78577

MARK CLOW
956-787-1875 FAX 956-787-1181

7217 466-47-3554
ALL VALLEY PAINT & SUPPLY
614 W. FERGUSON
PHARR, TX 78577

BANKS BARBEE
956-781-0805 FAX 956-702-9198

7060
CHARLIE'S EQUIPMENT REPAIRS
1309 NOEMI
PHARR, TX 78577

CHARLIE SOLIS
956-639-6942 FAX 956-781-4703

2719 75-243464-2
EAGLE BRUSH & CHEMICAL
P.O. BOX 59068
DALLAS, TX 75229

ROSANNE RENOIT
800-888-5722 FAX 972-484-4501

468 13611502801
GRAINGER
921 EAST PECAN BLVD
MCALLEN, TX 78501

MICHAEL CHARLES
956-682-6321 FAX 956-682-9122

245 1741533700
GULF COAST PAPER
635 BILLY MITCHELL BLVD
BROWNSVILLE, TX 78521

CARLOS SOLIS
800-460-3297 FAX 956-541-6917

5432 1-13-5526506-4
MSC INDUSTRIAL SUPPLY CO
2125 N. 77 SUNSHINE STRIP #3
HARLINGEN, TX 78550

LUIS OMAR SOLIS
800-596-4748 FAX 956-412-8131

EXHIBIT _____

10-183, FLOOR CARE EQUIPMENT REPAIRS

3100 459-86-1657
PRIME SOURCE
4601 STAFFORD DRIVE
COLLEYVILLE, TX 76034

GERALD MCNUTT
972-790-7597 FAX 972-790-7525 ✓

7908 58-2633373
SELIG INDUSTRIES
4106 TARPON LN
GRAND PRAIRIE, TX 75052

CURTIS TIEKEN
800-447-3544 FAX 972-660-4675 ✓

7295 3-20122-0650-7
TRIPLE "A" JANITORIAL SUPPLIES
P.O. BOX 155
LA BLANCA, TX 78558

JUAN A. SALINAS
956-383-0349 FAX 956-383-0683

3642 74-2686271
WASHING EQUIPMENT OF TEXAS/WET
2813 W. EXPRESSWAY 83
SUITE A
LA FERIA, TX 78559
Victor DeLosSantos
956-412-7257 FAX 210-662-9794 ✓

445 44-0522196
SAFETY FLOORS
27502 WHITE RANCH RD
P.O. BOX 85
LA FERIA, TX 78559
MARIO GONZALEZ
956-873-3555 FAX 956-797-9487 ✓

4156 1-74-2196683-3
TEXAS MULTI CHEM, INC
P.O. BOX 291306
KERRVILLE, TX 78029-1306

STEVE CORAWAY
800-292-1214 FAX 830-895-3388 ✓

618
VALLEY JANITOR SUPPLY CO
620 W VAN BUREN
HARLINGEN, TX 78550

956-423-4342 FAX 956-423-6036 ✓

1306 246-78-0996
ZEP MANUFACTURING COMPANY
2814 LORETTA
HARLINGEN, TX 78550

MIKE PREDDY
956-412-1273 FAX 956-423-2001 ✓

****

Vendors Printed: 20

****

CLASS - ITEM
934 - 29

EXHIBIT _____

APPROVAL OF BID 11-08, BUSES FOR TRANSPORTATION DEPARTMENT

Superintendent's Recommendation

That the Board of Trustees approve the recommendation for Buses through the BuyBoard awarded contracts.

Rationale

The BuyBoard sought competitive sealed bids and have awarded a contract to Longhorn Bus Sales. This contract complies with all bidding requirements as required by federal, state, and local laws. Buses are needed to transport students to and from home and school.

Budgetary Information

TOTAL AWARD RECOMMENDATION: $916,478.00

Account	Description	Appropriations	Encumbrance	Expenditure	Balance
199-34-6631-00-939-199000	Vehicles	1,003,558.00	0.00	0.00	1,003,558.00
	TOTALS	**1,003,558.00**	**0.00**	**0.00**	**1,003,558.00**

Resource Personnel

Dr. René Gutiérrez
Mario H. Salinas
Jacqueline Kingan
Rigoberto V. Abrego
Rudy Zamora
Sylvia D. Garcia
Amaro Tijerina

Board Policy Reference

This is in accordance with the Board Policy CH, Purchasing Law Bidding Requirements.

Prepared by: _____
Rudy Zamora, Director of Transportation

Approved by: _____
Mario H. Salinas, Asst. Supt. For District Administration

Within Budgetary Allocations: _____
Sylvia D. Garcia, Director of Finance

Approved by: _____
Rigoberto V. Abrego, Asst. Supt. For Finance/Operations

Recommended by: _____
Dr. René Gutiérrez, Superintendent of Schools

08-30-10 P04:03 RCVD

EXHIBIT_____PAGE(S)_____

Notes for BuyBoard Bid
BID 11-08, Buses for Transportation Department
BuyBoard Contract 306-08
September 14, 2010

1. **USER DEPARTMENT:** The buses were requested by the Transportation Department. Mr. Rudy Zamora will be present to answer any questions regarding this bid.

2. **TYPE OF BID:** This is a BuyBoard one time purchase.

3. **ORDERING INFORMATION:** Transportation Department will prepare purchase orders after the Board of Trustee approval.

4. **APPROXIMATE AMOUNT SPENT LAST YEAR:** $912,278.00

5. **AWARD RECOMMENDATION:**

VENDOR	AWARD RECOMMENDATION
Longhorn Bus Sales 6921 Homestead Road Houston, TX 77028 PH: 713-631-9306	2 Fifty-Three seat passenger buses $188,318.00 8 Seventy-Seven seat passenger buses $728,160.00
TOTAL AWARD RECOMMENDATION	**$916,478.00**

EXHIBIT_____

August 26, 2010

Prepared For:
Edinburg CISD

Drawer 990
Edinburg, TX 78540-
(956)316 - 7230
Reference ID: 77 PASS

Presented By:
LONGHORN BUS SALES
Christi H Smith
6921 HOMESTEAD ROAD
HOUSTON TX 77028 -
(713)631-9306

Thank you for the opportunity to provide you with the following quotation on a new IC Corporation vehicle. I am sure the following detailed specification will meet your operational requirements, and I look forward to serving your business needs.

Model Profile
2011 INTEGRATED CE S BUS (PB105)

APPLICATION:	School Transportation
MISSION:	Requested GVWR: 29800. Calc. GVWR: 29800 Calc. Start / Grade Ability: 22.10% / 2.59% @ 55 MPH Calc. Geared Speed: 73.4 MPH
FUEL ECONOMY:	8.77 MPG @ 55 MPH
DIMENSION:	Wheelbase: 276.00, CA: N/A, Axle to Frame: 157.00
ENGINE, DIESEL:	{MaxxForce DT} EPA 10, 230 HP @ 2200 RPM, 660 lb-ft Torque @ 1300 RPM, 2400 RPM Governed Speed
TRANSMISSION, AUTOMATIC:	{Allison 2500_PTS} 4th Generation Controls; Wide Ratio, 5-Speed, With Overdrive, Less PTO Provision, Less Retarder, With 33,000-lb GVW & GCW Max. School Bus
CLUTCH:	Omit Item (Clutch & Control)
AXLE, FRONT NON-DRIVING:	{International I-100SG} I-Beam Type, 10,000-lb Capacity
AXLE, REAR, SINGLE:	{Dana Spicer 19060S} Single Reduction, 19,800-lb Capacity, 190 Wheel Ends Gear Ratio: 5.29
TIRE, FRONT:	(2) 11R22.5 G149 RSA/RH (GOODYEAR) 501 rev/mile, load range G, 14 ply
TIRE, REAR:	(4) 11R22.5 G149 RSA/RH (GOODYEAR) 501 rev/mile, load range G, 14 ply
SUSPENSION, RR, SPRING, SINGLE:	Two Stage, Vari-Rate; 19,800-lb Capacity
PAINT:	Cab schematic 100NB Location 1: 4421, School Bus Yellow (Std) Chassis schematic N/A

Proposal: 2718-01

EXHIBIT_____

Code	Description
PB10500	Base Chassis, Model INTEGRATED CE S BUS with 276.00 Wheelbase, N/A CA, and 157.00 Axle to Frame.
1570	TOW HOOK, FRONT (2) Frame Mounted
1CAC	FRAME RAILS High Strength Low Alloy Steel (50,000 PSI Yield): 10.125" x 3.062" x 0.312" (257.2mm x 77.8mm x 8.0mm); 480.1" (12195mm) Maximum OAL
	Includes : CHASSIS PAINT Chassis Painted Prior to Body Mounting : FRAME RAILS All holes Laser Aligned and Machine Punched, Powder Coated Prior to Full Assembly, Assembled in Fixture using "Grade 8" Bolts : FRAME REINFORCEMENT, SPECIAL 3.30" x 1.80" x 0.312" x 31.50" Inverted "L" in Front Shock Absorber Mounting Area
1LLE	BUMPER, FRONT Full Width, Aerodynamic, Heavy Duty, Steel
	Includes : BUMPER, FRONT THICKNESS 1/4 Inch
1LNT	CROSSING GATE, FRONT Omit Item
	Includes : CROSSING GATE, FRONT Matches Contour of Bumper
1SAM	CROSSMEMBER, REAR, AF (2)
1WJE	WHEELBASE RANGE 276" (700cm) Only
2ADC	AXLE, FRONT NON-DRIVING {International I-100SG} I-Beam Type, 10,000-lb Capacity
	Includes : AXLE, FRONT SQUARING to Plus or Minus .015 Inch, using a Special Fixture to Assure Parallelism of Springs
	Notes : The following features should be considered when calculating Front GAWR: Front Axles; Front Suspension; Brake System; Brakes, Front Air Cam; Wheels; Tires.
3ADB	SUSPENSION, FRONT, SPRING Parabolic, Taper Leaf; 10,000-lb Capacity; With Shock Absorbers
	Includes : SPRING PINS Bolt and Nut Type
	Notes : The following features should be considered when calculating Front GAWR: Front Axles; Front Suspension; Brake System; Brakes, Front Air Cam; Wheels; Tires.
4091	BRAKE SYSTEM, AIR Dual System for Straight Truck Applications
	Includes : BRAKE LINES Color and Size Coded Nylon : DRAIN VALVE Twist-Type : DUST SHIELDS, FRONT BRAKE : DUST SHIELDS, REAR BRAKE : GAUGE, AIR PRESSURE (2) Air 1 and Air 2 Gauges; Located in Instrument Cluster : PARKING BRAKE CONTROL Yellow Knob, Located on Instrument Panel : PARKING BRAKE VALVE For Truck : QUICK RELEASE VALVE Bendix On Rear Axle for Spring Brake Release: 1 for 4x2, 2 for 6x4 : SLACK ADJUSTERS, FRONT Automatic : SLACK ADJUSTERS, REAR Automatic : SPRING BRAKE MODULATOR VALVE R-7 for 4x2, SR-7 with relay valve for 6x4
	Notes : Rear Axle is Limited to 19,000-lb GAWR with Code 04091 BRAKE SYSTEM, AIR and Code 04NCL BRAKES, REAR, AIR CAM Regardless of Axle/Suspension Ordered.

EXHIBIT_____

Code	Description
	: Rear Axle is Limited to 20,000-lb GAWR with Code 04091 BRAKE SYSTEM, AIR and Code 04NCG BRAKES, REAR, AIR CAM Regardless of Axle/Suspension Ordered.
4722	DRAIN VALVE {Bendix DV-2} Automatic: With Heater, for Air Tank
	Includes : DRAIN VALVE Mounted in Wet Tank
4AZA	AIR BRAKE ABS {Bendix AntiLock Brake System} Full Vehicle Wheel Control System (4-Channel)
4EBS	AIR DRYER {Bendix AD-9} With Heater
4ESX	BRAKE CHAMBERS, FRONT AXLE {Haldex} 20 Sqln
4EVL	BRAKE CHAMBERS, REAR AXLE {Haldex GC3030LHDHO} 30/30 Spring Brake
	Includes : BRAKE CHAMBERS, SPRING (2) Rear Parking; WITH TRUCK BRAKES: All 4x2, 4x4; WITH TRACTOR BRAKES: All 4x2, 4x4; 6x4 & 6x6 with Rear Tandem Axles Less Than 46,000-lb. or GVWR Up To 54,000-lb.
4JCG	BRAKES, FRONT, AIR CAM S-Cam; 15.0" x 4.0"; Includes 20 Sq. In. Long Stroke Brake Chambers
	Notes : Front Axle with 14,000-lb GAWR is Limited to 13,200-lb GAWR when used in Conjunction with 15" BRAKES, FRONT, AIR CAM.
4NDB	BRAKES, REAR, AIR CAM S-Cam; 16.5" x 7.0"; Includes 30/30 Sq.In. Long Stroke Brake Chamber and Spring Actuated Parking Brake
	Notes : The following features should be considered when calculating Front GAWR: Front Axles; Front Suspension; Brake System; Brakes, Front Air Cam; Wheels; Tires.
4SBC	AIR COMPRESSOR {Bendix Tu-Flo 550} 13.2 CFM Capacity
5708	STEERING COLUMN Tilting
5CAL	STEERING WHEEL 2-Spoke, 18" Diam., Black
5PRR	STEERING GEAR {TRW (Ross) TAS-66} Power
7BDV	EXHAUST SYSTEM Single, Horizontal Aftertreatment Device Frame Mounted Right Side, Includes Long Horizontal Tail Pipe
	Includes : NOTE: The Horizontal Tailpipe Includes a Temperature Control Device
7WBK	TAIL PIPE Long Horizontal, Exits Right Side Through Bumper
8000	ELECTRICAL SYSTEM 12-Volt, Standard Equipment
	Includes : FUSES, ELECTRICAL SAE Blade-Type : HAZARD SWITCH Push On/Push Off, Located on Top of Steering Column Cover : HEADLIGHT DIMMER SWITCH Integral with Turn Signal Lever : MISCELLANEOUS FEATURES Modular, Loom Protected, Grommets in all Applicable Body Openings, Assembled in Computer Assisted Fixture which Verifies Continuity and Correct Assembly Prior to Installation : PARKING LIGHT Integral with Front Turn Signal and Rear Tail Light : STARTER SWITCH Electric, Key Operated : TURN SIGNAL FLASHER : TURN SIGNAL SWITCH Self-Cancelling with Lane Change Feature : TURN SIGNALS, FRONT Includes Reflectors; Flush Mounted : WINDSHIELD WIPER SWITCH 2-Speed with Wash and Intermittent Feature (5 Pre-Set Delays), Integral with Turn Signal Lever : WIRING, CHASSIS Color Coded and Continuously Numbered

EXHIBIT_____

Code	Description
8540	HORN, ELECTRIC (2)
8GWY	ALTERNATOR {Leece-Neville 14931PAH} Brush Type, 12 Volt 320 Amp. Capacity, Pad Mounted
8MKL	BATTERY SYSTEM {International} Maintenance-Free, (3) 12-Volt 1950CCA Total
8VZY	STARTING MOTOR {Leece-Neville M105R} 12 Volt; Less Thermal Over-Crank Protection
8WPB	HEADLIGHTS Halogen; Composite Aero Design for Two Light System; Includes Daytime Running Lights
8WWJ	INDICATOR, LOW COOLANT LEVEL With Audible Alarm
8XAH	CIRCUIT BREAKERS Manual-Reset (Main Panel) SAE Type III With Trip Indicators, Replaces All Fuses Except For 5-Amp Fuses
9WAB	HOOD TILT ASSIST {EASY TILT} Mechanical
9WAY	FRONT END Tilting, Fiberglass, With Three Piece Construction
	Includes : AIR INTAKE SYSTEM Integrated Pre-Cleaning System to Enhance Air Filter Life : GRILLE Removable; Fiberglass Painted Hood Color : SPLASH SHIELD Integral with Front End Assembly
10020	CHASSIS PAINT Full Chassis
10060	PAINT SCHEMATIC, PT-1 Single Color, Design 100
	Includes : PAINT SCHEMATIC ID LETTERS "NB"
10788	PAINT TYPE Urethane, One or Two Colors, Other than Imron or International.
11001	CLUTCH Omit Item (Clutch & Control)
12NUM	ENGINE, DIESEL {MaxxForce DT} EPA 10, 230 HP @ 2200 RPM, 660 lb-ft Torque @ 1300 RPM, 2400 RPM Governed Speed
	Includes : AIR COMPRESSOR AIR SUPPLY LINE Naturally-Aspirated : COLD STARTING EQUIPMENT Intake Manifold Electric Grid Heater with Engine ECM Control : CRUISE CONTROL Electronic; Controls Integral to Steering Wheel : ENGINE OIL DRAIN PLUG Magnetic : ENGINE SHUTDOWN Electric, Key Operated : FUEL FILTER Included with Fuel/Water Separator : FUEL/WATER SEPARATOR Fuel/Water Separator and Fuel Filter in a Single Assembly; With Water-in-Fuel Sensor; Engine Mounted : GOVERNOR Electronic : OIL FILTER, ENGINE Spin-On Type : WET TYPE CYLINDER SLEEVES
12TSY	FAN DRIVE {Borg-Warner SA85} Viscous Type, Screw On
	Includes : FAN Nylon
12UAY	RADIATOR Aluminum; 2-Row, Cross Flow, Over Under System, 817 Sqin Louvered, With 262 Sqin CAC, With In Tank Oil Cooler
	Includes : ANTI-FREEZE Red Shell Rotella Extended Life Coolant; -40 Degrees F/ -40 Degrees C; for MaxxForce Engines : DEAERATION SYSTEM with Surge Tank : HOSE CLAMPS, RADIATOR HOSES Gates Shrink Band Type; Thermoplastic Coolant Hose Clamps : RADIATOR HOSES Premium, Rubber

Vehicle Specifications
2011 INTEGRATED CE S BUS (PB105)

Code	Description
12UGN	THROTTLE, HAND CONTROL Electronic
	Notes : Cruise Control Switches Mounted on Steering Wheel are Non-Illuminated.
12UXG	FEDERAL EMISSIONS for 2010; MaxxForce DT Engines
12VBR	AIR CLEANER With Service Protection Element
	Includes : GAUGE, AIR CLEANER RESTRICTION Air Cleaner Mounted
12VVN	CRUISE CONTROL Electronic
	Notes : Cruise Control Switches Mounted on Steering Wheel are Non-Illuminated.
12VWH	GOVERNOR Electronic Road Speed Type; for International Electronic Engines and Bus Models; With 55 MPH Default
12WAK	ENGINE SOUND ABATEMENT PACKAGE Exterior, for International Engines With Underhood Blanket and Foam Covered Splash Shields.
12WZD	EMISSION COMPLIANCE Engine Shutdown System Exempt Vehicles, Complies With California Clean Air Regulations
13AMG	TRANSMISSION, AUTOMATIC {Allison 2500_PTS} 4th Generation Controls; Wide Ratio, 5-Speed, With Overdrive; Less PTO Provision, Less Retarder, With 33,000-lb GVW & GCW Max. School Bus
	Includes : OIL FILTER, TRANSMISSION Mounted on Transmission : TRANSMISSION OIL PAN Magnet in Oil Pan
13WYL	SHIFT CONTROL PARAMETERS Allison Performance Programming in Primary and Allison Economy Programming in Secondary
14AGM	AXLE, REAR, SINGLE {Dana Spicer 19060S} Single Reduction, 19,800-lb Capacity, 190 Wheel Ends . Gear Ratio: 5.29
	Includes : REAR AXLE DRAIN PLUG (1) Magnetic, For Single Rear Axle
	Notes : The following features should be considered when calculating Rear GAWR: Rear Axles; Rear Suspension; Brake System; Brakes, Rear Air Cam; Brake Shoes, Rear; Special Rating, GAWR; Wheels; Tires. : When Specifying Axle Ratio, Check Performance Guidelines and TCAPE for Startability and Performance
14SBK	SUSPENSION, RR, SPRING, SINGLE Two Stage, Vari-Rate; 19,800-lb Capacity
	Notes : The following features should be considered when calculating Rear GAWR: Rear Axles; Rear Suspension; Brake System; Brakes, Rear Air Cam; Brake Shoes, Rear; Special Rating, GAWR; Wheels; Tires.
14WAP	SHOCK ABSORBERS, REAR (2)
15LKG	FUEL/WATER SEPARATOR With Thermostatic Fuel Temperature Controlled Electric Heater, and Filter Restriction/Change Indicator, Includes Standard Equipment Water-in-Fuel Sensor
15SAL	FUEL TANK Top Draw; Rectangular Steel, 65 U.S. Gal., 246 L With Protective Cage, Mounted Right Side
	Notes : Requires 193" WB Min.
16010	COWL Flat Back
16HBA	GAUGE CLUSTER English With English Electronic Speedometer

Vehicle Specifications
2011 INTEGRATED CE S BUS (PB105)

Code	Description
	Includes : GAUGE CLUSTER (5) Engine Oil Pressure (Electronic), Water Temperature (Electronic), Fuel (Electronic), Tachometer (Electronic), Voltmeter : ODOMETER DISPLAY, Miles, Trip Miles, Engine Hours, Trip Hours, Fault Code Readout : WARNING SYSTEM Low Fuel, Low Oil Pressure, High Engine Coolant Temp, and Low Battery Voltage (Visual and Audible)
16HGH	GAUGE, OIL TEMP, ALLISON TRAN
16HKT	IP CLUSTER DISPLAY On Board Diagnostics Display of Fault Codes in Gauge Cluster
26DRA	WHEEL, SPARE, DISC 22.5" Painted Steel, 10 Stud (285.75MM BC Hub Piloted) 8.25 DC Rim
27DMA	WHEELS, FRONT DISC; 22.5" Painted Steel, 2 Hand Hole, 10 Stud (285.75MM BC) Hub Piloted, Flanged Nut, Metric Mount, 8.25 DC Rims; With Steel Hubs
	Includes : PAINT IDENTITY, FRONT WHEELS Black : WHEEL SEALS, FRONT Grease Lubricated, Includes Wheel Bearings
	Notes : Compatible Tire Sizes: 11R22.5, 12R22.5, 255/70R22.5, 255/80R22.5, 265/75R22.5, 275/70R22.5, 275/80R22.5, 295/75R22.5, 295/80R22.5
28DMA	WHEELS, REAR DUAL DISC; 22.5" Painted Steel, 2 Hand Hole, 10-Stud (285.75MM BC) Hub Piloted, Flanged Nut, Metric Mount, 8.25 DC Rims; With Steel Hubs
	Includes : PAINT IDENTITY, REAR WHEELS Black : WHEEL SEALS, REAR Oil Lubricated, Includes Wheel Bearings
	Notes : Compatible Tire Sizes: 11R22.5, 12R22.5, 255/70R22.5, 255/80R22.5, 265/75R22.5, 275/70R22.5, 275/80R22.5, 295/75R22.5, 295/80R22.5
29580	WHEEL SEALS, FRONT (International) Oil-Lubricated Wheel Bearings
47AGK	BODY, BUS Conventional; 78" Headroom, 34'2" Body Length, 77 Passenger, 276" WB
47AJA	BODY CERTIFICATION TAG Metal
47AJC	BODY TAG, METAL
47AJW	STEP, FRONT ENTRANCE DOOR 27 1/4" Depth; 14ga Steel
	Includes : STEP, FRONT ENTRANCE DOOR OPENING, 35 Inch Width; Continuous Bottom to Top
47AMA	FASTENERS, EXTERIOR MOUNTED Stainless Steel Screws; for Fender and Body Exterior Rear View Mirrors, Bumper Mounted Crossing Gate and Body Mounted Stop Arm
47APJ	BODY RATING TAG Metal; for State of Texas, Includes Design Capacity and Seat Capacity
47APR	HEADLINER, BODY Conventional; 25'11"-34'11" Body Length, Perforated Full Length With Sound Insulation Full Length
47APX	FASTENERS, HEADLINER Screws
47ARH	BOWS, ROOF 14 ga., One Piece Construction
	Includes : BOWS, ROOF Positioned Floor Line to Floor Line, Threaded Through Roof Strainers and Drip Rail
47ARP	LIGHT BARS Plastic
47ASG	SKIRT, BODY for Conventional, 14 1/2", 16ga

Vehicle Specifications
2011 INTEGRATED CE S BUS (PB105)

Code	Description
	Includes : SKIRT, BODY Extra Smooth Steel Supported by Floor Gussets
47AUR	TIE DOWNS, BODY Grade 8 Bolts, Every Body Section
	Includes : TIE DOWNS, BODY with Formed Tab that Fits into Floor Structure to Prevent Turning
47AXT	RUB RAILS, BODY (4) Conventional; Steel, 31'2", 31'11", 32'8", 33'5", 34'2", 34'11", Body Length, Includes Snow Rail
	Includes : RUB RAILS Full Length, Primer Coated (Both Sides), Attached to Body without Cuts or Splices
47AYB	BODY, REAR Includes Emergency Door
	Includes : DOOR, REAR EMERGENCY with Concealed Hinges
47AZE	SIDE SHEET, BODY, EXTERIOR Conventional, 16ga., Smooth, 31'2", 31'11", 32'8", 33'5", 34'2", 34'11", Body Length
47AZL	FLOOR, BODY With Wheel Wells
47BAR	SUPPORTS, REAR BUMPER Bolted to Frame
47BAU	BUMPER, REAR Painted; 12" High, 3/16" Thick, With 7" Hole for Exhaust
47BAW	TOW HOOK, LEFT REAR (01)
47BAX	TOW HOOK, RIGHT REAR (01)
47BBH	LINING, SIDE INTERIOR, LOWER Embossed Steel, Clear Coated
47BBN	HANDLE, ASSIST, OVER WINDSHLD Body Color
47BCE	TIRE CARRIER Winch Type; Mounted Rear of Frame, Center
47BEX	SEALER Water-proof Sealer on all Floor Covering Seams
47DAJ	COVER, REAR DOOR INSIDE HANDLE Partial Coverage
47DAK	FASTENERS, REAR DOOR Bolts and Nutserts, Rear Door To Body
47DBP	DOOR, ENTRANCE, FRONT Air, Outward Opening, With Split Pane Glass
	Includes : DOOR, ENTRANCE, FRONT Aluminum Frame with Pin Style Hinges, Ball Bearing Assisted, Interchangeable Top and Bottom Glass
47DDE	HANDLE, ASSIST, ENTRANCE DOOR Outside Entrance
47DDH	HOLD BACK, REAR DOOR Stationary, No Cables, With Plastic Cover
47DDU	LATCH, REAR DOOR One Point Slide Bar, Cam Operated, With One Inch Stroke
47DEY	HANDLE, EXTERIOR, REAR Emergency Door; Yellow
47DNK	SWITCH, LOCATION Steering Wheel; Includes Master Flasher, Flasher ON/OFF, Red Override, and Door Control
	Includes : SWITCH, STEERING WHEEL, LIGHT Includes Illuminated Switches
47EAA	COMPARTMENT, BATTERY Mounted Behind Left Front Wheel Pocket, 13" x 15" x 25.5"
	Includes : BATTERY TRAY 14-1/2" x 24-3/4" Slide Out Tray with Nylon Rollers and Stops

EXHIBIT_____

Vehicle Specifications
2011 INTEGRATED CE S BUS (PB105)

Code	Description
	: DOOR - COMPARTMENT with Pin Style Hinge
47EBM	HOLD DOWN, BATTERY For (2) Standard Size Batteries
47ECS	COMPARTMENT, TOOL, FWD LEFT Aft of Standard Battery Box, Key Lock, 13"x 15"x 25 1/2"
47LAB	NOISE REDUCTION, DRIVER FLOOR Insulation Covering Complete Driver Floor Area
47LAT	NOISE REDUCTION, ROOF BOW Conventional; Insulation, 31'2", 31'11", 32'8", 33'5", 34'2", 34'11", Body Lengths
47LAU	INSULATION, ROOF AND SIDES 1.50", All Models
47MAH	MONITOR, POST TRIP INSPECTION {Leave No Student Behind} Accessory Controlled, With Alarm Disable at Rear of Bus; Prompts Driver to Walk to Back of Bus and Open Emergency Door to Deactivate System
47MAV	LETTERS, SCHOOL BUS SIDE Decal; "SCHOOL BUS"; in 8" Reflective Black Letters, Each Side
47MBA	UNDERCOAT, BODY Fire Resistant, Water Based, TT-C-730 Spec
	Includes : UNDERCOATING Performed Before and After Mounting on Chassis
47MJR	LETTERS, DOOR, REAR Decals; "EMERGENCY DOOR", 2" Black Letters Inside and Outside
47MNS	ARROW, RR DOOR, INSIDE Decal; Black, .75" Stroke, Indicating Handle Direction
47MPD	LETTERS, SCHOOL BUS FRONT/REAR Decal; "SCHOOL BUS"; With 8" Black Reflective Letters, Reflexite V82, On Front and Rear Cap
47MRU	LETTERS, K/O WINDOW, LEFT (2) Decal Sets, "EMERGENCY EXIT", Black Inside and Outside
47MTY	WIRING DIAGRAM Schematic, Electrical
	Includes : ACCESS PANEL for Wiring Diagram Schematic Located on Body Exterior; Below Driver Window
47MVA	LETTERS, HEADER Decal; "WATCH YOUR STEP", 1" Black, Above Windshield
47MVC	LETTERS, STEPWELL Decal, "WATCH YOUR STEP", 2.5" Black, Behind Door on Step Riser
47NAB	PAINT RUB RAILS 0001 Canyon Black
47NGP	LETTERS, FUEL I.D. Paint; "DIESEL FUEL", 2" Black, Adjacent to Fuel Filler Door
47NGW	SEAL, RUB RAILS Top Edge, All Rails
47NHB	PLATE INSTR, LT. K/O WINDOW (2) Mounted Under Window
47NHL	LETTERS, K/O WINDOW, RIGHT (2) Decal Sets, "EMERGENCY EXIT", Black, Inside and Outside
47NHW	PLATE INSTR, RT. K/O WINDOW (2) Mounted Under Window
47NJA	PAINT COLOR, BODY EXTERIOR 4421 Yellow, SBNS
47NJM	PAINT FLASHER BACKGRD 0001 Canyon Black
47NJS	PAINT COLOR, BUMPER Rear; 0001 Canyon Black
47NKC	PAINT COLOR, ROOF 9219 Winter White
47NKL	PAINT, RUB RAIL Flange to Flange
47NKM	PAINT COLOR, BODY INTERIOR 9384 Spring White
47NMG	OPERATING INSTR, REAR Decal, Inside Rear Emergency Door
47NTE	LOGO, ROOF LINE Decal; Wing and Shield, First Body Section, Above Driver Window and Entrance Door Over Driver Window and Entrance Door

EXHIBIT_____

Vehicle Specifications
2011 INTEGRATED CE S BUS (PB105)

Code	Description
47NWH	STRIPING, ROOF HATCH, REAR Decal, Perimeter, 1", Yellow, 3M Fluorescent Diamond Grade
47NWJ	STRIPING, SEATLINE {3M} 2" Yellow, Fluorescent Diamond Grade
47NWR	STRIPING, REAR END {3M} 2" Yellow Fluorescent Diamond Grade
47NWT	STRIPING, ROOF HATCH, FRONT {3M} Decal, Perimeter, 1", Yellow Fluorescent Diamond Grade
47NWU	STRIPING, K/O WINDOW, RIGHT (2) Perimeter, 1" 3M Yellow Fluorescent Diamond Grade
47NXH	STRIPING, K/O WINDOW, LEFT (2) {3M} Perimeter, 1" Yellow Fluorescent Diamond Grade
47NXN	STRIPING, PERIMETER, REAR Emergency Door; 1" Wide, 3M Fluroescent Diamond Grade, Yellow
47SBS	SUB FLOOR, PLYWOOD Conventional; B-C Exterior Grade, Less Sealed Edges, 5/8", 5 Ply, for 31'2",31'11", 32'8",33'5", 34'2", 34'11", Body Length
47SPB	ALPHA/NUMERIC DECAL GUIDE Quantity 021-30
48ANE	WINDOW, ENTRANCE DOOR, TOP Laminated, Clear
48ANM	WINDOW, ENTRANCE DOOR, BOTTOM Laminated, Clear
48ANT	WINDOW, DRIVER Laminated, Clear
48APL	WINDOW, STOPS 12" Opening, Only With 78" Headroom
48ARW	WINDOW, SASH (22) 27" Sections, 9"x 23" Opening
48AUN	WINDOW, PASSENGER, TINT Conventional; 28% Light, Laminated Glass, 78" Headroom, With 31'2", 31'11", 32'8", 33'5", 34'2", 34'11", Body Length
48BAB	WINDOW, K/O, LEFT (2) Horizontal Hinge
48BJA	COLOR, WINDOW FRAME, PASS Passenger Window, Natural Aluminum Finish
48BKB	WINDOW, K/O, RIGHT (2) Horizontal Hinge
48BXD	SEAT,UCRA,LT,39",2 LEG (02); With 2 UCRA Position per Seat
48BXV	SEAT,UCRA,RT,39",2 LEG (02); With 2 UCRA Position per Seat
48GHD	SEAT BELT, DRIVER, COLOR With Black Seat Belt Webbing
48NAT	FITTINGS, AIR SEAT for Driver Seat
48PAM	WINDSHIELD 3 Flat Pieces, 73% Light, With Band
48PAV	WHEEL POCKET COVER Plastic, ABS
48PAY	AISLE POSITION Center, for balanced seating
48PBB	FLOOR COVERING, COLOR Black
48PHR	UPHOLSTERY, PASS SEATS, TYPE Prevaill, 42 oz.; for (25-26) Seats
48PJR	FLOOR COVERING, TRIM Aluminum
48PJZ	FLOOR COVERING, TYPE {Koroseal} All Body Lengths
48PKC	CLAMPS, HEATER HOSE Constant Torque for Heater System
48PLA	FILTER, HEATER AIR, DRIVER Heater, Conventional
48PLG	FILTER, HEATER AIR, LEFT REAR For Passenger Heater, 84,000 BTU
48PLW	HEATER, DRIVER 90,000 BTU, and Defroster Hot Water Type
	Includes

EXHIBIT_____

Vehicle Specifications
2011 INTEGRATED CE S BUS (PB105)

Code	Description
	: AIR FILTER : CLAMPS, HEATER HOSE Mubea Constant Tension Clamps : HEATER HOSES Premium
48PMJ	HEATER, PASS, LT REAR 84,500 BTU
	Includes : AIR FILTER
48PNW	HEATER, WATER PUMP {2MPU 12} Self Priming, With Plastic Housing
48PPC	SWITCH, HTR FAN, REAR, LT With 84,500 BTU Rear Heater Only
48PPM	HEATER CUT OFF, VALVE Ball, With Butterfly Handle
48PPP	HEATER CUT OFF, VALVE INSIDE Brass Ball, Inside Forward of Driver Heater
48PPS	ROOF VENT, FRONT Static
48PUT	NUTS, BELT MOUNTING Standard Nuts For Seat Belt Mounting
48PVA	UPHOLSTERY, DRIVER SEAT, STYLE Plain, With Cloth Insert
48PVN	UPHOLSTERY, DRIVER SEAT, COLOR Drivers Seat, Gray
48PWD	UPHOLSTERY, PASS SEATS, COLOR Gray, for Seats, Barriers and Head Bumpers
48PWR	UPHOLSTERY, DRIVER SEAT, TYPE Prevail, 42 oz.
48PXP	UPHOLSTERY, BARRIER, TYPE (1-2) Prevaill, 42 oz.
48RAE	BARRIER, CRASH, AFT ENTRY DOOR 39", 1 Leg
48RAL	BARRIER, CRASH, AFT DRIVER 39", 1 Leg
48RGE	HAND RAIL, ENTRANCE DOOR, FWD Stainless Steel; Curved
48RGR	HAND RAIL, ENTRANCE DOOR, AFT Stainless Steel, 4", Above Step
48RLX	CUSHION, SEAT 15" Depth
	Includes : WARRANTY Four Years
48RRA	UPHOLSTERY, SEAT, STITCHING Single
	Includes : WARRANTY Two Years
48RYW	SEAT, DRIVER {National 2000} Air Suspension, High Back With Integral Headrest, Cloth, Isolated, With 2 Position Front Cushion Adjustment, 6 to 17 Degree Seat Back Adjustment, Mechanical Lumbar Support, Includes Additional Back Padding For School Bus Use
48RZJ	STEP TREADS {Koroseal} Pebble Top With White Nosing, With Non-Metal Backing
48SAD	SEAT,PASS,LT,26",2 LEG (01)
48SDT	SEAT,PASS,LT,39",2 LEG (10)
48SKM	SEAT,PASS,RT,39",2 LEG (11)
48UCP	ROOF HATCH, FRONT {Transpec 1975-028-121-03} With Outside Release, With English Decals
48UCR	ROOF HATCH, REAR {Transpec 1975-028-121-03} With Outside Release, With English Decals
48USV	SEAT BACK, PASSENGER High Back
49143	BODY PLAN, APPROVED VARIATION Number 143

EXHIBIT_____

Vehicle Specifications
2011 INTEGRATED CE S BUS (PB105)

Code	Description
49AHP	LIGHT, STROBE, REAR Low Profile, Self-Contained, Double Flash 1st Section Above Rear Window
49AJH	CONNECTION, LIGHTS Cluster, Clearance and Side Marker To Tail Lights
49ALW	LIGHTS, ASIDE FRONT DOOR Exterior, 4" Lights Upper Portion Shield, Wired to Clearance Lights
49AMB	WIRE, FEED 4 Gauge, Chassis To Body
49AMD	SWITCH, DRIVER PANEL, TYPE Rocker
49AMJ	ALARM, BACKING (Ecco #575) 107 db
49AML	SWITCH, REAR DOOR BUZZER Rear Door With Knob, for State of Texas
49AMT	CIRCUIT, PROTECTION Breakers, Manual Reset in Lieu of Fuses
	Includes : ACCESS PANEL for Body and Chassis Fuses/Circuit Breakers Located on Body Exterior; Below Driver Window
49ANH	SWITCH, MAGNETIC, DISCONNECT Master, Ignition Operated, All Body Circuits
49APA	LIGHT, DRIVER, CEILING With Separate Switch, Mounted in Light Bar
49APZ	LIGHTS, DOME Conventional; Two Full Rows Rectangular Recessed Dome Lights, 31'2", 31'11", 32'8", 33' 5", 34'2", 34'11", Body Length
	Includes : WIRING HARNESS Main Body Wiring Harness Accessed by Removing Dome Light
49ARN	LIGHT, STEP Wired to Clearance Lights
49AWS	SPEAKERS AND WIRING (2) Flush Mounted in Light Bar
49BCN	FLASHER SYSTEM (8) Warning Lights, 8-Lamp System, Electronic Relay Flasher, Non-Sequential Operation, Red Lights Activate With Door Open
49BCR	LIGHT, EXTERIOR, CHECK Automatically Activates Lights for Pre Trip Inspection
49BEJ	RADIO, ENTERTAINMENT (Panasonic) AM/FM/CD Stereo, Includes Antenna and Cable, Four Speakers, With Public Adress System
49BGN	SWITCH, RED, OVERRIDE WARNING Wired Hot, With ESC
49BGW	MIRROR, CROSS VIEW, EXTERIOR (Mirror Lite Safety Cross New Busboy) for Left & Right Side; Black
49BKG	LIGHTS, STOP (2) (Sound Off ECV7561SST) and Tail; 7", LED, Red
49BKH	LIGHTS, DIRECTIONAL, REAR (2) (Sound Off ECV7561ITY) LED, 7" Amber
49BKJ	LIGHTS, MARKER, FRONT, REAR (Sound Off ECVML153Y&R) LED, Armored, (8) Four Amber Front and Four Red Rear
49DAG	LIGHT, INDIC, WARNING LIGHTS LED Type; Red and Amber
49DBR	HOOD, WARNING LAMP (4) Black, 8-Lamp System, One Hood Above Two Lights
49EAE	LIGHTS, MARKER, SIDE (Sound Off EVCML153Y) LED, Armored Type, Intermediate, Centered; Required for Units 30 Foot or Longer
49EAG	LIGHTS, DIRECTIONAL, SIDE (4) (Sound Off ECVML153Y) Armored, 2 Each Side First Section Aft Entrance Door & Forward Rear Wheel Pocket
49EBA	KIT, FIRST AID Plastic; 24 Unit, Spec State
49EEW	STOP ARM, LEFT REAR (Specialty) Electric, 18" Octagon, Single Sided, 1/2" White Border, Hi Intensity Grade, Flashing RED Incandescent Lights

EXHIBIT_____

Code	Description
49EEX	STOP ARM, FRONT {Specialty} Electric, 18" Octagon, Double Sided, 1/2" White Border, Hi Intensity, Flashing RED Incandescent Lights
49EGB	MIRROR, INSIDE 10" x 30", Clear
49ENK	VISOR, INTERIOR, LEFT FRONT 6" x 30", Transparent, For Left Windshield
49EVL	SWITCH, NOISE SUPPRESSION Actuator Legend States, "NOISE SUPP ", for Separate Solenoid, With Red Switch in Panel
49EYB	MIRROR, REAR VIEW, EXTERIOR {Rosco 717} Single Arm Breakaway Bracket, Motorized Head, Stainless Steel, Overhang Type
49GAY	KIT, BODY FLUID Texas
49GBV	WINDSHIELD WIPERS (2) Cowl Mounted
	Includes : WINDSHIELD WIPERS CONTROL Single Motor, Overlapping Wipe Pattern
49GEH	SAFETY TRIANGLES Warning Reflectors, Mounted on Drivers Barrier Level With Top of a Modesty Shield
49GGE	FIRE EXTINGUISHER, DRIVER AREA 5 lb 2A-40BC Minimum With Flexible Hose and Metal Nozzle
49GKZ	FUEL FILLER DOOR With Non-Locking Latch
49GLA	REFLECTORS, SIDE, INTERMEDIATE (2) 3" Amber, 1 Each Side, Mounted With Screws, Below The Third Rub Rail From the Top
49GLG	REFLECTORS, SIDE, REAR (2) 3", Red, Mounted With Screws
49GLM	REFLECTORS, SIDE, FRONT (2) 3", Amber; 1 Aft Drivers Window Left, 1 Aft Entrance Door Right, Mounted With Screws
49GLP	REFLECTORS, REAR (2) 3", Red, Mounted With Screws
49GRG	LIGHT, LICENSE PLATE {Sound Off ECVLPBLED} LED, With Mounting Gasket
49GRS	LIGHTS, CLUSTER {Sound Off ATCVMLDP1R & ATCVMLDP1Y} LED; Amber Front and Red Rear
49GUB	CUTTER, SEAT BELT {Safecut} for Cutting Seat Belts
49GUM	INSPECTION PLATE 5" Dia. Steel
49GWW	WINDSHIELD WASHER Kit; 6 Quart Capacity, Bottle
	Includes : WINDSHIELD WASHER ELECTRICAL CONNECTIONS Sealed and Locking Type
49HES	MIRROR, BRACE, EXTERIOR Telescoping for Breakaway Bracket
49MYH	LIGHTS, WARNING (8) {Sound Off} (4) 7" Red Flashing LED and (4) 7" Amber Flashing LED, 2 Front, 2 Rear Each Color
49UBZ	STATE OF OPERATION Texas
49XHP	LIGHTS, STOP & TAIL ADDITIONAL (2) {Sound Off} Red, LED, 4" Diameter, With Flange
49XJJ	LIGHTS, BACK UP (2) {Sound Off} White, LED, 4" Diameter, With Flange
7372130155	(2) TIRE, FRONT 11R22.5 G149 RSA/RH (GOODYEAR) 501 rev/mile, load range G, 14 ply
7372130155	(4) TIRE, REAR 11R22.5 G149 RSA/RH (GOODYEAR) 501 rev/mile, load range G, 14 ply
OBD001	BODY PLAN, NON-SPECIAL NEEDS PB10500 34FT 2IN CAP 77 LHORN 718

Services Section:

EXHIBIT_____

Vehicle Specifications
2011 INTEGRATED CE S BUS (PB105)

Code	Description
40BVM	SRV CONTRACT, EXT VEH COVERAGE 24 Month/Unlimited Miles ; With 90-Day Towing; Covers 100% Parts and Labor; Includes Body; Excludes Extending Warranty for Engine, Transmission, Frame Side Rails, Perforation or Corrosion of Cab/Cowl Structure and Paint
40CGJ	SERVICES, TOWING To 36-Month/150,000 Miles (240,000 km), Service Call to the Vehicle or Towing to the Nearest International Dealership for a Non-Drivable Unit in Conjunction with an International Warrantable Failure; $500 (USA) Maximum Benefit per Incident
49GVN	WARRANTY 5-Year, Limited
	ECHO FUEL ENHANCEMENT
	AIR CONDITIONING 126,000 BTU
	CAMERA SYSTEM
	2-WAY RADIO

EXHIBIT_____

August 26, 2010

Financial Summary
2011 INTEGRATED CE S BUS (PB105)

(USA DOLLAR)

Description	Price
Net Sales Price:	$728,160.00

Please feel free to contact me regarding these specifications should your interests or needs change. I am confident you will be pleased with the quality and service of an IC Corporation vehicle.

Approved by Seller:

Sales Manager 8-26-2010
Official Title and Date

Authorized Signature

This proposal is not binding upon the seller without Seller's Authorized Signature

Accepted by Purchaser:

Firm or Business Name

Authorized Signature and Date

Official Title and Date

Proposal: 2718-01

EXHIBIT_____

August 26, 2010

Prepared For:
Edinburg CISD

Drawer 990
Edinburg, TX 78540-
(956)316 - 7230
Reference ID: 53 LIFT

Presented By:
LONGHORN BUS SALES
Christi H Smith
6921 HOMESTEAD ROAD
HOUSTON TX 77028 -
(713)631-9306

Thank you for the opportunity to provide you with the following quotation on a new IC Corporation vehicle. I am sure the following detailed specification will meet your operational requirements, and I look forward to serving your business needs.

Model Profile
2011 INTEGRATED CE S BUS (PB105)

APPLICATION:	School Transportation, Special Needs
MISSION:	Requested GVWR: 25500. Calc. GVWR: 25500 Calc. Start / Grade Ability: 25.50% / 3.03% @ 55 MPH Calc. Geared Speed: 74.3 MPH
FUEL ECONOMY:	9.1 MPG @ 55 MPH
DIMENSION:	Wheelbase: 217.00, CA: N/A, Axle to Frame: 117.00
ENGINE, DIESEL:	{MaxxForce DT} EPA 10, 230 HP @ 2200 RPM, 660 lb-ft Torque @ 1300 RPM, 2400 RPM Governed Speed
TRANSMISSION, AUTOMATIC:	{Allison 2500_PTS} 4th Generation Controls; Wide Ratio, 5-Speed, With Overdrive; Less PTO Provision, Less Retarder, With 33,000-lb GVW & GCW Max. School Bus
CLUTCH:	Omit Item (Clutch & Control)
AXLE, FRONT NON-DRIVING:	{Dana Spicer D800-F} I-Beam Type, 8,000-lb Capacity
AXLE, REAR, SINGLE:	{Dana Spicer 17060S} Single Reduction, 17,500-lb Capacity, 190 Wheel Ends Gear Ratio: 4.63
TIRE, FRONT:	(2) 255/70R22.5 G169 RSA (GOODYEAR) 566 rev/mile, load range H, 16 ply
TIRE, REAR:	(4) 255/70R22.5 G169 RSA (GOODYEAR) 566 rev/mile, load range H, 16 ply
SUSPENSION, REAR, AIR, SINGLE:	{International} Ride Optimized Suspension (IROS); 21,000-lb Capacity, 9.25" Ride Height, With Shock Absorbers
PAINT:	Cab schematic 100NB Location 1: 4421, School Bus Yellow (Std) Chassis schematic N/A

Proposal: 2721-01

EXHIBIT_____

Code	Description
PB10500	Base Chassis, Model INTEGRATED CE S BUS with 217.00 Wheelbase, N/A CA, and 117.00 Axle to Frame.
1570	TOW HOOK, FRONT (2) Frame Mounted
1CAC	FRAME RAILS High Strength Low Alloy Steel (50,000 PSI Yield); 10.125" x 3.062" x 0.312" (257.2mm x 77.8mm x 8.0mm); 480.1" (12195mm) Maximum OAL Includes : CHASSIS PAINT Chassis Painted Prior to Body Mounting : FRAME RAILS All holes Laser Aligned and Machine Punched, Powder Coated Prior to Full Assembly, Assembled in Fixture using "Grade 8" Bolts : FRAME REINFORCEMENT, SPECIAL 3.30" x 1.80" x 0.312" x 31.50" Inverted "L" in Front Shock Absorber Mounting Area
1LLE	BUMPER, FRONT Full Width, Aerodynamic, Heavy Duty, Steel Includes : BUMPER, FRONT THICKNESS 1/4 Inch
1LNT	CROSSING GATE, FRONT Omit Item Includes : CROSSING GATE, FRONT Matches Contour of Bumper
1SAM	CROSSMEMBER, REAR, AF (2)
1WHT	WHEELBASE RANGE 193" (490cm) Through and Including 217" (550cm)
2AEM	AXLE, FRONT NON-DRIVING {Dana Spicer D800-F} I-Beam Type, 8,000-lb Capacity Includes : AXLE, FRONT SQUARING to Plus or Minus .015 Inch, using a Special Fixture to Assure Parallelism of Springs Notes : The following features should be considered when calculating Front GAWR: Front Axles; Front Suspension; Brake System; Brakes, Front Air Cam; Wheels; Tires.
3ADA	SUSPENSION, FRONT, SPRING Parabolic, Taper Leaf; 8,000-lb Capacity; With Shock Absorbers Includes : SPRING PINS Bolt and Nut Type Notes : The following features should be considered when calculating Front GAWR: Front Axles; Front Suspension; Brake System; Brakes, Front Air Cam; Wheels; Tires.
4091	BRAKE SYSTEM, AIR Dual System for Straight Truck Applications Includes : BRAKE LINES Color and Size Coded Nylon : DRAIN VALVE Twist-Type : DUST SHIELDS, FRONT BRAKE : DUST SHIELDS, REAR BRAKE : GAUGE, AIR PRESSURE (2) Air 1 and Air 2 Gauges; Located in Instrument Cluster : PARKING BRAKE CONTROL Yellow Knob, Located on Instrument Panel : PARKING BRAKE VALVE For Truck : QUICK RELEASE VALVE Bendix On Rear Axle for Spring Brake Release: 1 for 4x2, 2 for 6x4 : SLACK ADJUSTERS, FRONT Automatic : SLACK ADJUSTERS, REAR Automatic : SPRING BRAKE MODULATOR VALVE R-7 for 4x2, SR-7 with relay valve for 6x4 Notes : Rear Axle is Limited to 19,000-lb GAWR with Code 04091 BRAKE SYSTEM, AIR and Code 04NCL BRAKES, REAR, AIR CAM Regardless of Axle/Suspension Ordered.

EXHIBIT_____

Code	Description
	: Rear Axle is Limited to 20,000-lb GAWR with Code 04091 BRAKE SYSTEM, AIR and Code 04NCG BRAKES, REAR, AIR CAM Regardless of Axle/Suspension Ordered.
4722	DRAIN VALVE {Bendix DV-2} Automatic; With Heater; for Air Tank
	Includes : DRAIN VALVE Mounted in Wet Tank
4AZA	AIR BRAKE ABS {Bendix AntiLock Brake System} Full Vehicle Wheel Control System (4-Channel)
4EBS	AIR DRYER {Bendix AD-9} With Heater
4ESX	BRAKE CHAMBERS, FRONT AXLE {Haldex} 20 Sqin
4EVL	BRAKE CHAMBERS, REAR AXLE {Haldex GC3030LHDHO} 30/30 Spring Brake
	Includes : BRAKE CHAMBERS, SPRING (2) Rear Parking; WITH TRUCK BRAKES: All 4x2, 4x4; WITH TRACTOR BRAKES: All 4x2, 4x4; 6x4 & 6x6 with Rear Tandem Axles Less Than 46,000-lb. or GVWR Up To 54,000-lb.
4JCH	BRAKES, FRONT, AIR CAM S-Cam; 15.0" x 5.0"; Includes 20 Sq. In. Long Stroke Brake Chambers
	Notes : Front Axle with 14,000-lb GAWR is Limited to 13,200-lb GAWR when used in Conjunction with 15" BRAKES, FRONT, AIR CAM.
4NDB	BRAKES, REAR, AIR CAM S-Cam; 16.5" x 7.0"; Includes 30/30 Sq.In. Long Stroke Brake Chamber and Spring Actuated Parking Brake
	Notes : The following features should be considered when calculating Front GAWR: Front Axles; Front Suspension; Brake System; Brakes, Front Air Cam; Wheels; Tires.
4SBC	AIR COMPRESSOR {Bendix Tu-Flo 550} 13.2 CFM Capacity
4WEA	PARKING BRAKE INTERLOCK Parking Brake Cannot be Released until Ignition Switch is in the "ON" Position and the Service Brake Pedal is Applied, Use with air brake chassis only.
5708	STEERING COLUMN Tilting
5CAL	STEERING WHEEL 2-Spoke, 18" Diam., Black
5PRG	STEERING GEAR {TRW (Ross) TAS-40} Power
7BDV	EXHAUST SYSTEM Single, Horizontal Aftertreatment Device Frame Mounted Right Side, Includes Long Horizontal Tail Pipe
	Includes : NOTE: The Horizontal Tailpipe Includes a Temperature Control Device
7WBL	TAIL PIPE Long Horizontal, Exits Left Side Through Bumper
8000	ELECTRICAL SYSTEM 12-Volt, Standard Equipment
	Includes : FUSES, ELECTRICAL SAE Blade-Type : HAZARD SWITCH Push On/Push Off, Located on Top of Steering Column Cover : HEADLIGHT DIMMER SWITCH Integral with Turn Signal Lever : MISCELLANEOUS FEATURES Modular, Loom Protected, Grommets in all Applicable Body Openings, Assembled in Computer Assisted Fixture which Verifies Continuity and Correct Assembly Prior to Installation : PARKING LIGHT Integral with Front Turn Signal and Rear Tail Light : STARTER SWITCH Electric, Key Operated : TURN SIGNAL FLASHER : TURN SIGNAL SWITCH Self-Cancelling with Lane Change Feature : TURN SIGNALS, FRONT Includes Reflectors; Flush Mounted

EXHIBIT_____

Code	Description
	: WINDSHIELD WIPER SWITCH 2-Speed with Wash and Intermittent Feature (5 Pre-Set Delays), Integral with Turn Signal Lever : WIRING, CHASSIS Color Coded and Continuously Numbered
8540	HORN, ELECTRIC (2)
8GWY	ALTERNATOR {Leece-Neville 14931PAH} Brush Type, 12 Volt 320 Amp. Capacity, Pad Mounted
8MKL	BATTERY SYSTEM {International} Maintenance-Free, (3) 12-Volt 1950CCA Total
8VZY	STARTING MOTOR {Leece-Neville M105R} 12 Volt; Less Thermal Over-Crank Protection
8WPB	HEADLIGHTS Halogen; Composite Aero Design for Two Light System; Includes Daytime Running Lights
8WWJ	INDICATOR, LOW COOLANT LEVEL With Audible Alarm
8XAH	CIRCUIT BREAKERS Manual-Reset (Main Panel) SAE Type III With Trip Indicators, Replaces All Fuses Except For 5-Amp Fuses
9WAB	HOOD TILT ASSIST {EASY TILT} Mechanical
9WAY	FRONT END Tilting, Fiberglass, With Three Piece Construction
	Includes : AIR INTAKE SYSTEM Integrated Pre-Cleaning System to Enhance Air Filter Life : GRILLE Removable; Fiberglass Painted Hood Color : SPLASH SHIELD Integral with Front End Assembly
10020	CHASSIS PAINT Full Chassis
10060	PAINT SCHEMATIC, PT-1 Single Color, Design 100
	Includes : PAINT SCHEMATIC ID LETTERS "NB"
10788	PAINT TYPE Urethane, One or Two Colors, Other than Imron or International.
11001	CLUTCH Omit Item (Clutch & Control)
12NUM	ENGINE, DIESEL {MaxxForce DT} EPA 10, 230 HP @ 2200 RPM, 660 lb-ft Torque @ 1300 RPM, 2400 RPM Governed Speed
	Includes : AIR COMPRESSOR AIR SUPPLY LINE Naturally-Aspirated : COLD STARTING EQUIPMENT Intake Manifold Electric Grid Heater with Engine ECM Control : CRUISE CONTROL Electronic; Controls Integral to Steering Wheel : ENGINE OIL DRAIN PLUG Magnetic : ENGINE SHUTDOWN Electric, Key Operated : FUEL FILTER Included with Fuel/Water Separator : FUEL/WATER SEPARATOR Fuel/Water Separator and Fuel Filter in a Single Assembly; With Water-in-Fuel Sensor; Engine Mounted : GOVERNOR Electronic : OIL FILTER, ENGINE Spin-On Type : WET TYPE CYLINDER SLEEVES
12TSY	FAN DRIVE {Borg-Warner SA85} Viscous Type, Screw On
	Includes : FAN Nylon
12UAY	RADIATOR Aluminum; 2-Row, Cross Flow, Over Under System, 817 SqIn Louvered, With 262 SqIn CAC, With In Tank Oil Cooler
	Includes

EXHIBIT_____

Code	Description
	: ANTI-FREEZE Red Shell Rotella Extended Life Coolant; -40 Degrees F/ -40 Degrees C; for MaxxForce Engines : DEAERATION SYSTEM with Surge Tank : HOSE CLAMPS, RADIATOR HOSES Gates Shrink Band Type; Thermoplastic Coolant Hose Clamps : RADIATOR HOSES Premium, Rubber
12UGN	THROTTLE, HAND CONTROL Electronic
	Notes : Cruise Control Switches Mounted on Steering Wheel are Non-Illuminated.
12UXG	FEDERAL EMISSIONS for 2010; MaxxForce DT Engines
12VBR	AIR CLEANER With Service Protection Element
	Includes : GAUGE, AIR CLEANER RESTRICTION Air Cleaner Mounted
12VVN	CRUISE CONTROL Electronic
	Notes : Cruise Control Switches Mounted on Steering Wheel are Non-Illuminated.
12VWH	GOVERNOR Electronic Road Speed Type; for International Electronic Engines and Bus Models; With 55 MPH Default
12WAK	ENGINE SOUND ABATEMENT PACKAGE Exterior, for International Engines With Underhood Blanket and Foam Covered Splash Shields.
12WZD	EMISSION COMPLIANCE Engine Shutdown System Exempt Vehicles, Complies With California Clean Air Regulations
13AMG	TRANSMISSION, AUTOMATIC {Allison 2500_PTS} 4th Generation Controls; Wide Ratio, 5-Speed, With Overdrive; Less PTO Provision, Less Retarder, With 33,000-lb GVW & GCW Max. School Bus
	Includes : OIL FILTER, TRANSMISSION Mounted on Transmission : TRANSMISSION OIL PAN Magnet in Oil Pan
13WYL	SHIFT CONTROL PARAMETERS Allison Performance Programming in Primary and Allison Economy Programming in Secondary
14AGE	AXLE, REAR, SINGLE {Dana Spicer 17060S} Single Reduction, 17,500-lb Capacity, 190 Wheel Ends . Gear Ratio: 4.63
	Includes : REAR AXLE DRAIN PLUG (1) Magnetic, For Single Rear Axle
	Notes : The following features should be considered when calculating Rear GAWR: Rear Axles; Rear Suspension; Brake System; Brakes, Rear Air Cam; Brake Shoes, Rear; Special Rating, GAWR; Wheels; Tires. : When Specifying Axle Ratio, Check Performance Guidelines and TCAPE for Startability and Performance
14TBS	SUSPENSION, REAR, AIR, SINGLE {International} Ride Optimized Suspension (IROS); 21,000-lb Capacity, 9.25" Ride Height, With Shock Absorbers
	Notes : The following features should be considered when calculating Rear GAWR: Rear Axles; Rear Suspension; Brake System; Brakes, Rear Air Cam; Brake Shoes, Rear; Special Rating, GAWR; Wheels; Tires.
14WAW	FLAT FLOOR EFFECTS for Air Suspension; With Conventional Bus Models
15LKG	FUEL/WATER SEPARATOR With Thermostatic Fuel Temperature Controlled Electric Heater, and Filter Restriction/Change Indicator, Includes Standard Equipment Water-in-Fuel Sensor

EXHIBIT_____

Code	Description
15SAL	FUEL TANK Top Draw; Rectangular Steel, 65 U.S. Gal., 246 L With Protective Cage, Mounted Right Side Notes : Requires 193" WB Min.
16010	COWL Flat Back
16HBA	GAUGE CLUSTER English With English Electronic Speedometer Includes : GAUGE CLUSTER (5) Engine Oil Pressure (Electronic), Water Temperature (Electronic), Fuel (Electronic), Tachometer (Electronic), Voltmeter : ODOMETER DISPLAY, Miles, Trip Miles, Engine Hours, Trip Hours, Fault Code Readout : WARNING SYSTEM Low Fuel, Low Oil Pressure, High Engine Coolant Temp, and Low Battery Voltage (Visual and Audible)
16HGH	GAUGE, OIL TEMP, ALLISON TRAN
16HKT	IP CLUSTER DISPLAY On Board Diagnostics Display of Fault Codes in Gauge Cluster
26DRA	WHEEL, SPARE, DISC 22.5" Painted Steel, 10 Stud (285.75MM BC Hub Piloted) 8.25 DC Rim
27DMA	WHEELS, FRONT DISC; 22.5" Painted Steel, 2 Hand Hole, 10 Stud (285.75MM BC) Hub Piloted, Flanged Nut, Metric Mount, 8.25 DC Rims; With Steel Hubs Includes : PAINT IDENTITY, FRONT WHEELS Black : WHEEL SEALS, FRONT Grease Lubricated, Includes Wheel Bearings Notes : Compatible Tire Sizes: 11R22.5, 12R22.5, 255/70R22.5, 255/80R22.5, 265/75R22.5, 275/70R22.5, 275/80R22.5, 295/75R22.5, 295/80R22,5
28DMA	WHEELS, REAR DUAL DISC; 22.5" Painted Steel, 2 Hand Hole, 10-Stud (285.75MM BC) Hub Piloted, Flanged Nut, Metric Mount, 8.25 DC Rims; With Steel Hubs Includes : PAINT IDENTITY, REAR WHEELS Black : WHEEL SEALS, REAR Oil Lubricated, Includes Wheel Bearings Notes : Compatible Tire Sizes: 11R22.5, 12R22.5, 255/70R22.5, 255/80R22.5, 265/75R22.5, 275/70R22.5, 275/80R22.5, 295/75R22.5, 295/80R22,5
29580	WHEEL SEALS, FRONT {International} Oil-Lubricated Wheel Bearings
47AES	BODY, BUS Conventional; 78" Headroom, 25'11" Body Length, +9 Section Front, 53 Passenger, 217/218 WB
47AJA	BODY CERTIFICATION TAG Metal
47AJC	BODY TAG, METAL
47AKK	STEP, FRONT ENTRANCE DOOR 25 3/4" Depth; 14ga Steel Includes : STEP, FRONT ENTRANCE DOOR OPENING, 35 Inch Width; Continuous Bottom to Top
47AKZ	DECAL, HANDICAP (4) 6"x6", 1 Mounted on Electrical Access Door, 1 Mounted on Lift Door Below Window Line, 1 on Left Bumper, 1 on Rear Door Between Top and Bottom Glass
47AMA	FASTENERS, EXTERIOR MOUNTED Stainless Steel Screws; for Fender and Body Exterior Rear View Mirrors, Bumper Mounted Crossing Gate and Body Mounted Stop Arm
47APJ	BODY RATING TAG Metal; for State of Texas, Includes Design Capacity and Seat Capacity

EXHIBIT_____

Code	Description
47APR	HEADLINER, BODY Conventional; 25'11"-34'11" Body Length, Perforated Full Length With Sound Insulation Full Length
47APX	FASTENERS, HEADLINER Screws
47ARH	BOWS, ROOF 14 ga., One Piece Construction
	Includes : BOWS, ROOF Positioned Floor Line to Floor Line, Threaded Through Roof Strainers and Drip Rail
47ARP	LIGHT BARS Plastic
47ASG	SKIRT, BODY for Conventional, 14 1/2", 16ga
	Includes : SKIRT, BODY Extra Smooth Steel Supported by Floor Gussets
47AUR	TIE DOWNS, BODY Grade 8 Bolts, Every Body Section
	Includes : TIE DOWNS, BODY with Formed Tab that Fits into Floor Structure to Prevent Turning
47AXR	RUB RAILS, BODY (4) Conventional; Steel, 25'2", 25'11", 26'8", 27'5" Body Length, Includes Snow Rail
	Includes : RUB RAILS Full Length, Primer Coated (Both Sides), Attached to Body without Cuts or Splices
47AYB	BODY, REAR Includes Emergency Door
	Includes : DOOR, REAR EMERGENCY with Concealed Hinges
47AZC	SIDE SHEET, BODY, EXTERIOR Conventional, 16ga., Smooth, 25'2", 25'11", 26'8", 27'5", Body Length
47AZK	FLOOR, BODY Flat
47BAR	SUPPORTS, REAR BUMPER Bolted to Frame
47BAU	BUMPER, REAR Painted; 12" High, 3/16" Thick, With 7" Hole for Exhaust
47BAW	TOW HOOK, LEFT REAR (01)
47BAX	TOW HOOK, RIGHT REAR (01)
47BBH	LINING, SIDE INTERIOR, LOWER Embossed Steel, Clear Coated
47BBN	HANDLE, ASSIST, OVER WINDSHLD Body Color
47BCE	TIRE CARRIER Winch Type; Mounted Rear of Frame, Center
47BEX	SEALER Water-proof Sealer on all Floor Covering Seams
47DAJ	COVER, REAR DOOR INSIDE HANDLE Partial Coverage
47DAK	FASTENERS, REAR DOOR Bolts and Nutserts, Rear Door To Body
47DBP	DOOR, ENTRANCE, FRONT Air, Outward Opening, With Split Pane Glass
	Includes : DOOR, ENTRANCE, FRONT Aluminum Frame with Pin Style Hinges, Ball Bearing Assisted, Interchangeable Top and Bottom Glass
47DCW	HANDLE, EXTERIOR, LIFT DOOR Single Door, Yellow
47DDE	HANDLE, ASSIST, ENTRANCE DOOR Outside Entrance
47DDH	HOLD BACK, REAR DOOR Stationary, No Cables, With Plastic Cover

EXHIBIT_____

Code	Description
47DDR	LATCH, LIFT DOOR Single, Three Point Slide Bar
47DDV	LATCH, REAR DOOR Three Point Slide Bar, Cam Operated, With One Inch Stroke
47DEY	HANDLE, EXTERIOR, REAR Emergency Door; Yellow
47DNK	SWITCH, LOCATION Steering Wheel; Includes Master Flasher, Flasher ON/OFF, Red Override, and Door Control
	Includes : SWITCH, STEERING WHEEL, LIGHT Includes Illuminated Switches
47DWP	DOOR, LIFT Single, 43" x 69.79", Mounted Aft of Rear Wheel Pocket, With 78" Headroom
47EAA	COMPARTMENT, BATTERY Mounted Behind Left Front Wheel Pocket, 13" x 15" x 25.5"
	Includes : BATTERY TRAY 14-1/2" x 24-3/4" Slide Out Tray with Nylon Rollers and Stops : DOOR - COMPARTMENT with Pin Style Hinge
47EBM	HOLD DOWN, BATTERY For (2) Standard Size Batteries
47ECS	COMPARTMENT, TOOL, FWD LEFT Aft of Standard Battery Box, Key Lock, 13"x 15"x 25 1/2"
47EHA	CARTON, SHIPPING Carton for Spare Wheel Only, Inside Bus
47LAB	NOISE REDUCTION, DRIVER FLOOR Insulation Covering Complete Driver Floor Area
47LAR	NOISE REDUCTION, ROOF BOW Conventional; Insulation, 25'2", 25'11", 26'8", 27'5" Body Lengths
47LAU	INSULATION, ROOF AND SIDES 1.50", All Models
47MAH	MONITOR, POST TRIP INSPECTION {Leave No Student Behind} Accessory Controlled, With Alarm Disable at Rear of Bus; Prompts Driver to Walk to Back of Bus and Open Emergency Door to Deactivate System
47MAV	LETTERS, SCHOOL BUS SIDE Decal; "SCHOOL BUS"; in 8" Reflective Black Letters, Each Side
47MBA	UNDERCOAT, BODY Fire Resistant, Water Based, TT-C-730 Spec
	Includes : UNDERCOATING Performed Before and After Mounting on Chassis
47MJR	LETTERS, DOOR, REAR Decals; "EMERGENCY DOOR", 2" Black Letters Inside and Outside
47MNS	ARROW, RR DOOR, INSIDE Decal; Black, .75" Stroke, Indicating Handle Direction
47MPE	LETTERS, SCHOOL BUS FRONT/REAR Decal; "SCHOOL BUS", With 8" Black Reflective Letters, Diamond Grade, On Front and Rear Cap
47MRU	LETTERS, K/O WINDOW, LEFT (2) Decal Sets, "EMERGENCY EXIT", Black Inside and Outside
47MTY	WIRING DIAGRAM Schematic, Electrical
	Includes : ACCESS PANEL for Wiring Diagram Schematic Located on Body Exterior; Below Driver Window
47MVA	LETTERS, HEADER Decal; "WATCH YOUR STEP", 1" Black, Above Windshield
47MVC	LETTERS, STEPWELL Decal, "WATCH YOUR STEP", 2.5" Black, Behind Door on Step Riser
47NAB	PAINT RUB RAILS 0001 Canyon Black
47NGP	LETTERS, FUEL I.D. Paint; "DIESEL FUEL", 2" Black, Adjacent to Fuel Filler Door
47NGW	SEAL, RUB RAILS Top Edge, All Rails
47NHB	PLATE INSTR, LT. K/O WINDOW (2) Mounted Under Window

EXHIBIT_____

Vehicle Specifications
2011 INTEGRATED CE S BUS (PB105)

Code	Description
47NHL	LETTERS, K/O WINDOW, RIGHT (2) Decal Sets, "EMERGENCY EXIT", Black, Inside and Outside
47NHW	PLATE INSTR, RT. K/O WINDOW (2) Mounted Under Window
47NJA	PAINT COLOR, BODY EXTERIOR 4421 Yellow, SBNS
47NJM	PAINT FLASHER BACKGRD 0001 Canyon Black
47NJS	PAINT COLOR, BUMPER Rear; 0001 Canyon Black
47NKC	PAINT COLOR, ROOF 9219 Winter White
47NKL	PAINT, RUB RAIL Flange to Flange
47NKM	PAINT COLOR, BODY INTERIOR 9384 Spring White
47NMG	OPERATING INSTR, REAR Decal, Inside Rear Emergency Door
47NTE	LOGO, ROOF LINE Decal; Wing and Shield, First Body Section, Above Driver Window and Entrance Door Over Driver Window and Entrance Door
47NWH	STRIPING, ROOF HATCH, REAR Decal, Perimeter, 1", Yellow, 3M Fluorescent Diamond Grade
47NWJ	STRIPING, SEATLINE {3M} 2" Yellow, Fluorescent Diamond Grade
47NWR	STRIPING, REAR END {3M} 2" Yellow Fluorescent Diamond Grade
47NWT	STRIPING, ROOF HATCH, FRONT {3M} Decal, Perimeter, 1", Yellow Fluorescent Diamond Grade
47NWU	STRIPING, K/O WINDOW, RIGHT (2) Perimeter, 1" 3M Yellow Fluorescent Diamond Grade
47NXH	STRIPING, K/O WINDOW, LEFT (2) {3M} Perimeter, 1" Yellow Fluorescent Diamond Grade
47NXN	STRIPING, PERIMETER, REAR Emergency Door; 1" Wide, 3M Fluroescent Diamond Grade, Yellow
47SBP	SUB FLOOR, PLYWOOD Conventional; B-C Exterior Grade, Less Sealed Edges, 5/8", 5 Ply, for 25'2",25'11", 26'8" or 27'5" Body Lengths
47SPB	ALPHA/NUMERIC DECAL GUIDE Quantity 021-30
48ANE	WINDOW, ENTRANCE DOOR, TOP Laminated, Clear
48ANM	WINDOW, ENTRANCE DOOR, BOTTOM Laminated, Clear
48ANT	WINDOW, DRIVER Laminated, Clear
48APL	WINDOW, STOPS 12" Opening, Only With 78" Headroom
48ARE	WINDOW, SASH (10) 27" Sections, 9"x 23" Opening
48ASP	WINDOW, SASH +9 SECTIONS (2) 9" x 32 1/4" Opening
48AUL	WINDOW, PASSENGER, TINT Conventional; 28% Light, Laminated Glass, 78" Headroom, With 25'2", 25'11", 26'8", 27'5" Body Lengths
48BAB	WINDOW, K/O, LEFT (2) Horizontal Hinge
48BJA	COLOR, WINDOW FRAME, PASS Passenger Window, Natural Aluminum Finish
48BKB	WINDOW, K/O, RIGHT (2) Horizontal Hinge
48BXD	SEAT,UCRA,LT,39",2 LEG (02); With 2 UCRA Position per Seat
48BXV	SEAT,UCRA,RT,39",2 LEG (02); With 2 UCRA Position per Seat
48GHD	SEAT BELT, DRIVER, COLOR With Black Seat Belt Webbing
48NAT	FITTINGS, AIR SEAT for Driver Seat

EXHIBIT_____

Vehicle Specifications
2011 INTEGRATED CE S BUS (PB105)

Code	Description
48PAM	WINDSHIELD 3 Flat Pieces, 73% Light, With Band
48PAY	AISLE POSITION Center, for balanced seating
48PBB	FLOOR COVERING, COLOR Black
48PHE	UPHOLSTERY, PASS SEATS, TYPE Prevaill, 42 oz.; for (09-10) Seats
48PJR	FLOOR COVERING, TRIM Aluminum
48PJZ	FLOOR COVERING, TYPE {Koroseal} All Body Lengths
48PKC	CLAMPS, HEATER HOSE Constant Torque for Heater System
48PKS	FAN, DEFOG RIGHT CENTER 6.50" Diam., Mounted Over Windshield, 15" Right of Centerline, 2-Speed Switch in Panel
48PLA	FILTER, HEATER AIR, DRIVER Heater, Conventional
48PLW	HEATER, DRIVER 90,000 BTU, and Defroster Hot Water Type
	Includes : AIR FILTER : CLAMPS, HEATER HOSE Mubea Constant Tension Clamps : HEATER HOSES Premium
48PNW	HEATER, WATER PUMP {2MPU 12} Self Priming, With Plastic Housing
48PPM	HEATER CUT OFF, VALVE Ball, With Butterfly Handle
48PPP	HEATER CUT OFF, VALVE INSIDE Brass Ball, Inside Forward of Driver Heater
48PPS	ROOF VENT, FRONT Static
48PUT	NUTS, BELT MOUNTING Standard Nuts For Seat Belt Mounting
48PVA	UPHOLSTERY, DRIVER SEAT, STYLE Plain, With Cloth Insert
48PVN	UPHOLSTERY, DRIVER SEAT, COLOR Drivers Seat, Gray
48PWD	UPHOLSTERY, PASS SEATS, COLOR Gray, for Seats, Barriers and Head Bumpers
48PWR	UPHOLSTERY, DRIVER SEAT, TYPE Prevail, 42 oz.
48PXP	UPHOLSTERY, BARRIER, TYPE (1-2) Prevaill, 42 oz.
48RAE	BARRIER, CRASH, AFT ENTRY DOOR 39", 1 Leg
48RAL	BARRIER, CRASH, AFT DRIVER 39", 1 Leg
48RGE	HAND RAIL, ENTRANCE DOOR, FWD Stainless Steel; Curved
48RGR	HAND RAIL, ENTRANCE DOOR, AFT Stainless Steel, 4", Above Step
48RLX	CUSHION, SEAT 15" Depth
	Includes : WARRANTY Four Years
48RRA	UPHOLSTERY, SEAT, STITCHING Single
	Includes : WARRANTY Two Years
48RYW	SEAT, DRIVER {National 2000} Air Suspension, High Back With Integral Headrest, Cloth, Isolated, With 2 Position Front Cushion Adjustment, 6 to 17 Degree Seat Back Adjustment, Mechanical Lumbar Support, Includes Additional Back Padding For School Bus Use

EXHIBIT_____

Code	Description
48RZJ	STEP TREADS {Koroseal} Pebble Top With White Nosing, With Non-Metal Backing
48SDK	SEAT,PASS,LT,39",2 LEG (03)
48SKC	SEAT,PASS,RT,39",2 LEG (03)
48UCP	ROOF HATCH, FRONT {Transpec 1975-028-121-03} With Outside Release, With English Decals
48UCR	ROOF HATCH, REAR {Transpec 1975-028-121-03} With Outside Release, With English Decals
48USV	SEAT BACK, PASSENGER High Back
49005	BODY PLAN, APPROVED VARIATION Number 005
49AHP	LIGHT, STROBE, REAR Low Profile, Self-Contained, Double Flash 1st Section Above Rear Window
49AJH	CONNECTION, LIGHTS Cluster, Clearance and Side Marker To Tail Lights
49ALW	LIGHTS, ASIDE FRONT DOOR Exterior, 4" Lights Upper Portion Shield, Wired to Clearance Lights
49AMB	WIRE, FEED 4 Gauge, Chassis To Body
49AMD	SWITCH, DRIVER PANEL, TYPE Rocker
49AMJ	ALARM, BACKING {Ecco #575} 107 db
49AML	SWITCH, REAR DOOR BUZZER Rear Door With Knob, for State of Texas
49AMT	CIRCUIT, PROTECTION Breakers, Manual Reset in Lieu of Fuses
	Includes : ACCESS PANEL for Body and Chassis Fuses/Circuit Breakers Located on Body Exterior; Below Driver Window
49ANH	SWITCH, MAGNETIC, DISCONNECT Master, Ignition Operated, All Body Circuits
49APA	LIGHT, DRIVER, CEILING With Separate Switch, Mounted in Light Bar
49APV	LIGHT, LIFT DOOR, INTERIOR Above Lift Door, With Door Operated Switch
49APX	LIGHTS, DOME Conventional; Two Full Rows Rectangular Recessed Dome Lights, 25'2", 25'11", 26'8", 27' 5" Body Length
	Includes : WIRING HARNESS Main Body Wiring Harness Accessed by Removing Dome Light
49ARN	LIGHT, STEP Wired to Clearance Lights
49ATJ	LIGHT, INDIC, LIFT DOOR Amber; Flashing, Located in Driver Area
49BCN	FLASHER SYSTEM (8) Warning Lights, 8-Lamp System, Electronic Relay Flasher, Non-Sequential Operation, Red Lights Activate With Door Open
49BCR	LIGHT, EXTERIOR, CHECK Automatically Activates Lights for Pre Trip Inspection
49BEJ	RADIO, ENTERTAINMENT {Panasonic} AM/FM/CD Stereo, Includes Antenna and Cable, Four Speakers, With Public Adress System
49BGN	SWITCH, RED, OVERRIDE WARNING Wired Hot, With ESC
49BGW	MIRROR, CROSS VIEW, EXTERIOR {Mirror Lite Safety Cross New Busboy} for Left & Right Side; Black
49BJM	LIGHTS, DIRECTIONAL, SIDE {Sound Off} Armor Type, Amber, 1 Each Side, Second Bow Section Aft of Entrance Door Between 2nd & 3rd Rub Rail
49BKG	LIGHTS, STOP (2) {Sound Off ECV7561SST} and Tail; 7", LED, Red
49BKH	LIGHTS, DIRECTIONAL, REAR (2) {Sound Off ECV7561ITY} LED, 7" Amber

Vehicle Specifications
2011 INTEGRATED CE S BUS (PB105)

Code	Description
49BKJ	LIGHTS, MARKER, FRONT, REAR {Sound Off ECVML153Y&R} LED, Armored, (8) Four Amber Front and Four Red Rear
49BUS	WIRING, WARNING LIGHTS (8) for 7" Red Warning Lights, Alternately Flashing, 2 Front, 2 Rear, Red Warning Lights to Operate When Lift Door is Open and Master Flasher Switch is "ON"
49BWL	LIFT, WHEELCHAIR {Braun Model NL919FIB} Gen-2, Power Pack Mounted Forward of Lift, 800-lb Capacity
49DAG	LIGHT, INDIC, WARNING LIGHTS LED Type; Red and Amber
49DBR	HOOD, WARNING LAMP (4) Black, 8-Lamp System, One Hood Above Two Lights
49EAE	LIGHTS, MARKER, SIDE {Sound Off EVCML153Y} LED, Armored Type, Intermediate, Centered; Required for Units 30 Foot or Longer
49EBA	KIT, FIRST AID Plastic; 24 Unit, Spec State
49EEW	STOP ARM, LEFT REAR {Specialty} Electric, 18" Octagon, Single Sided, 1/2" White Border, Hi Intensity Grade, Flashing RED Incandescent Lights
49EEX	STOP ARM, FRONT {Specialty} Electric, 18" Octagon, Double Sided, 1/2" White Border, Hi Intensity, Flashing RED Incandescent Lights
49EGB	MIRROR, INSIDE 10" x 30", Clear
49ENK	VISOR, INTERIOR, LEFT FRONT 6" x 30", Transparent, For Left Windshield
49EVL	SWITCH, NOISE SUPPRESSION Actuator Legend States, "NOISE SUPP ", for Separate Solenoid, With Red Switch in Panel
49EYB	MIRROR, REAR VIEW, EXTERIOR {Rosco 717} Single Arm Breakaway Bracket, Motorized Head, Stainless Steel, Overhang Type
49GAY	KIT, BODY FLUID Texas
49GBV	WINDSHIELD WIPERS (2) Cowl Mounted
	Includes : WINDSHIELD WIPERS CONTROL Single Motor, Overlapping Wipe Pattern
49GEH	SAFETY TRIANGLES Warning Reflectors, Mounted on Drivers Barrier Level With Top of a Modesty Shield
49GGE	FIRE EXTINGUISHER, DRIVER AREA 5 lb 2A-40BC Minimum With Flexible Hose and Metal Nozzle
49GGU	FIRE BLANKET 36 Sq. Ft.
49GKZ	FUEL FILLER DOOR With Non-Locking Latch
49GLA	REFLECTORS, SIDE, INTERMEDIATE (2) 3" Amber, 1 Each Side, Mounted With Screws, Below The Third Rub Rail From the Top
49GLG	REFLECTORS, SIDE, REAR (2) 3", Red, Mounted With Screws
49GLM	REFLECTORS, SIDE, FRONT (2) 3", Amber; 1 Aft Drivers Window Left, 1 Aft Entrance Door Right, Mounted With Screws
49GLP	REFLECTORS, REAR (2) 3", Red, Mounted With Screws
49GMM	INTERLOCK, LIFT for FMVSS Wheel Chair Interlock Requirements; Key Off, Lift Door Must be Open before Lift can be Activated, With Key in "On or Accessory" Position, Park Brake Must be Applied, Transmission in Neutral, Lift Door Must be Open Before Lift Can be Activated, With Automatic Transmission Only
49GRG	LIGHT, LICENSE PLATE {Sound Off ECVLPBLED} LED, With Mounting Gasket
49GRS	LIGHTS, CLUSTER {Sound Off ATCVMLDP1R & ATCVMLDP1Y} LED; Amber Front and Red Rear
49GUB	CUTTER, SEAT BELT {Safecut} for Cutting Seat Belts

EXHIBIT_____

Vehicle Specifications
2011 INTEGRATED CE S BUS (PB105)

Code	Description
49GUM	INSPECTION PLATE 5" Dia. Steel
49GUX	MUD FLAPS, FRONT WHEELS (2) Rubber
49GUY	MUD FLAPS, REAR WHEELS (2) Anti-Spray and Anti-Sail; Behind Rear Wheels
49GWW	WINDSHIELD WASHER Kit; 6 Quart Capacity, Bottle
	Includes : WINDSHIELD WASHER ELECTRICAL CONNECTIONS Sealed and Locking Type
49HAJ	STORAGE COMPARTMENT, BELTS (3) for Q-Straint Wheelchair Belts, Mounted to Wall
49HES	MIRROR, BRACE, EXTERIOR Telescoping for Breakaway Bracket
49HEW	TRACK, TYPE (BRAND) {Q'Straint L Track}
49HEZ	TRACK, FLOOR LENGTHS 101"-150", With Full Shoulder Track
49HHB	TIE DOWN, TRACK (03) Retractable
49MJX	TIE DOWN, TRACK TYPE {QRT Q-8107-A1-L2} Retractable, With Track Fittings on Shoulder Belt
49MYH	LIGHTS, WARNING (8) {Sound Off} (4) 7" Red Flashing LED and (4) 7" Amber Flashing LED, 2 Front, 2 Rear Each Color
49UBZ	STATE OF OPERATION Texas
49XHP	LIGHTS, STOP & TAIL ADDITIONAL (2) {Sound Off} Red, LED, 4" Diameter, With Flange
49XJJ	LIGHTS, BACK UP (2) {Sound Off} White, LED, 4" Diameter, With Flange
7752520120	(2) TIRE, FRONT 255/70R22.5 G169 RSA (GOODYEAR) 566 rev/mile, load range H, 16 ply
7752520120	(4) TIRE, REAR 255/70R22.5 G169 RSA (GOODYEAR) 566 rev/mile, load range H, 16 ply
OBD001	BODY PLAN, SPECIAL NEEDS PB10500 25FT 11 IN PLUS 9 FRT CAP 33 LIFT REAR 3 WC LHORN 717
	Services Section:
40BVM	SRV CONTRACT, EXT VEH COVERAGE 24 Month/Unlimited Miles ; With 90-Day Towing; Covers 100% Parts and Labor; Includes Body; Excludes Extending Warranty for Engine, Transmission, Frame Side Rails, Perforation or Corrosion of Cab/Cowl Structure and Paint
40CGJ	SERVICES, TOWING To 36-Month/150,000 Miles (240,000 km), Service Call to the Vehicle or Towing to the Nearest International Dealership for a Non-Drivable Unit in Conjunction with an International Warrantable Failure; $500 (USA) Maximum Benefit per Incident
49GVN	WARRANTY 5-Year, Limited
	ECHO FUEL ENHANCEMENT
	A/C SYSTEM CARRIER 126,000 BTU
	CAMERA SYSTEM
	2-WAY RADIO

EXHIBIT_____

Financial Summary
2011 INTEGRATED CE S BUS (PB105)

August 26, 2010

(USA DOLLAR)

Description	Price
Net Sales Price:	$188,318.00

Please feel free to contact me regarding these specifications should your interests or needs change. I am confident you will be pleased with the quality and service of an IC Corporation vehicle.

Approved by Seller:

Sales Manager 8-26-2010
Official Title and Date

Authorized Signature

Accepted by Purchaser:

Firm or Business Name

Authorized Signature and Date

This proposal is not binding upon the seller without Seller's Authorized Signature

Official Title and Date

EXHIBIT_____

APPROVAL OF BUYBOARD 11-12, BAND UNIFORMS & FORMAL WEAR FOR ECONOMEDES HIGH SCHOOL

Superintendent's Recommendation

That the Board of Trustees approve the recommendation to accept the BuyBoard quote for Band Uniforms & Formal Wear for JEHS which is indicated in the attached quote as being the most favorable and advantageous to the District.

Rationale

Band uniforms and formal wear purchased through the BuyBoard meet all purchasing requirements. The BuyBoard has awarded Demoulin Bros & Co. a contract which is available to the District.

The JEHS Band is requesting this purchase to replace and update the current uniform. The current uniform has been in use for the past 9 years. The lifespan from the uniforms was 5-8 years. The new uniform is to promote school and community pride while presenting band with a simple, yet elegant, professional and contemporary uniform design. The uniform should last for 8-10 years. All components of the uniforms are included from the selected vendor – trousers, jacket, shako (hat), plume (feathers), shako box, gauntlets, plume case, garment bag, hanger, and a uniform management system. To include all students, drum major uniforms and color guard uniforms have been included in the request. It is important that we go with all items on this bid from one vendor so that the colors match from piece to piece.

User Department

This item was requested by Nelinda Villarreal, Director of Fine Arts.

Budgetary Information

Total Purchase Amount: $84,986.75

Account	Description	Appropriations	Encumbrance	Expenditure	Balance
166-36-6395-06-002-199-000	Clothing for Students	85,000.00	0.00	0.00	85,000.00
	TOTALS	**85,000.00**	**0.00**	**0.00**	**85,000.00**

Resource Personnel

Dr. René Gutiérrez
Rigoberto V. Abrego
Sylvia D. Garcia
Maria Luisa Guerra
Nelinda Villarreal
Chad Dempsey
Amaro Tijerina
Claudina E. Longoria

Board Policy Reference

This is in accordance with the Board Policy CH Purchasing Bidding Requirements.

Requested by: Nelinda Villarreal
Nelinda Villarreal, Director of Fine Arts

Approved by: Maria Luisa Guerra
Maria Luisa Guerra, Asst. Supt. for Instruction/Support

Within Budgetary Allocations : Sylvia D. Garcia
Sylvia D. Garcia, Director of Finance

Approved by:
Rigoberto V. Abrego, Asst. Supt. for Finance/Operations

Recommended by: René Gutiérrez
Dr. René Gutiérrez, Superintendent of Schools

EXHIBIT _____PAGE(S)_____

Notes for Bid Tabulation
BUYBOARD 11-12, BAND UNIFORMS & FORMAL WEAR FOR ECONOMEDES
July 27, 2010

1. **USER DEPARTMENT**: This quote was requested by the Fine Arts Department. Nelinda Villarreal, Director of Fine Arts will be present to answer any detailed questions regarding this bid.

2. **TYPE OF QUOTE**: This is a single time purchase.

3. **QUOTE EVALUATION**: This quote was evaluated by Thomas Pena and Nelinda Villarreal. Final recommendations to the board are done by the Superintendent of Schools.

4. **ORDERING INFORMATION**: The Fine Arts Department will prepare purchase orders following Board of Trustee bid approval on an as needed basis.

5. **APROXIMATE AMOUNT SPENT LAST YEAR:** None purchased last year.

6. **TOTAL AWARD RECOMMENDATION**:

VENDOR	AWARD RECOMMENDATION
Demoulin Brothers & Co.	$84,986.75
TOTAL ESTIMATED AWARD	**$84,986.75**

7. **BID EVALUATION NOTES**:

   A - Award recommendation to lowest overall and most advantageous bidder.

EXHIBIT _____

DeMOULIN
BROS. & CO. • 1025 SO. FOURTH ST
GREENVILLE, ILLINOIS 62246
Tel 800 228-8134 • Fax 618 664-1712

Sales Agreement

Your Area Representative:
Mimi Kallin, Sales Representative
4252 River Ranch Circle
Robstown,Texas 78380
800/242-9615 361/387-4125

Bill To: **Economedes HS Band**
Attn: **Tomas Pena**
Address:
City, St, Zip **Edinburg, TX 78539**
Telephone:

Ship To: **Economedes HS Band**
Attn: **Tomas Pena**
Address:
City, St, Zip: **Edinburg, TX 78539**
Fax:

This order is made in good faith with the understanding that it will become a contract for the sale of goods described at the prices and terms shown, upon acceptance and acknowledgment by the Seller at Seller's office in Greenville, Illinois. This transaction shall be governed solely and exclusively by the terms and conditions set forth in this contract.

Payment Terms: **Net 30 Days with School Purchase Order**

* The Cash Discount Option, available for full prepayment at the time the order is placed, has been explained to me. This discount is not available for credit card payments. I **DECLINE** this option. Buyer's Signature: _____ Date: ~~August 30, 2010~~

Delivery Schedule: **SHIPMENT: 90-120DAYS AFTER RECEIPT AT GREENVILLE, ILLINOIS OF:**
1. This signed Agreement with down payment.
2. Sample Uniform to be duplicated.
3. Written approval of any changes from the sample uniform
4. Sizes - to include student measurements and/or approval of stock sizes.

QUANTITY	STYLE	ITEM DESCRIPTION	UNIT PRICE	EXTENSION
220	B484	coat, machine wash, back zip 14 oz. poly	$127.13	$27,968.60
220	B569	Bibbers, 14 oz. ply	$69.85	$15,367.00
220	30-1	flat top shako w/ plastic carton	$46.22	$10,168.40
230	plume	14" fr. upright w/ flecks	$17.96	$4,130.80
220	B538-A	gauntlets to match	$32.20	$7,084.00
275	Vivace	garment bags	$8.25	$2,268.75
6	dmaj.	drum major uniform/compete	$362.25	$2,173.50
275	hangers	deluxe hanger w/ locking pant bar	$0.86	$236.50
4	plume case	plumes cases	$88.00	$352.00
30	guard	custom guard top/pants Algy Ray top/pants	$139.84	$4,195.20
65	formal	men's formalwear set	$103.00	$6,695.00
69	formal	ladies' AD-01 gown all sizes	$63.00	$4,347.00

F.O.B. SCHOOL

Bid pricing on all items except coat (significant change to sleeve design; color change did not add cost)

Guard change to reflect new design; includes 26 missy, 4 plus. Freight and price per manufacturer.

DeMoulin is a Buyboard Vendor.

Subtotal	$84,986.75
Less Cash Discount	$0.00
Subtotal	$84,986.75
Sales Tax	
Shipping & Handling	$0.00
Contract Total	**$84,986.75**
Down Payment	
Balance Due	**$84,986.75**

I declare myself duly authorized to commit my organization to this purchase and that monies for payment of same have been authorized, and are now, or will be, available for full payment of order as per terms stated above. This agreement may be modified or rescinded only by a writing signed by both of the parties or their duly authorized agents and accepted by the seller at the seller's home office in Greenville, Illinois. I HAVE READ THE CONDITIONS OF SALE ON THE BACK, INCLUDING THOSE LIMITING WARRANTIES, AND I AGREE TO ALL THE PROVISIONS THEREIN.

Buyer's Signature: _____ Date August 30, 2010
Position: _____ Organization: **Economedes HS Band**

This Agreement shall not bind DeMoulin Brothers & Company until accepted and countersigned below by a representative of the DeMoulin Brothers & Company home office in Greenville, Illinois.

Accepted by: _____ Date _____

EXHIBIT_____

DeMOULIN
BROS. & CO. • 1025 SO. FOURTH ST
GREENVILLE, ILLINOIS 62246
Tel 800 228-8134 • Fax 618 664-1712

Sales Agreement

Your Area Representative:
Mimi Kallin, Sales Representative
4252 River Ranch Circle
Robstown,Texas 78380
800/242-9615 361/387-4125

CONDITIONS OF CONTRACT

1. LIMITED WARRANTY AND DISCLAIMER, SOLE REMEDY - The seller warrants that the goods to be delivered are substantially identical with the sample inspected and that they will conform to the specifications described under this agreement. Merchandise not meeting specification will promptly be corrected. DeMoulin Brothers & Company shall repair, or, at its discretion, replace any defective uniform part. The LIFETIME LIMITED WARRANTY delivered to the buyer with the goods shall apply and the same is hereby made a part hereof as though fully set forth herein. THERE ARE NO OTHER WARRANTIES EXPRESS OR IMPLIED, INCLUDING ANY IMPLIED WARRANTY OF MERCHANTABILITY OR FITNESS. The remedy hereby provided shall be the exclusive and sole remedy of the buyer. The buyer shall not be entitled to claim any consequential damages (including lost profits) for nonconforming or defective goods or for late delivery or nondelivery. Sellers' warranty made in connection with the sale shall not be effective if Seller has determined, in its sole discretion, that Buyer has misused the products in any manner or has failed to care for the products in accordance with instructions furnished by Seller.

2. NOTICE OF CLAIMS - Notice of claims arising from this Limited Warranty must be submitted in writing to DeMoulin Brothers & Company, at Greenville, Illinois 62246. Within 20 days of notifying the seller of any such claim, the buyer must make available for inspection by DeMoulin Brothers & Company at a location and time reasonably convenient to both parties all goods for which claim is being made.

3. CANCELLATIONS - No part of this Agreement can be canceled or altered after the merchandise has been cut.

4. DELIVERIES - This Agreement is a shipment contract. The goods sold F.O.B. or C.I.F., as stated on shipping instructions on the face of this Agreement, seller's factory, Greenville, Illinois. The acceptance of the merchandise by any common carrier shall constitute delivery. Merchandise will be shipped subject to actual valuation and title of goods and risk of loss shall pass to the buyer upon delivery to common carrier and invoicing thereof to the buyer. It is the buyer's responsibility to check condition of shipment before signing unconditional delivery slip of carrier. All claims against the carrier must be filed by buyer with delivering carrier.

5. LIMITATION ON RETURNING MERCHANDISE - No merchandise shall be returned by the buyer unless such return is authorized by the seller. Retention of goods without written claim or objection for more than 15 days, (or the use of goods in any manner), shall constitute an unconditional acceptance of the same by the buyer, unless otherwise agreed in writing.

6. PAYMENT - Payment shall be in the manner set forth on the face of this Agreement.

7. INTERPRETATION OF CONTRACT - This writing is intended by the parties as the final expression of their agreement and is intended as a complete and exclusive statement of the terms of their agreement. This agreement supersedes the buyer's order solicited by the salesperson. There are no oral understandings, representation or agreements relating to this Agreement not fully expressed herein.

8. APPLICABLE LAW - This Agreement shall be governed by the Uniform Commercial Code as adopted by the State of Illinois, as effective and in force on the date of this Agreement.

9. DELAYS BEYOND SELLER'S CONTROL - In the event that delivery under this Agreement is prevented or delayed by strikes, lockouts, embargoes, lack of shipping facilities, lack of or inability to obtain raw materials labor or fuel, or any cause or circumstance not limited to the above, beyond the seller's control, seller shall not be liable for such delay and the seller's time for performance shall be extended by the period of said delay.

10. SHIPMENT AND TERMS - The seller may make partial or complete shipment prior to shipping date indicated with the understanding payment will not be due until the date shown on the face of this Agreement.

EXHIBIT_____

APPROVAL OF RFP 09-136, WEB-BASED INSTRUCTION PROGRAM FOR TEKS – FIRST AND FINAL CONTRACT RENEWAL

Superintendent's Recommendation

That the Board of Trustees approve the recommendation to renew the RFP for web-based Instruction Program for TEKS as requested by the Assistant Superintendent for Instruction and Support Services.

Rationale

This bid has a one (1) year renewal option. Mrs. Maria Luisa Guerra, Assistant Superintendent for Instruction and Support Services and the awarded vendor have agreed in writing to continue this bid for an additional term contract at no increase in cost.

The administration sought Request for Proposals for Web-Based Instruction Program for TEKS. RFP'S opening was held at the Business Office Building on May 21, 2009 at 3:00 P.M. where five (5) proposals were opened and read aloud. Study Island is a supplemental program that allows children to work independently on targeted skills for academic achievement. It also, provides additional tests that a campus can utilize for benchmarking students for diagnosing areas of weakness so that teachers can utilize this information to customize for their tutorial lessons. This math, science, history, and reading software program is used by all campuses and all grade levels.

User Department

This item was requested by Mrs. Maria Luisa Guerra, Assistant Superintendent of Instruction and Support Services.

Budgetary Information

Total Award Recommendation **$70,000.00**

Account	Description	Appropriations	Encumbrance	Expenditure	Balance
XXX-XX-6399-XX-XXX-1XXXXX	Consultant Services	7,400,876.00	0.00	0.00	7,400,876.00
	TOTAL	7,400,876.00	0.00	0.00	7,400,876.00

Resource Personnel

Dr. René Gutiérrez
Maria Luisa Guerra
Rigoberto V. Abrego
Amaro Tijerina
Sylvia D. Garcia
Jacqueline Kingan

Board Policy Reference

This is in accordance with Board Policy CH, Purchasing Law Bidding Requirements.

Approved by: _____
Maria Luisa Guerra, Asst. Supt. for Instruction/Support

Within Budgetary Allocations: _____
Sylvia D. Garcia, Director for Finance

Approved by: _____
Rigoberto V. Abrego, Asst. Supt. For Finance/Operations

Recommended by: _____
Dr. René Gutiérrez, Superintendent of Schools

EXHIBIT_____PAGE(S)_____

Notes for Bid Renewal
RFP 09-136, Web-Based Instruction Program for TEKS
September 14, 2010

1. **USER DEPARTMENT**: This renewal was requested by the Assistant Superintendent for Instruction and Support Services. Mrs. Maria Luisa Guerra will be present to answer any detailed questions regarding this bid.

2. **TYPE OF RFP**: This is a term contract beginning September 15, 2010 or soon thereafter and ending August 31, 2011. This is the first and final renewal option for this CONTRACT PERIOD.

3. **RFP EVALUATION**: This RFP was evaluated by a committee of the following Principals and Directors.

   Ronald Cavazos, Director of Federal Programs
   Eva Torres, Principal Barrientes Middle School
   Carlos Guzman, Principal Memorial Middle School
   Diane Willis, Principal Hargill Elementary
   Eva Sandoval, Principal Lincoln Elementary

4. **ORDERING INFORMATION**: Purchase orders will be prepared on an "as needed" basis by Campuses following Board of Trustees approval.

5. **APPROXIMATE AMOUNT SPENT LAST YEAR**: $70,000.00

6. **Total Award Recommendation** **$70,000.00**

7. **AWARDED VENDOR**

VENDOR
Study Island 3400 Carlisle Street #345 Dallas, TX 75204 Contact: Schanen Mickoles PH: 800-419-3191 Ext 7432 FAX: 877-582-1357

EXHIBIT_____

EDINBURG CONSOLIDATED INDEPENDENT SCHOOL DISTRICT
PURCHASING DEPARTMENT
DRAWER 990
EDINBURG, TEXAS 78540
PHONE: (956) 289-2311
FAX (956) 383-7687

MEMORANDUM

Date: June 24, 2010

TO: Maria Luisa Guerra. Assistant Superintendent for Instruction and Support Services

FROM: Jacqueline Kingan, Senior Buyer

SUBJECT: **RENEWAL OF BID 09-136, WEB-BASED INSTRUCTION PROGRAM FOR TEKS**

There is an option to renew the above mentioned bid. Attached is the detailed information on the state contract. I have attached the new contract for your review.

Please sign and return back to me for processing. Let me know as soon as possible, if you have any questions, give me a call at 956-289-2311 Ext. 2137.

THANK YOU!

Yes, I want to renew: _____ 8/3/10

No, I don't want to renew: _____

Reason why you don't want to renew:

_____

_____

_____

_____

_____

_____

Thank you.

Nondiscrimination Statement

It is the policy of Edinburg CISD not to discriminate on the basis of sex, age, handicap, religion, race, color, or national origin in its' educational programs.

EXHIBIT_____

EDINBURG CONSOLIDATED INDEPENDENT SCHOOL DISTRICT
PURCHASING DEPARTMENT
411 North 8th/DRAWER 990
EDINBURG, TEXAS 78541
PHONE: (956) 289-2311
FAX (956) 383-7687

May 5, 2010

FAX: 877-592-1357

Dear Study Island;

REF: REQUEST FOR INFORMATION - FOR CONTRACT RENEWAL
RFP 09-136, WEB-BASED INSTRUCTION PROGRAM FOR TEKS

Our original bid specifications provided for an extension of the awarded contract if both parties agreed in writing on the extension and if the unit prices, discounts, terms and conditions remained the same as the cost for contract renewal. If accepted by the Edinburg CISD, the renewal contract will start September 1, 2010 or soon thereafter and end August 31, 2011.

We are interested in knowing whether your company will extend this contract for an additional year. ***If your renewal extension is accepted by the Edinburg CISD, this form will be signed and faxed back to your company to notify you of the renewed contract. The Edinburg CISD reserves the right to accept or reject the renewal of this contract and to bid out a new contract.***

Please call Jacqueline Kingan, Senior Buyer at 956-289-2311, Ext. 2137 or e-mail at j.kingan@ecisd.us if you have any questions regarding this contract.

YES: Shana Dwick, per original discounts, terms, and conditions.
Vendor Signature

NO: _____, I am not interested in extending my awarded contract.
Vendor Signature

Archipelago Learning - Study Island
Company Name

Approved for Renewal:

_____ _____
Edinburg CISD Date

EXHIBIT_____

APPROVAL OF RFP 10-196, DISTRICT WIDE CONSULTANT STRATEGIST FOR FEDERAL PROGRAMS

Superintendent's Recommendation

That the Board of Trustees approve the recommendation to accept the RFP for District Wide Consultant Strategist for Federal Programs, which is indicated in the attached bid tabulation as being the most favorable and advantageous to the Edinburg CISD.

Rationale

The administration sought competitive sealed bids for District Wide Consultant Strategist for Federal Programs. Bid opening was held at the Business Office Building on July 23, 2010, at 4:00 P.M. nine (9) proposals were opened. Consultants are used by some campuses to support the instructional program. These consultants work with the principals and teachers to develop lesson plans, assessments, and strategies that address the needs of the students on their campus.

Budgetary Information

Total Award Recommendation **$163,250.00**

Account	Description	Appropriations	Encumbrance	Expenditure	Balance
161-13-6291-00-XXX-130000	Consultant Services	71,050.00	0.00	0.00	71,050.00
211-13-6291-00-XXX-130000	Consultant Services	476,250.00	0.00	0.00	476,250.00
285-13-6291-00-XXX-130100	Consultant Services	10,000.00	0.00	0.00	10,000.00
	TOTAL	**557,300.00**	**0.00**	**0.00**	**557,300.00**

Resource Personnel

Dr. René Gutiérrez
Maria Luisa Guerra
Jacqueline Kingan
Rigoberto V. Abrego
Ronaldo Cavazos
Sylvia D. Garcia
Amaro Tijerina

Board Policy Reference

This is in accordance with Board Policy CH, Purchasing Law Bidding Requirements.

Prepared by: _____
Ronaldo Cavazos, Director of Federal Programs

Approved by: _____
Maria Luisa Guerra, Asst. Supt. for Instruction/Support

Within Budgetary Allocations: _____
Sylvia D. Garcia, Director for Finance

Approved by: _____
Rigoberto V. Abrego, Asst. Supt. For Finance/Operations

Recommended by: _____
Dr. René Gutiérrez, Superintendent of Schools

EXHIBIT_____PAGE(S)_____

08-30-10 A06:57 RCVD

Notes for Bid Tabulation
RFP 10-196, District Wide Consultant Strategist for Federal Programs
September 14, 2010

1. **USER DEPARTMENT**: This RFP was requested by the Federal Programs Department. Mr. Ronaldo Cavazos will be present to answer any detailed questions regarding this bid.

2. **TYPE OF RFP**: This is a term contract beginning September 15, 2010 or soon thereafter and ending August 31, 2011 with an option to renew for an additional two (2) year contract period.

3. **RFP EVALUATION**: This RFP was evaluated by the following Principals: Daniel Roma, Edinburg High School; Nelda Gayton, Lee Elementary; Edna L. Olivarez, Travis Elementary; Jesus M. Cantu, Betts Elementary; Thelma R. Rodriguez, Cano-Gonzalez Elementary; Sandra M. Avila, Guerra Elementary; Gilda G. Sanchez, Harwell Middle School; Eva Sandoval, Lincoln Elementary; Eliana Flores, Eisenhower Elementary; Arnoldo F. Benavidez, Freddy Gonzalez Elementary, and Ronaldo Cavazos, Director of Federal Programs.

4. **ORDERING INFORMATION**: Purchase orders will be prepared on an "as needed" basis by Federal Programs following Board of Trustees approval.

5. **APPROXIMATE AMOUNT SPENT LAST YEAR**: $167,750.00

6. **AWARD RECOMMENDATION BY CONSULTANT:**

CONSULTANT	TOTAL ESTIMATED AWARDS
Hilda Escobar	$42,750.00
Eddie Rodriguez	$32,500.00
Herminia Martinez	$22,500.00
Palm Ira Educational Consultant	$18,000.00
Luis Ramos	$15,000.00
Maggie Palacios	$13,500.00
Exemplary Curriculum Solutions	$10,000.00
Luule Moreno	$9,000.00
TOTAL	**$163,250.00**

EXHIBIT_____

1. **CAMPUSES USING CONSULTANTS:**

CAMPUS	CONSULTANT USED	NUMBER OF DAYS	NEGOTIATED PRICE PER DAY	TOTAL PRICE
Cano-Gonzalez Elementary	Luis Ramos	15	$500.00	$7,500.00
Lincoln Elementary	Hilda Escobar	20	$450.00	$9,000.00
Guerra Elementary	Hilda Escobar	20	$450.00	$9,000.00
Lee Elementary	Hilda Escobar	20	$450.00	$9,000.00
Betts Elementary	Palm-Ira Educational	10	$600.00	$6,000.00
Eisenhower Elementary	Hilda Escobar	20	$450.00	$9,000.00
Travis Elementary	Maggie Palacios	15	$450.00	$6,750.00
Freddy Gonzalez Elementary	Palm-Ira Educational	10	$600.00	$6,000.00
Harwell Middle School	Herminia Martinez	15	$500.00	$7,500.00
Economedes High School	Herminia Martinez	15	$500.00	$7,500.00
	Eddie Rodriguez	15	$1,300.00	$19,500.00
Edinburg High School	Luule Moreno	15	$600.00	$9,000.00
	Herminia Martinez	5	$500.00	$2,500.00
	Luis Ramos	15	$500.00	$7,500.00
Distrct Wide as Needed	Eddie Rodriguez	10	$1,300.00	$13,000.00
	Herminia Martinez	10	$500.00	$5,000.00
	Hilda Escobar	15	$450.00	$6,750.00
	Palm-Ira Educational	10	$600.00	$6,000.00
	Exemplary Curriculum Solutions	10	$1,000.00	$10,000.00
	Maggie Palacios	15	$450.00	$6,750.00
TOTAL AWARD RECOMMENDATION				**$163,250.00**

EXHIBIT_____

10-196, DISTRICT WIDE CONSULTANT STRATEG

8852
CAMILO MARTINEZ
217 E YARROW AVE
MCALLEN, TX 78504

8810
EDDIE RODRIGUEZ
450 N. SAN GABRIEL AVENUE
SAN ANTONIO, TX 78228-6116

7955
ELLEN GONZALEZ
713 SABAL AVENUE
EDINBURG, TX 78539

9446
ELVIA GARCIA
1907 NORMA LANE
EDINBURG, TX 78539

9193
EXEMPLARY CURRICULUM SOLUTIONS
814 COUNTY ROAD 402
FALFURRIAS, TX 78355

8811
HERMINIA MARTINEZ
1701 SMITH
EDINBURG, TX 78541

2392 86-0187455
HERZOG RESEARCH
1433 EAST BROADWAY
TUCSON, AZ 85719

6238 74-24792172
HILDA C. ESCOBAR CONSULTANTS
310 ROSE MARIE
MISSION, TX 78572

9354
IRMA D. DURAN
2313 NORTH J
McALLEN, TX 78501

8117
JOSE LUIS SANTILLAN
1210 COIL DRIVE
SAN JUAN, TX 78589

6758
JUSTICE RESEARCH & ADVOCACY IN
849 CLEVELAND AVENUE
AMHERST, OH 44001

7956
LUIS RAMOS
1508 SHORT ROAD
SAN JUAN, TX 78589

9448
LUULE MORENO
416 WEST YUCCA
McALLEN, TX 78504

8133
MAGGIE PALACIOS
100 WEST MOORE ROAD, LOT 8
PHARR, TX 78577

9621
MARTA CANTU SALAZAR
814 COUNTY ROAD 402
FALFURRIAS, TX 78355

5532
PALMIRA LOZANO
P.O. BOX 1482
ELSA, TX 78543

8153
PATRICIA FOGARTY
P.O. BOX 2793
McALLEN, TX 78502-2793

8571
ROEL PENA
2310 NORTH McCOLL ROAD
EDINBURG, TX 78541

7957
ROLANDO PENA
3206 NORTH SHARY ROAD
MISSION, TX 78574

7511 459-43-4082
SOFIA A. VALDEZ
1210 S. DANNER
PHARR, TX 78577

7986 203063005
SPRINGBOARDS TO EDUCATION
3802 S. HWY. 281
EDINBURG, TX 78539

9075
STEVE SANCHEZ
411 BAILEY AVE
SAN ANTONIO, TX 78210

EXHIBIT_____

10-196, DISTRICT WIDE CONSULTANT STRATEG

7085 74-2808435
SURE SCORE, INC.
3019 ALVIN DEVANE BLVD.
AUSTIN, TX 78741

703 33-0883062
TEXAS COURSEWARE INC
P.O. BOX 9646
*****OUT OF BUSINESS*****
SPRING, TX 77386-6646

4991 13-4125483
WIRELESS GENERATION INC.
55 WASHINGTON STREET
SUITE #900
BROOKLYN, NY 11201-1071

9592
TEACHING STRATEGIES INC. DBA;
SAFE & CIVIL SCHOOLS
P.O. BOX 50550
EUGENE, OR 97405

9493
THE COLUMBUS ORGANIZATION
1012 WEST 9TH AVE
SUITE #100
KING OF PRUSSIA, PA 19406

****

Vendors Printed: 27

****

EXHIBIT_____

APPROVAL OF RFP 10-198, FINE ARTS – BAND CONSULTANTS

Superintendent's Recommendation

That the Board of Trustees approve the recommendation to accept the proposal for Band Consultants as requested by the Fine Arts Department which is indicated in the attached proposal tabulation as being the most favorable and advantageous to the Edinburg CISD.

Rationale

Administration sought competitive sealed proposals for Band Consultants. Proposal opening was held at the Business Office Building on August 23, 2010, at 2:30 P.M. where fifty-six (56) proposals were received, opened, and read aloud.

User Department

This item was requested by Nelinda Villarreal, Director for Fine Arts.

Budgetary Information

Estimated Award Recommendation: $42,000.00

Account	Description	Appropriation	Encumbrance	Expenditure	Balance
166-11-6219-xx-xxx-111-000	Other Professional Services	50,050.00	955.00	0.00	49,095.00
	TOTAL	**50,050.00**	**955.00**	**0.00**	**49,095.00**

Resource Personnel

Dr. Rene Gutierrez
Rigoberto V. Abrego
Sylvia D. Garcia
Maria Luisa Guerra
Nelinda Villarreal
Amaro Tijerina
Claudina E. Longoria

Board Policy Reference

This is in accordance with the Board Policy CH, Purchasing Law Bidding Requirements.

Prepared by: Nelinda Villarreal
Nelinda Villarreal, Director of Fine Arts

Approved by: Maria Luisa Guerra
Maria Luisa Guerra, Asst. Supt. for Instructional Services

Within Budgetary Allocations: Sylvia D. Garcia
Sylvia D. Garcia, Director of Finance

Approved by:
Rigoberto V. Abrego, Asst. Supt for Finance/Operations

Recommended by: Rene Gutierrez
Dr. Rene Gutierrez, Superintendent of Schools

EXHIBIT_____ PAGE(S)_____

09-02-10 P03:34 OUT

Notes for Proposal Tabulation
RFP 10-198, Fine Arts – Band Consultants
September 14, 2010

1. **USER DEPARTMENT:** This proposal was requested by the Fine Arts Department. Nelinda Villarreal will be present to answer any detailed questions regarding this proposal.

2. **TYPE OF PROPOSAL:** This is a term proposal beginning September 15, 2010 and ending June 30, 2011. There will be an option to renew annually for an additional two years, if all parties agree to the renewal in writing. In no instance shall this extension be considered automatic. There will be no price increase allowed on these specifications for the duration of the contract renewals.

3. **PROPOSAL EVALUATION:** This proposal was evaluated by Nelinda Villarreal from the Fine Arts Department. Final recommendations to the board are done by the Superintendent of Schools.

4. **ORDERING INFORMATION:** The Band Directors will prepare the Purchase Orders on an "as needed basis".

5. **AMOUNT SPENT LAST YEAR:** $42,000.00

6. **AWARD RECOMMENDATION: $42,000**
   Fine Arts recommendation is to award all consultants who submitted this proposal to give Directors the flexibility to have a consultant available when they are needed.

CONSULTANT	COST	HOLD HARMLESS AGREEMENT
Mariachi Consultant/Clinician This consultant/clinician will be hired for the purpose of teaching tradition and contemporary mariachi ensemble techniques and pedagogy. Clinician will be required to conduct group rehearsals and instructs and coaches members in their individual parts: in fundamentals of musicianship, ensemble performance; plays instrument to demonstrate musical scales, tones, and rhythm; instructs students in music theory, harmony, score and sight reading, composition, and music appreciation; provides individual or group instrumental lessons using technical knowledge, aesthetic appreciation, prescribed teaching techniques; and lead groups under the band umbrella in special performances for school program, community activities, concerts, and festivals. The Consultant/Clinician may also critique performance to identify errors and reinforce correct techniques, and may evaluate students' interests, aptitudes, temperament, and individual characteristics to determine suitable instruction.		
Christian Rangel	$8/hour	yes
Jobel Tobias	$8/hour	yes
Erica Lazo-Elizondo	$18/hour	yes
Francisco Loera	$40/hour	yes
Javier Torres, Jr.	$40/hour	yes
Rafael J. Mendoza	$10/hour	yes
Marco A. Torres	$40/hour	yes
Mariachi- Estudiantina Rhythm Section/Harmonia Consultant This consultant will be hired for the purpose of teaching tradition and contemporary individual and small ensemble guitar, vihuela, and/or guitarron techniques. Consultant will be required to conduct practices and/or sectional ensemble practices.		
Jobel Tobias	$8/hour	yes
Erica Lazo-Elizondo	$18/hour	yes
Francisco Loera	$40/hour	yes
Ivan Perez	$10/hour	yes
Jorge A. Saavedra	$10/hour	yes
Javier Torres, Jr.	$40/hour	yes
Rafael J. Mendoza	$10/hour	yes
Marco A. Torres	$40/hour	yes
Miguel Angel Galvan	$30/hour	yes
Victor Rodriguez	$10/hour	yes

EXHIBIT_____

Mariachi Violin Consultant This consultant will be hired for the purpose of teaching tradition and contemporary individual and small ensemble violin techniques. These techniques are different from classical violin techniques. Consultant will be required to conduct practices and/or sectional ensemble practices.		
Orlando De Leon	$10/hour	yes
Francisco Loera	$40/hour	yes
Rafael J. Mendoza	$10/hour	yes
Mariachi Trumpet Consultant This consultant will be hired for the purpose of teaching tradition and contemporary individual and small ensemble trumpet techniques. These techniques are different from classical trumpet techniques. Consultant will be required to conduct practices and/or sectional ensemble practices.		
Christian Rangel	$8/hour	yes
Josue Cantu	$10/hour	yes
Francisco Loera	$40/hour	yes
Rafael J. Mendoza	$10/hour	yes
Ashley N. Escamilla	$30/hour	yes
Mariachi Vocal Consultant This consultant will be hired for the purpose of teaching tradition and contemporary individual and small ensemble vocal techniques. These techniques are different from classical vocal techniques and pedagogy. Consultant will be required to conduct practices and/or sectional ensemble practices.		
Erica Lazo-Elizondo	$18/hour	yes
Francisco Loera	$40/hour	yes
Javier Torres, Jr.	$40/hour	yes
Rafael J. Mendoza	$10/hour	yes
Marco A. Torres	$40/hour	yes
Mariachi Harp Consultant This consultant will be hired for the purpose of teaching tradition and contemporary individual and small ensemble harp techniques. These techniques are different from classical harp techniques. Harp Techniques and pedagogy is highly specialized. Consultant will be required to conduct practices and/or sectional ensemble practices.		
Miguel Valdez	$8/hour	yes
Francisco Loera	$40/hour	yes
Rafael J. Mendoza	$10/hour	yes
Sound Technician/Engineer This consultant will be hired for the purpose of recording all ensembles under the band umbrella in practice and performance arenas. Consultant will assist band directors in the area of sound amplification and engineering for the ensemble performances. Consultant will be required to record practices and/or performances and may be used for the purpose of laying tracks for a CD or DVD. Sound Techniques and engineering is highly specialized.		
Eduardo Zamorano, Jr.	$40/hour	yes
Rene A. Guzman	$25/hour	yes
Javier Torres, Jr.	$40/hour	yes
Rafael J. Mendoza	$10/hour	yes
Judge This consultant will be hired for the purpose of judging auditions, tryouts and any other performance in the areas of Marching Band, Concert Band, Mariachi, Dance, Colorguard, Solo and Ensemble, Jazz Ensemble, Steel Band, Estudiantina and other auxiliary groups. The judge will assist directors to form a judgment or opinion of a players' or ensemble performance or audition. Judges will decide or settle authoritatively and objectively on final results of audition.		
Abel Ocanas	$30/hour	yes
Pedro Martines	$40/hour	yes
Linda L. Guzman	$25/hour	yes
Susan L. Edmonson	$100/hour	yes
Lamar Burkhalter	$500/day + travel	yes
Eduardo Zamorano, Jr.	$40/hour	yes
Rene A. Guzman	$25/hour	yes
Christian Rangel	$8/hour	yes
Jobel Tobias	$8/hour	yes
Miguel Valdez	$75/hour +	yes
Francisco Loera	$50/hour	yes
Javier Torres, Jr.	$40/hour	yes
Rafael J. Mendoza	$10/hour	yes
Ismael Ledezma	$100/hour	yes
All That Dance	Varies $100+	yes
Crystal Rose Ovalle	$100/day	yes
Victoria A. Guajardo	$12/hour or $100/day	yes
Marco A. Torres	$40/hour	yes
Miguel Angel Galvan	$25/hour	yes

EXHIBIT_____

Marching Band Consultant/Clinician

The consultant/clinician(s) will be hired for the purpose of the instruction of in the area of marching band contemporary and modern techniques. Such techniques will include all types of marching including drum corps. The consultant/clinician may be required to choreograph such routines for the preparation of performing and or competitive routines during the school year. Clinician will be required to conduct group rehearsals and instructs and coaches members in their individual parts: in fundamentals of musicianship, ensemble performance; plays instrument to demonstrate musical scales, tones, and rhythm; instructs students in music theory, harmony, score and sight reading, composition, and music appreciation; provides individual or group instrumental lessons using technical knowledge, aesthetic appreciation, prescribed teaching techniques; and lead groups under the band umbrella in special performances for school program, community activities, concerts, and festivals. The Consultant/Clinician may also critique performance to identify errors and reinforce correct techniques, and may evaluate students' interests, aptitudes, temperament, and individual characteristics to determine suitable instruction. The clinician may be asked to prepare music selections, cut music cd copies, critique routines for creative and or technical weaknesses through audio and or video tape.

Abel Ocanas	$15/hour	yes
Pedro Martines	$40/hour	yes
Roxanne Rivera	$10/hour	yes
Andres Salazar	$15/hour	yes
Noe Ronnie Larralde	$20/hour	yes
Lamar Burkhalter	$500/day + travel	yes
Eduardo Zamorano, Jr.	$20/hour	yes
Rene A. Guzman	$25/hour	yes
Christian Rangel	$8/hour	yes
Saul Regalado	$20/hour	yes
Catherine Salinas	$7.25/hour	yes
Marching Band Consultant/Clinician	$10/hour	yes
Jobel Tobias	$8/hour	yes
Javier Torres, Jr.	$40/hour	yes
Rafael J. Mendoza	$10/hour	yes
Tiffany Cano	$12/hour	yes
South Texas Guard & Dance Designs	$20/hour	yes
Timothy D. Newburn, II	$40/hour	yes
Christopher Tyler	$25/hour	yes
Luis A. Reyes	$20/hour	yes
Rodolfo Regalado, Jr.	$15/hour	yes
Victor Rodriguez	$12/hour	yes
Jose Noriega	$20/hour	yes

Concert Band Consultant/Clinician

The consultant/clinician(s) will be hired for the purpose of the instruction of in the area of concert band contemporary and modern techniques. Such techniques will include all types of concert pedagogy. Clinician will be required to conduct group rehearsals and instructs and coaches members in their individual parts: in fundamentals of musicianship, ensemble performance; plays instrument to demonstrate musical scales, tones, and rhythm; instructs students in music theory, harmony, score and sight reading, composition, and music appreciation; provides individual or group instrumental lessons using technical knowledge, aesthetic appreciation, prescribed teaching techniques; and lead groups under the band umbrella in special performances for school program, community activities, concerts, and festivals. The Consultant/Clinician may also critique performance to identify errors and reinforce correct techniques, and may evaluate students' interests, aptitudes, temperament, and individual characteristics to determine suitable instruction. The consultant may be asked to critique music for creative and or technical weaknesses through audio and or video tape.

Abel Ocanas	$15/hour	yes
Pedro Martines	$40/hour	yes
Andres Salazar	$15/hour	yes
Linda L. Guzman	$25/hour	yes
Susan L. Edmonson	$50/hour	yes
Lamar Burkhalter	$500/day + travel	yes
Eduardo Zamorano, Jr.	$20/hour	yes
Rene A. Guzman	$25/hour	yes
Christian Rangel	$8/hour	yes
Jobel Tobias	$8/hour	yes
Rafael J. Mendoza	$10/hour	yes
Jose Noriega	$25/hour	yes

EXHIBIT_____

Colorguard Consultant/Clinician The consultant/clinician(s) will be hired for the purpose of the instruction of colorguard contemporary and modern techniques. Such techniques will include all types of colorguard techniques and pedagogy. The consultant may be required to choreograph and instruct such routines for the preparation of performing and or competitive routines during the school year. The consultant may be asked to prepare music selections, cut music compact disc/dvd copies, critique routines for creative and or technical weaknesses through audio and or video tape.		
Eduardo Zamorano, Jr.	$20/hour	yes
Rafael J. Mendoza	$10/hour	yes
Tiffany Cano	$12/hour	yes
South Texas Guard & Dance Designs	$20/hour	yes
Timothy D. Newburn, II	$40/hour	yes
Ashley N. De Luna	$12/hour	yes
Rafael J. Mendoza	$10/hour	yes
Katherine Ann Edmundson	$10/hour	yes
Ismael Ledezma	$25/hour	yes
Christopher Tyler	$25/hour	yes
Dance Consultant/Clinician The consultant/clinician(s) will be hired for the purpose of the instruction of dance contemporary and modern techniques. Such techniques will include all types of dance including, but not limited to jazz, hip hop, lyrical, modern, ballet, flamenco, folklorico, and others as deemed necessary. The consultant/clinician may be required to choreograph such routines for the preparation of performing and or competitive routines during the school year. The consultant/clinician may be asked to prepare music selections, cut music copies, critique routines for creative and or technical weaknesses through audio and or video tape.		
Miguel Valdez	$8/hour	yes
Rafael J. Mendoza	$10/hour	yes
Tiffany Cano	$12/hour	yes
South Texas Guard & Dance Designs	$20/hour	yes
All That Dance	Varies due to amount of students	yes
Rebeka Ivette Gonzalez	$20/hour	yes
Lorena Mahtin	$250/dance routine	no
Jose Zamora	$500/clinic	yes
Rocio Molina	$350/choreography, $11/hour dance	yes
Crystal Rose Ovalle	$100/day – clinic, $100/minute of choreography	yes
Silvia Briales	$18/hour	yes
Raul Galvan	$100/hour	yes
Victoria A. Guajardo	$100/minute choreography or $100/day clinic techniques	yes
Christina's Choreographer	$400/routine for field & pep rally or $500 for competition routine (additional fees apply for additional instruction time)	yes
Brass Consultant/Clinician The consultant/clinician(s) will be hired for the purpose of the instruction of in the area of Brass Instrument traditional, contemporary and modern techniques. Such techniques will include the following pedagogy: Trumpet, French Horn, Trombone, Euphonium, Tuba and any other type of brass instrument pedagogy. The consultant may be asked to critique students for creative and or technical weaknesses through audio and or video tape.		
Abel Ocanas	$15/hour	yes
Pedro Martines	$40/hour	yes
Linda L. Guzman	$25/hour	yes
Rene A. Guzman	$25/hour	yes
Christian Rangel	$8/hour	yes
Scott Roeder	$30/hour	yes
Rafael J. Mendoza	$10/hour	yes
Luis A. Reyes	$20/hour	yes
Victor Rodriguez	$12/hour	yes
Jose Noriega	$30/hour	yes

EXHIBIT_____

Woodwind Consultant/Clinician The consultant(s)/clinician (s) will be hired for the purpose of the instruction of in the area of Woodwind Instrument contemporary and modern techniques. Such techniques will include the following pedagogy: Piccolo, Flute, Double Reed Family (Oboe, Bassoon), Clarinet Family (Soprano, Alto, Tenor, Bass, Contra Bass Clarinets) and Saxophone Family (Soprano, Alto, Tenor, Baritone Saxes) . The consultant may be asked to critique students for creative and or technical weaknesses through audio and or video tape.		
Abel Ocanas	$15/hour	yes
Shari Martinez	$40/hour	yes
Roxanne Rivera	$10/hour	yes
Andres Salazar	$15/hour	yes
Susan L. Edmonson	$25/hour	yes
Eduardo Zamorano, Jr.	$20/hour	yes
Lorne William O'Neil	$30/hour	yes
Jobel Tobias	$8/hour	yes
Rafael J. Mendoza	$10/hour	yes
Percussion Consultant/Clinician The consultant(s)/clinician (s) will be hired for the purpose of the instruction of in the area of Percussion Instrument traditional, contemporary and modern techniques. Such techniques will include the following pedagogy: Tuned or Melodic Percussion such as all mallet percussion, timpani, xylophone , marimba, chimes, glockenspiel, and unturned such as Snare, Tenor and Bass drum, drum set, percussion auxiliary instruments such as Triangle, Tambourine, Cymbals, Maracas, Guiro, Castanets, Gong, and ensemble pedagogy such as steel band, salsa band. The consultant may be asked to critique individual students or performances for creative and or technical weaknesses through audio and or video tape.		
Abel Ocanas	$15/hour	yes
Lamar Burkhalter	$500/day + travel	yes
Eduardo Zamorano, Jr.	$20/hour	yes
Marching Band Consultant/Clinician	$10/hour	yes
Rafael J. Mendoza	$10/hour	yes
Jazz Consultant/Clinician The consultant(s) will be hired for the purpose of the instruction of in the area of Jazz Ensemble contemporary and modern techniques. Such techniques will include all types of Jazz Ensemble pedagogy. The consultant may be asked to prepare music selections, and critique routines for creative and or technical weaknesses through audio and or video tape.		
Pedro Martines	$40/hour	yes
Eduardo Zamorano, Jr.	$20/hour	yes
Christian Rangel	$8/hour	yes
Jobel Tobias	$8/hour	yes
Miguel Valdez	$8/hour	yes
Rafael J. Mendoza	$10/hour	yes
Seamstress/Alterations Consultant This consultant will provide sewing/alteration services in all areas of the band program in which uniforms and material is used. Examples are: band uniforms, mariachi uniforms, colorguard uniforms, drum major uniforms, colorguard flags, podium skirts, and marching band props. This service will only be used on a uniform, flag, or other product that has already been created.		
Juan Cuestas	$50+/customized depending on work required	yes
Maria G. Castillo	$4.50/hem	yes
Javier Torres, Jr.	$40/hour	yes
Rafael J. Mendoza	$10/hour	yes
Accompanist Consultant This consultant will provide piano accompanist services for the band department in the areas of individual solo and ensemble preparation and special concert band performances.		
Balvina Dornbusch	$30/hour	was not notorized
Dr. Albert Christopher Munn	$30/student/district $50/student/state	yes
Rafael J. Mendoza	$10/hour	yes
Designer Consultant/Clinician This consultant will provide designer services in the area of marching band drill design, marching band visual design, marching band choreographer, uniform design, and general band program needs. The design consultant/clinician will provide creative, unique, and high quality design unlike any other. This service will work under a sole source service because of the custom nature of the service.		
Lamar Burkhalter	$500/day + travel	yes
Rafael J. Mendoza	$10/hour	yes
Timothy D. Newburn, II	$3,000/show	yes
All That Dance	no fee	yes
Arranger Consultant/Clinician This consultant will provide music arrangement services in all areas under the band umbrella. The design consultant/clinician will provide creative, unique, and high quality arrangements. Individual directors will be required to secure copyright permission before contracting for this service. This service will work under a sole source service because of the custom nature of the service.		
Pedro Martines	$40/hour	yes
Lamar Burkhalter	$500/day + travel	yes
Eduardo Zamorano, Jr.	$40/hour	yes
Rafael J. Mendoza	$10/hour	yes

EXHIBIT_____

Uniform/Flag Creation Consultant This consultant will bids for providing sewing/alteration services in all area of the band program in which uniforms and material is used. Examples are: band uniforms, mariachi uniforms, colorguard uniforms, drum major uniforms, colorguard flags, podium skirts, and marching band props. This service will only be used on a uniform, flag, or other product that has never been created. This creation may also be custom and unique in nature.		
Juan Cuestas	$50+/cost depending on design and materials requested	Yes
Rafael J. Mendoza	$10/hour	yes
South Texas Guard & Dance Designs	$20/hour	yes
All That Dance	no fee	yes
Steel Band Consultant This Consultant/Clinician will be hired for the purpose of teaching steel band individual, small ensemble, and large ensemle techniques and pedagogy. Clinician will be required to conduct individual and group rehersals and instruct teachers and students in the fundamentals of musicianship and ensemble performance.		
Eduardo Zamorano, Jr.	$20/hour	yes
Rafael J. Mendoza	$10/hour	yes
Guitar Consultant This Consultant/Clinician will be hired for the purpose of teaching Guitar or related string instruments. Areas of expertise may include: world music, Spanish, traditional Mexican, blues, classical, rock, and any related music genre. Clinician will be requied to conduct individual and group rehearsals and instruct teachers and students in the fundamentals of musicianship and ensemble performance.		
Eduardo Zamorano, Jr.	$20/hour	yes
Jobel Tobias	$8/hour	yes
Miguel Valdez	$8/hour	yes
Erica Lazo-Elizondo	$18/hour	yes
Francisco Loera	$40/hour	yes
Javier Torres, Jr.	$35/hour	yes
Hugo Yanez	$40/hour	yes
Rafael J. Mendoza	$10/hour	yes
Marco A. Torres	$40/hour	yes
Miguel Angel Galvan	$30/hour	yes

EXHIBIT_____

10-198, BAND CONSULTANTS

9235
ABEL ACUNA
RT 15 BOX 4085
EDINBURG, TX 78541

9267
OCANAS ABEL
3003 AGGIE DR.
EDINBURG, TX 78539

9287
ALBERT ORTIZ
301 E. LA VISTA AVE. #11
MCALLEN, TX 78501

9252
ALDO GARCIA
3117 E IVONNE
EDINBURG, TX 78539

9244
ALICIA KARINA CONTRERAS
308 VILLARREAL AVE
EDINBURG, TX 78542

9276
ANDRES E. SALAZAR
4607 PHYLLIS LANE
EDINBURG, TX 78542

9679
ANDRES SALAZAR
4607 PHYLIS LANE
EDINBURG, TX 78542

9260
ANGELA KEEBAUGH
4835 MILE 9 RD
EDINBURG, TX 78541

9275
ANISSA ROMO
4343 W LOPEZ DR
EDINBURG, TX 78539

9683
ANNA MARIE SILVAS
PO BOX 879
BEEVILLE, TX 78104

9649
AUGUSTIN GARZA
915 E TOM LANDRY
MISSION, TX 78572

9657
BRYAN HONL
409 E IRIS AVE
MCALLEN, TX 78501

9288
CARLOS DAVID RODRIGUEZ II
2602 BLUE RIDGE DR
EDINBURG, TX 78539

9666
CARLOS MORENO-GARCIA
57 MARLOW DR
OAKLAND, CA 94605

9263
CARLOS X LEAL
3711 W CHAPIN
EDINBURG, TX 78539

9680
CATHERINE SALINAS
815 BOARDWALK
EDINBURG, TX 78539

9257
CHASE HIGGINS
74 MELBOURNE AVE SE #4
MINNEAPOLIS, MN 55414-3514

9668
CRYSTAL OVALLE
320 S 26TH
MCALLEN, TX 78501

9685
DAVID SMITH
2111 W 29TH ST
MISSION, TX 78574

9262
DENA DENISE LAUREL
508 ACASIA AVE
RIO GRANDE CITY, TX 78582

9331
DEREK J. LEAL
1014 N. BOSTON COLLEGE DR.
EDINBURG, TX 78541

9290
DIANA TREVINO
4002 W 17-1/2
EDINBURG, TX 78541

EXHIBIT_____

10-198, BAND CONSULTANTS

9277
DOMINIQUE SANCHEZ
7326 ROLLING HILLS DR
HUDSONVILLE, MI 49426

9681
DOMINIQUE SANCHEZ
216 NICKLESS ST APT A5
FRANKENMUTH, MI 48734

9273
DWAYNE ALAN RICE
5754 COLFAX AVE. #8
NORTH HOLLYWOOD, CA 91601

9673
DWAYNE RICE
20526 SPRING LILAC LN
SPRING, TX 77388

9284
EDUARDO ZAMORANO, JR
5406 GWIN RD
EDINGURG, TX 78539

9294
ERICA LAZO - ELIZONDO
RT 6 BOX 541-K
EDINBURG, TX 78541

9660
ERICA LAZO-ELIZONDO
4905 E TEXAS RD
EDINBURG, TX 78542

9674
ESLIEE RINCON
2306 KIMBERLY AVE APT 3
EDINBURG, TX 78541

9651
ESTEBAN GARZA
6098 MADISON ST NE
ALBUQUERQUE, NM 87110

9662
FRANCISCO LOERA
2108 GRAMBLIN ST
MCALLEN, TX 78504

9243
FRANK CHAVARRIA
RT 12 BOX 1055
ADDRESS NOT DELIVERABLE*
EDINBURG, TX 78541

9658
GIANNA IANNELLI
BRONX, NY

9281
HECTOR ELOY SOLIS
2014 E. ALBERTA RD
EDINBURG, TX 78542

9686
HECTOR SOLIS
2014 E ALBERT RD
EDINBURG, TX 78542

9258
HEIKE HOFFER
3601 E. 2ND STREET
APT. 92
TUCSON, AZ 85716-4353

9665
ISHMAEL NATHAN MONCIVAIS
113 ELDORA RD
ALAMO, TX 78516

9678
ISIDRO SALAS
9406 CARMALLE
HOUSTON, TX 77075

9264
ISMAEL LEDESMA
3205 E. ELIZABETH ST
EDINBURG, TX 78541

9661
ISMAEL LEDEZMA
3205 E ELIZABETH ST
EDINBURG, TX 78539

9279
J.D. SHAW
8730 HAMPDEN DRIVE
TAMPA, FL 33626

9633
JACKIE ALONZO
5522 N KENYON RD
EDINBURG, TX 78542

9282
JAVIER TAPIA
6720 N KENYON RD
EDINBURG, TX 78539

EXHIBIT____

10-198, BAND CONSULTANTS

9688
JAVIER TORRES
6800 N 7TH ST APT 3
MCALLEN, TX 78504

9250
JIM EGGER
1309 WESTWAY
MCALLEN, TX 78501

9644
JIM EGGER
1309 WESTWAY
MCALLEN, TX 78501

9253
JOANNA GARZA
1902 RUBY STREET
EDINBURG, TX 78541

9643
JOE EDMONSON
1502 OAKS PLACE
EDINBURG, TX 78539

9682
JOHN SANCHEZ
316 W SAMANO
EDINBURG, TX 78539

9283
JON R. TAYLOR
2136 MYNAH AVENUE
MCALLEN, TX 78504

9687
JON TAYLOR
2136 MYNAH AVE
MCALLEN, TX 78504

9238
JONATHAN LEE ALMANZA
RT 16 BOX 439 U
MAIL RET NO SUCH ADDRESS*
EDINBURG, TX 78539

5871 546-51-8941
JUAN CUESTAS
2720 TYLER AVENUE
MCALLEN, TX 78503

9652
JUAN GARZA
1809 W SCHUNIOR ST APT 603
EDINBURG, TX 78541

9240
JUDE JOSEPH BOUGHTON
651 WILLIAM STREET
TIPTSTON, PA 18640

9265
KARINA A. LOPEZ
4415 EAST CHAPIN
EDINBURG, TX 78541

9659
KYM LANIER
PO BOX 4148
EDINBURG, TX 78540

9241
LAMAR D BURKHALTER
3414 FLAMING CANDLE DR
SPRING, TX 77388

9636
LAUREN BIEDIGER
18806 COUNTRY ROAD 7533
CASTROVILLE, TX 78009

9227
LORNE WILLIAM O'NEIL
4600 EAST IOWA RD
EDINBURG, TX 78539

9289
REYES, LUIS
5506 E TEXAS RD
EDINBURG, TX 78541

9672
LUIS REYES
5506 E TEXAS RD
**DELETED DUPLICATE OF V9289*
EDINBURG, TX 78541

9653
MALORIE GONZALEZ
2832 ERNESTO DR
EDINBURG, TX 78539

9641
MARCO DE LA GARZA
425 KIWI AVE
MCALLEN, TX 78504

9689
MARCO TORRES
6800 N 7TH ST APT 3
MCALLEN, TX 78504

EXHIBIT_____

10-198, BAND CONSULTANTS

9242
MARIA G CASTILLO
3805 SONORA AVE
MCALLEN, TX 78503

9270
MARIO PARTIDA
504 W. FAY
EDINBURG, TX 78539

9278
MATTHEW SERNA
1507 POST OAKS RD
EDINBURG, TX 78539

9271
MATTHEW WAYNE POWER
29222 SHRUNK RUN RD
GOLD BEACH, OR 97444

9245
MELANY A CORTEZ
322 E SCHUNIOR
EDINBURG, TX 78539

9684
MIKE SLOAN
511 TURTLE HILL
SAN ANTONIO, TX 78260

9261
NOE RONNIE LARRALDE
705 E LOEB
EDINBURG, TX 78541

9254
GAITAN, ORLANDO
1502 E ALBERTA
EDINBURG, TX 78539

9647
ORLANDO GAITAN
1502 E ALBERTA
**DELETED DUPLICATE OF V#9254*
EDINBURG, TX 78542

9654
OSCAR GONZALEZ
3528 CATCLAW
RIO GRANDE CITY, TX 78582

9256
OSCAR R HERRERA
6921 N PEKING
MCALLEN, TX 78504

9640
PAM DAVIS
1360 W COUNTY LINE RD APT 5308
RET AS INSUFFIENCE ADDRESS
NEW BRAUNFELS, TX 78130

9251
PAUL FLINCHBAUGH
206 RANCHO VIEJO BLVD
BROWNSVILLE, TX 78520

9291
PEDRO MARTINEZ
PO BOX 3008
EDINBURG, TX 78540

9664
PEDRO MARTINEZ
PO BOX 3008
EDINBURG, TX 78539

9333
RAUL H. GONZALEZ
2105 MYNAH AVENUE
MCALLEN, TX 78504

9293
REBEKA GONZALEZ
815 W COOPER
EDINBURG, TX 78539

9255
RENE & LINDA GUZMAN
6923 N 1ST LANE
MCALLEN, TX 78504

9677
RENE ROSAS
3350 BENYON ST
FT WORTH, TX 76113

9292
RICARDO GONZALEZ
PO BOX 1236
LA BLANCA, TX 78558

9239
RODOLFO B. BARRERA
215 EBONY CIRCLE
RIO GRANDE CITY, TX 78582

9645
ROEL ELIZONDO
3602 PENCIL STICK
RIO GRANDE CITY, TX 78582

EXHIBIT_____

10-198, BAND CONSULTANTS

9268
ROGERIO OLIVAREZ
1457 FAIRGROUNDS RD
RIO GRANDE CITY, TX 78582

9669
ROLANDO PACHECO
1008 1ST ST
MCALLEN, TX 78501

9670
ROMAN PAREGRINO
3408 FRESNO AVE
HIDALGO, TX 78557

9248
RON DUNMORE
6612 N 24TH
MCALLEN, TX 78504

9675
ROXANNE RIVERA
11121 N 23RD ST
MCALLEN, TX 78504

9236
RUBEN ADAME
1608 E 24TH STREET
MISSION, TX 78574

9656
RUDOLFO HERNANDEZ
404 N 29TH ST
EDINBURG, TX 78542

9272
SAUL REGALADO
619 N. ALTEZA DR
EDINBURG, TX 78539

9274
SCOTT ROEDER
2307 LINKS DRIVE
EDINBURG, TX 78542

9280
SHANE SHINSATO
233 LEMON DR
HARLINGEN, TX 78552

9635
SHAY BARES

9285
SILIVA BRIALES
PO BOX 3697
EDINBURG, TX 78540

9249
SUSAN & JOE EDMONSON
1502 OAKS PLACE
EDINBURG, TX 78539

9638
TIFFANY CANO
2203 LA CONDESA
EDINBURG, TX 78539

9667
TIM NEWBURN
10919 W RD #318
HOUSTON, TX 77064

9266
TIMOTHY D. NEWBURN II
10919 WEST RD. #318
HOUSTON, TX 77064

9247
TYLER DEMPSEY
3101 SHORELINE DR #2136
AUSTIN, TX 78728

9237
VANESSA ALEJANDRO
2008 DAMASCO AVE
EDINBURG, TX 78541

9676
VICTOR RODRIGUEZ
PO BOX 182
LA BLANCA, TX 78558

9655
VICTORIA A. GUAJARDO
155 W 60TH ST
NEW YORK, NY 10023

9671
VIVIAN PENA
2013 LUDDEN
EDINBURG, TX 78542

9663
WILLIAM MARTIN
1640 E T C JESTER BLVD APT 921
**RETURN INSUFFICIENT ADDRESS*
HOUSTON, TX 77008

EXHIBIT_____

10-198, BAND CONSULTANTS

9259
YING CHING JETER
1018 HUNTER CHASE
EDINBURG, TX 78539

****

Vendors Printed: 111

****

EXHIBIT____

APPROVAL OF RFP 10-201, TRAVEL AGENCY SERVICES

Superintendent's Recommendation

That the Board of Trustees approve the recommendation to accept the Proposal for Travel Agency Services, which was requested by the Instruction & Support Services.

Rationale

The administration sought competitive sealed Proposals for the Travel Agency Services. Bid opening was held at the Business Office Building on August 16, 2010, at 4:00 P.M. one (1) proposal was received, opened, and read aloud. Please see the attached bid tabulation where the bid most favorable and advantageous to the district on each item is referenced as indicated. The Travel Agency Service is used to make arrangements for scheduling of travel by airlines to conventions and performances. All campuses and departments use this bid.

Budgetary Information

ESTIMATED AWARD RECOMMENDATION **$113,000.00**

Account	Description	Appropriation	Encumbrance	Expenditure	Balance
XXX-XX-6411-XXX-1XX-000	Travel & Substitutes	1,158,116.00	0.00	0.00	1,158,116.00
XXX-XX-6412-XXX-1XX-000	Travel & Substitutes	1,714,541.00	0.00	0.00	1,714,541.00
XXX-XX-6419-XXX-1XX-000	Travel & Substitutes	68,500.00	0.00	0.00	68,500.00
	TOTALS	**2,941,157.00**	**0.00**	**0.00**	**2,941,157.00**

Resource Personnel

Dr. René Gutiérrez
Maria Luisa Guerra
Rigoberto Abrego
Amaro Tijerina
Sylvia D. Garcia
Jacqueline Kingan

Board Policy Reference

This is in accordance with the Board Policy CH, Purchasing Law Bidding Requirements.

Approved by: Maria Luisa Guerra, Asst. Supt. For Instruction/Support Serv.

Within Budgetary Allocations: Sylvia D. Garcia, Director for Finance

Approved by: Rigoberto V. Abrego, Asst. Supt. For Finance/Operations

Recommended by: Dr. René Gutiérrez, Superintendent of Schools

EXHIBIT_____PAGE(S)_____

08-30-10 A11:15 RCVD

Notes for Bid Tabulation
RFP 10-201, Travel Agency Services
September 14, 2010

1. **USER DEPARTMENT**: This bid was requested by Mrs. Maria Luisa Guerra, Assistant Superintendent for Instruction and Support Services who will be present to answer any detailed questions regarding this bid.

2. **TYPE OF BID**: This is a term contract beginning September 15, 2010 or soon thereafter and ending August 31, 2011.

3. **RENEWAL OPTION**: This contract may be renewed for an additional term contract period if the vendor and the Edinburg CISD agree and no increases in cost are incurred except for the growth of the district.

4. **TYPE OF SERVICES**: This bid is for the following services: domestic airline tickets. The Travel Agent will be using the best and lowest government or corporate discount rates available at the time the services are requested.

5. **BID EVALUATION**: There was only one bid. Final recommendations to the board are done by the Superintendent of Schools.

6. **ORDERING INFORMATION**: Each campus and department will prepare purchase orders on an as needed basis following Board of Trustee bid approval.

7. **APROXIMATE AMOUNT SPENT LAST YEAR:** **$113,000.00**

8. **AWARD RECOMMENDATION:**

VENDOR	ESTIMATED AWARD RECOMMENDATION
Shands Brooks Travel 730 West Nolana, Suite 100 McAllen, TX 78504 Contact: Debra E. Brooks PH: 956-687-7202 FX: 956-687-2210	$113,000.00
ESTIMATED TOTAL AWARD	**$113,000.00**

EXHIBIT_____

TABULATION OF
RFP 10-201, TRAVEL AGENCY SERVICES

SHANDS BROOKS TRAVEL	
Fee schedule & rate	1. $20.00 per ticket transaction 2. No additional service fees 3. All airline imposed fees will apply
Office hours	Monday thru Friday 8:30 a.m. to 6:30 p.m.
References from other school districts	1. McAllen ISD 2. Mission ISD 3. Weslaco ISD 4. Valley View ISD 5. South Texas College
Accepts P.O.'s	Yes

EXHIBIT_____

10-201, TRAVEL AGENCY SERVICE

8335
AVION TRAVEL
4021 LOMITA ST
EDINBURG, TX 78541

8339
D & S TRAVEL
301 EAST HALL ACRES ROAD
PHARR, TX 78577

8794 465-47-7743
DISCOVERY (NICOLAS ESCAMILLA)
2210 N. CAGE BLVD.
PHARR, TX 78577

8341
ELLIE'S TOURS & TRAVEL
2721 SOUTH 10TH STREET
McALLEN, TX 78501

5045
FREEDUMB TRAVELS GROUP LLC
4144 D YOUVILLE TRCE
CHAMBLEE, GA 30341

8336
KEVINS TRAVEL AGENCY
817 NORTH WARE ROAD
McALLEN, TX 78501

4597 741-99-4982
SCOTTIE'S TOUR & TRAVELS INC
2717 N 10TH
MCALLEN, TX 78501

6497 84-1723837
THE CHARTERBUS.COM
5714 N. 34TH STREET
MCALLEN, TX 78504

4915
TRAVEL EXPERT
7001 NORTH 10TH STREET
SUITE D
MCALLEN, TX 78504

8340
CHUCK OLSON TOURS
3827 NORTH 10TH STREET
SUITE 205
McALLEN, TX 78501

6482 47-0846861
DEL VALLE GRAND TURISMO INC
1015 WEST MINNESOTA
PHARR, TX 78577

4573
ECHO TRAVEL AGENCY
1903 SOUTH CLOSNER
SUITE 2
EDINBURG, TX 78539

922 74-2900702
EXPRESS TRAVEL
1001 SOUTH 10TH STREET
SUITE P
MCALLEN, TX 78501

8377
GO WITH JO
910 DIXIELAND ROAD
HARLINGEN, TX 78550

9059 37-1558789
MARTIN TOURS AND TRAVEL
3602 PECAN GROVE DRIVE
WESLACO, TX 78596

8337
SHANDS-BROOKS TRAVEL
730 NOLANA, SUITE 100
McALLEN, TX 78504

8338
TRAVEL ADVISORS
1800 SOUTH MAIN STREET
SUITE 490
McALLEN, TX 78503

705
TRAVELS ONLY
523 SOUTH CLOSNER
EDINBURG, TX 78539

****

Vendors Printed: 18

****

EXHIBIT_____

APPROVAL TO PURCHASE AV MULTIMEDIA SOFTWARE FROM AWARDED VENDORS THROUGH THE REGION ONE LIBRARY PURCHASING COOPERATIVE FOR THE FISCAL SCHOOL YEAR 2010-2011 BY THE LIBRARY SERVICES DEPARTMENT FOR THREE HIGH SCHOOLS, FIVE MIDDLE SCHOOLS, AND THIRTY ELEMENTARY SCHOOLS

SUPERINTENDENT'S RECOMMENDATION:

That the Board of Trustees approve the recommendation to purchase AV Multimedia Software from awarded vendors through the Region One Library Purchasing Cooperative for the fiscal school year 2010-2011 by the Library Services Department for three High Schools, five Middle Schools, and thirty Elementary Schools.

RATIONALE:

The Region One ESC sought competitive sealed bid proposals on the above mentioned Library Books on Tuesday, February 23, 2010 until 3:00 p.m. The AV Multimedia Software bids were awarded on June 29, 2010 by Region One ESC Board of Directors with a term bid beginning July 1, 2010 and ending June 30, 2011.

PAPERWORK IMPACT:

This will not generate additional paperwork from the District.

BUDGETARY INFORMATION:

Estimated Cost: $76,420.00

199-12-6397-56-XXX-099060

Account	Description	Appro.	Enc.	Expen.	Bal.
199-12-6397-56-XXX-199060	AV Multimedia Software	$76,420.00	0	0	$76,420.00

RESOURCE PERSONNEL:

Dr. René Gutiérrez, Superintendent of Schools
Maria Luisa Guerra, Assistant Superintendent for Instruction and Support Services
Rigoberto V. Abrego, Assistant Superintendent for Finance and Operations
Sylvia D. Garcia, Director of Finance
Amaro Tijerina, Purchasing Coordinator
Liza M. Guerra, Library Services Supervisor

Prepared by: Liza M. Guerra

Approved by: Maria Luisa Guerra

Within Budgetary Allocation: Sylvia D. Garcia

Finance Department Approval: Rigoberto V. Abrego

Recommended by: Dr. René Gutiérrez
Superintendent of Schools

EXHIBIT _____ PAGE(S) _____

Notes for Bid Tabulation
AV MULTIMEDIA SOFTWARE
THROUGH THE REGION ONE
LIBRARY PURCHASING COOPERATIVE
Bids Awarded on June 29, 2010
by ESC Board of Directors

1. **USER DEPARTMENTS:** This bid will be used by the Librarians of the district for the purchase of AV Multimedia Software.

2. **TERM BID:** This bid is a term bid beginning July 1, 2010 and ending June 20, 2011.

3. **TOTAL ESTIMATED BID AWARDED:** $76,420.00

4. **APPROXIMATE AMOUNT SPENT LAST YEAR:** $81,250.00

5. **BUDGET INFORMATION:** Each campus will issue purchase orders based on their approved budgets for AV Multimedia Software with school board approval.

CAMPUS	ACCOUNT #	DESCRIPTION	APPROP.	ENCUM.	EXPEND.	BALANCE
EHS	199-12-6397-56-001-199060	AV Multimedia Software	$4,000	0	0	$4,000
JEHS	199-12-6397-56-002-199060	AV Multimedia Software	$4,000	0	0	$4,000
ENHS	199-12-6397-56-003-199060	AV Multimedia Software	$4,000	0	0	$4,000
B.L. Garza MS	199-12-6397-56-043-199060	AV Multimedia Software	$3,500	0	0	$3,500
South MS	199-12-6397-56-044-199060	AV Multimedia Software	$3,500	0	0	$3,500
Memorial MS	199-12-6397-56-045-199060	AV Multimedia Software	$3,500	0	0	$3,500
Barrientes MS	199-12-6397-56-046-199060	AV Multimedia Software	$3,500	0	0	$3,500
Harwell MS	199-12-6397-56-047-199060	AV Multimedia Software	$3,500	0	0	$3,500
Austin	199-12-6397-56-101-199060	AV Multimedia Software	$960	0	0	$960
Brewster	199-12-6397-56-102-199060	AV Multimedia Software	$960	0	0	$960
Hargill	199-12-6397-56-103-199060	AV Multimedia Software	$960	0	0	$960
Betts	199-12-6397-56-104-199060	AV Multimedia Software	$960	0	0	$960
Jefferson	199-12-6397-56-105-199060	AV Multimedia Software	$960	0	0	$960
Trevino	199-12-6397-56-106-199060	AV Multimedia Software	$960	0	0	$960
Lee	199-12-6397-56-107-199060	AV Multimedia Software	$960	0	0	$960
Lincoln	199-12-6397-56-108-199060	AV Multimedia Software	$960	0	0	$960
Guerra	199-12-6397-56-109-199060	AV Multimedia Software	$960	0	0	$960
De Zavala	199-12-6397-56-110-199060	AV Multimedia Software	$960	0	0	$960
Travis	199-12-6397-56-111-199060	AV Multimedia Software	$960	0	0	$960
F. Gonzalez	199-12-6397-56-112-199060	AV Multimedia Software	$960	0	0	$960
Johnson	199-12-6397-56-113-199060	AV Multimedia Software	$960	0	0	$960
Canterbury	199-12-6397-56-114-199060	AV Multimedia Software	$960	0	0	$960
Monte Cristo	199-12-6397-56-115-199060	AV Multimedia Software	$960	0	0	$960
Escandon	199-12-6397-56-116-199060	AV Multimedia Software	$960	0	0	$960
De La Vina	199-12-6397-56-117-199060	AV Multimedia Software	$960	0	0	$960
San Carlos	199-12-6397-56-118-199060	AV Multimedia Software	$960	0	0	$960
Truman	199-12-6397-56-119-199060	AV Multimedia Software	$960	0	0	$960
Eisenhower	199-12-6397-56-120-199060	AV Multimedia Software	$960	0	0	$960
Kennedy	199-12-6397-56-121-199060	AV Multimedia Software	$960	0	0	$960
Cano/Gonzalez	199-12-6397-56-122-199060	AV Multimedia Software	$960	0	0	$960
Cavazos	199-12-6397-56-123-199060	AV Multimedia Software	$960	0	0	$960
Villareal	199-12-6397-56-124-199060	AV Multimedia Software	$960	0	0	$960
Avila	199-12-6397-56-125-199060	AV Multimedia Software	$960	0	0	$960
Magee	199-12-6397-56-126-199060	AV Multimedia Software	$960	0	0	$960
Esparza	199-12-6397-56-127-199060	AV Multimedia Software	$960	0	0	$960
Crawford	199-12-6397-56-128-199060	AV Multimedia Software	$7,000	0	0	$7,000
Ramirez	199-12-6397-56-129-199060	AV Multimedia Software	$7,000	0	0	$7,000
Flores/Zapata	199-12-6397-56-130-199060	AV Multimedia Software	$7,000	0	0	$7,000
			$76,420	0	0	$76,420

EXHIBIT_____PAGE(S)

EXHIBIT _____

CompanyName	Website	Address	City	State	ZipCode
Website--Catalog Name					
2010-11 Discount	2011-12 Discount	Shipping/Handling	Vendor Bid Comments		
Deviations					

AUDIOVISUAL / MULTIMEDIA EQUIPMENT

[redacted]		[redacted]	[redacted]	[redacted]	[redacted]
Catalog; Product Price List					
0% as per catalog	0% as per catalog	8%			
No	Price increases effective June 1, 2010				
[redacted]		[redacted]	[redacted]	[redacted]	[redacted]
Catalog &SMART Technologies MSRP Pricelist					
*A. 5-40% & B. 0-35%	*A. 5-40% & B. 0-35%	*See attached document for more information. A. Audiovisual & Presentation Equipment Catalog - B. SMART Technologies MSRP Pricelist			
Yes	See attached document with deviations				
[redacted]	[redacted]	[redacted]	[redacted]	[redacted]	[redacted]
Catalog					
*0%	*0%	*Catalog prices reflect up to 81.25% off M>S>R>P>			
No					
[redacted]	[redacted]	[redacted]	[redacted]	[redacted]	[redacted]
catalog and website					
*10-75%	*10-75%	*Discount varies by manufacturer--See attached discount price schedule			
No					
[redacted]		[redacted]	[redacted]	[redacted]	[redacted]
*0%	*0%	*There is a discount if the item is on promotion.			
Yes	Depends on weight and if this is an expediated order.				
[redacted]		[redacted]	[redacted]	[redacted]	[redacted]
???					
0-15%	0-15%				
Yes	Best Buy for Business will charge shipping for some items. Shipping charges shall be based on the weight of each product. Large, heavy items (over 40 olbs.) will be subject to shipping charges. For an individual quote on product and shipping charges,should they apply, please contact Account Manager Alan Bischof.				

CompanyName	Website	Address	City	State	ZipCode
Website--Catalog Name					
2010-11 Discount	2011-12 Discount	Shipping/Handling	Vendor Bid Comments		
Deviations					
[redacted]	[redacted]	[redacted]	[redacted]	[redacted]	[redacted]
www.bookdepot.com					
65%	65%				
Yes	www.bookdepot.com lists all or products with net costs. Order minimum is $250.00 before ship costs. Ship costs are based on weight and destination. Ship costs start in Buffalo, NY.				
[redacted]		[redacted]	[redacted]	[redacted]	[redacted]
www.borders.com					
0-25%*	0-25%*	up to 4.50 / carton (determined by weight)	* See attachment . Attachment A with Discount Percentage, Discount Exceptions, And Discount LimitationsBorders, Inc. discounts from retail price. View current catalog at www.borders.com..		
Yes					
[redacted]	[redacted]	[redacted]	[redacted]	[redacted]	[redacted]
Brodart Supplies & Furnishings 2010 Catalog					
15%	15%				
No	Reference Quote# DTEXAS when placing order. 15% OFF CURRENT FULL LINE LIBRARY & FURNISHINGS CATALOG. No minimum order. FOB: Supplies: Destination - Furniture & Equipment: Origin (prepaid & added to invoice). Discounts apply only to products, not toshipping charges and may not be combined with any other preferred pricing. Not applicable to closed orders and orders already in process. Some exclusions apply; call for details. Discounts are taken from current catalog prices at time of order. New catalogs distributed annually in January. Delivery: Library, Audiovisual & Archival Supplies: 7/10 days after receipt of order of in-stock items. Furniture & Equipment: 4/6 weeks after receipt of order. Terms: Net 30 Days. Bid is in effect until 06/30/2012.					
[redacted]		[redacted]	[redacted]	[redacted]	[redacted]
Budgeted 2010-2011 K-12 Catalog					
*3%	*3%	*Take an additional 3% off our catalog price. Our catalog is already discounted up to 40% off publisher pricing. Discounts offered here will be off our then current catalog/web pricing which is updated in April each year.			
No	Please note: We are sending you our full catalog with this bid. We have noted on the front what page our NEW products begin on. We are willing to discount any item, however, the items this bid requires begin on page 417.				
[redacted]	[redacted]	[redacted]	[redacted]	[redacted]	[redacted]
0-30%	0-30%				
No					
[redacted]		[redacted]	[redacted]	[redacted]	[redacted]
??					
10%	10%	8% on orders over $300 - Varies			
No					

EXHIBIT _____

Library Purchasing Cooperative Bids Awarded
Period Of July 1, 2010 - June 30, 2012
Bid# 10-04-12

CompanyName	Website	Address	City	State	ZipCode
Website--Catalog Name					

2010-11 Discount	2011-12 Discount	Shipping/Handling	Vendor Bid Comments	Deviations
DLB Educational Corp.			**14110 Lathe Rd.**	**Houston**	**TX**	**77000**
??						
0%	0%	0%				
No						
Edson Publishing Group			**30 Montauk Boulevard**	**Oakdale**	**NY**	**11769**
Catalog						
7%	7%					
No						
eInstruction Corporation			**300 N. Carroll**	**Denton**	**TX**	**76201**
??						
*10%	*10%		*Contact Frank Diaz, eInstruction Educational Consultant, for additional pricing for large volume purchase.			
No	See attached shipping & handling policy					
Films Media Group			**200 American Metro Blvd. Ste. 124**	**Hamilton**	**NJ**	**08619**
Catalog						
15%	15%					
Yes	Third party items are excluded from discount.					
Follett Library Resources, Inc.			**1340 Ridgedale Drive**	**McHenry**	**IL**	**60050**
Catalogs--Website						
*0%	*0%		*Net Catalog Prices. Follett Library Resources, Inc. offers Playaway, MP3-CD, DVD, Blu-Ray DVD. CD, Read-Along Kits, VHS and audiocassette titles. There is no charge for the shipping of audiovisual materials. In addition, Follett Library Resources, Inc. offers full processing for every audiovisual title.			
No						
Gaylord Bros.		**www.gaylord.com**	**P O Box 4901**	**Syracuse**	**NY**	**13221**
??						
20%	20%	Goes by weight & destination--free shipping on orders over $100				
Yes	Free shipping on supply & archival orders only that subtotal over $100.00. Free shipping does not apply to furniture.					

CompanyName	Website	Address	City	State	ZipCode
Website--Catalog Name					

2010-11 Discount	2011-12 Discount	Shipping/Handling	Vendor Bid Comments	Deviations
Highsmith Inc.			**401 S. Wright Road**	**Janesville**	**WI**	**53546**
Highsmith 2009-10 Catalog [Region One ESC Discount No. 121304 Keycode 13138N]						
*13% Minimum order $25.00	*13% Minimum order $25.00	Stock shipping included. Non-stock varies by item.	*See enclosed discount letter 121304 for details. Discounts NOT valid on LibrarySparks magazine, Edupress and Learning Well brands, 3M & Checkpoint security products, sale catalogs, orders already in progress, in conjuction with other offers or with other discounts. Additional charges for inside delivery, lift gate delivery or prior notification may be prepaid and added to your invoice.			
Yes	See clarification letter.					
Lakeshore Learning Materials		**www.lakeshorelearning.com**	**2695 E. Dominguez St.**	**Carson**	**CA**	**90895**
catlaog, website						
5%	5%		Note "PER BID 10-04-12" on all orders to ensure you receive the proper terms.			
No						
Long's Electronics, Inc.			**2000 8th Avenue South**	**Irondale**	**AL**	**35210**
Long's Electronics Catalog 840						
5%	5%	See attached cover letter & catalog	To get special bid pricing, bid number TX20100507-728 must be referenced on all purchase orders.			
Yes	See attached cover letter & catalog					
Priority Technology Services, Inc.			**7041 Katy Freeway #815**	**Houston**	**TX**	**77024**
Price Lists						
30%	30%		Discounts above are off QOMO MSRP. (See attached MSRP catalog) All prices include shipping except for Interactive Whiteboards and stands. (Please add $150 each Interactive Whiteboard and $50 each Whiteboard stand for shipping costs).			
Yes	All prices include shipping except for Interactive Whiteboards and stands. (Please add $150 each Interactive Whiteboard and $50 each Whiteboard stand for shipping costs).					
Pyramid School Products		**www.pyramidsp.com**	**[illegible] Street**	**Tampa**	**Florida**	**33610-2008**
Catalogs H. Wilson Company And Collfone						
15 %	15 %	15 % or $10.00 Min. Charge. Freight Prepaid on Orders Over $ 50.00	Off H. Wilson Cat. And Off Collfone Cat.			
No						
Renaissance Learning, Inc.		**www.renlearn.com**	**2911 Peach Street**	**Wisconsin Rapids**	**WI**	**54495**
website						
*0%	*0%	See the attached addendum for current shipping and processing fee schedule	*Volume discounts may apply to your order(s). See the attached addendum for details.			
Yes	See the attached addendum for deviations.					

EXHIBIT _____

CompanyName	Website	Address	City	State	ZipCode
Safari Montage	www.libraryvideo.com	7 E. Wynnewood Road	Wynnewood	PA	19096
Cost Proposal					
* 0-10%	* 0-10%	3% Minimum Charge $20.00	* Based on purchase of complete system. See complete price list for details.		
Yes S/H					
Show What You Know Publishing	www.showwhatyouknowpublishing.com	PO Box 341348	Columbus	OH	43234-1348
catalog,price sheet and website					
*0%	*0%	12%	*Quantity discounts available. See catalog or price sheet		
Yes See enclosed deviation letter					
SSC Communication Products, Inc.	www.sscom.com	8030 Hedge Lane Terrace	Shawnee Mission	KS	66227
Tandberg/Codian Catalog – Polycom Catalog – Vbrick Catalog – Accordent Catalog – Polyvision Catalog					
3-40% based on manufacturer product code classification	3-40%				
No					
Trexell Communications, Inc.	www.trex.com	28778 Hwy 281 N., Suite 6300-427	San Antonio	TX	78258
catalog and website					
*15-65%	*15-65%		*Discount based on percentage discount off manufacturer's list price for product information please visit www.trex.com		
No					
Visual Learning Company	www.visuallearningco.com	25 Union St.	Brandon	VT	05733
catalog; website					
10%	10%	none			
Yes Discount would not apply to special offers already discounted.					

CompanyName	Website	Address	City	State	ZipCode

AUDIOVISUAL / MULTIMEDIA SOFTWARE

ahal Process, Inc.		421 Jones Rd	Highlands	TX	77562
Catalog; Product Price List					
0% as per catalog	0% as per catalog	8%			
No Price increases effective June 1, 2010					
Audio Visual Aids Corp	www.audiovisualaids.com	2908 N. Flores St.	San Antonio	TX	78212
Catalog					
*0%	*0%		*Catalog prices reflect up to 81.25% off M>S>R>P>		
No					
AVES AUDIO VISUAL SYSTEMS, INC.	www.avesav.com	P O Box 980	Sugar Land	TX	77487
catalog, website					
*10-75%	*10-75%		*Discount varies by manufacturer--See attached discount price schedule		
No					
Best Buy for Business		7601 Penn Ave South	Richfield	MN	55423
???					
0-15%	0-15%				
Yes Best Buy for Business will charge shipping for some items. Shipping charges shall be based on the weight of each product. Large, heavy items (over 40 olbs.) will be subject to shipping charges. For an individual quote on product and shipping charges,should they apply, please contact Account Manager Alan Bischof.					
Borders, Inc		100 Phoenix Drive	Ann Arbor	MI	48108
www.borders.com					
0-25%*	0-25%*	up to 4.50 / carton (determined by weight)	* See attachment .Attachment A with Discount Percentage, Discount Exceptions, And Discount Limitations Borders, Inc. discounts from retail price. View current catalog at www.borders.com.		
Yes					
Capstone Publishers		151 Good Counsel Drive	Mankato	MN	56002-0000
Capstone Digital Catalogs					
*As per current catalog	*As per current catalog		*Catalog offers two prices - list and school/library. School/library is 25% off list price. You will receive the school/library price.		
No					
Cometrex Corporation		2800 Boca Chica Blvd.	Brownsville	TX	78521
??					
25%	25%				
No					

EXHIBIT _____

Library Purchasing Cooperative Bids Awarded

Period Of July 1, 2010 - June 30, 2012

Bid# 10-04-12

Company/Name	Website	Address	City	State	ZipCode
Crystal Productions		**P O Box 2130**	**Glenview**	**IL**	**60025**
Catalog					
20%	20%				
Yes	(1) Discount applies only to full-line catalog. (2) Discount does not apply to supplementary catalogs. (3) Discount does not apply to already special priced items i.e. sets. (4) Vendor is not responsible for discontinuted items.				
Davidson Titles, Inc.	**www.davidsontitles.com**	**P O Box 3588**	**Jackson**	**TN**	**38308-3588**
Davdson and Turtleback Books, catalogs					
*5%	*5%	*OVD Catalog Visit our website, www.davidsontitles.com, for interactive catalogs and more listings. The website is updated daily.			
No					
Delaney Educational Enterprises	**www.dualbooks.com**	**1455 West Morena Blvd.**	**San Diego**	**CA**	**92110**
0-30%	0-30%				
No					
Discovery Education		**One Discovery Place**	**Silver Spring**	**MD**	**20910-3354**
??					
10%	10%	8% on orders over $300 - Varies			
No					
DLB Educational Corp.		**14110 Lathe Rd.**	**Houston**	**TX**	**77080**
??					
0%	0%	0%			
No					
Edson Publishing Group		**30 Montauk Boulevard**	**Oakdale**	**NY**	**11769**
Catalog					
7%	7%				
No					
einstruction Corporation		**308 N. Carroll**	**Denton**	**TX**	**76201**
??					
*10%	*10%	*Contact Frank Diaz, einstruction Educational Consultant, for additional pricing for large volume purchase.			
No	See attached shipping & handling policy				
Encyclopaedia Britannica, Inc.		**310 S. Michigan Avenue**	**Chicago**	**IL**	**60604**
Britannica Software Products for Texas Schools Price List					
See Price List [15%-55%]	See Price List [15%-55%]	Free for Texas			
No					

Company/Name	Website	Address	City	State	ZipCode
Equinox Marketing Group, Inc.		**PO Box 70007**	**Houston**	**TX**	**77270-3307**
0%	0%	8% or Invoice if shipped			
No					
Films Media Group		**200 American Metro Blvd. Ste. 124**	**Hamilton**	**NJ**	**08619**
Catalog					
15%	15%				
Yes	Third party items are excluded from discount.				
Follett Library Resources, Inc.		**1340 Ridgeview Drive**	**McHenry**	**IL**	**60050**
Catalogs--Website					
*	*	*Net Catalog Prices. Follett Library Resources, Inc. is a licensed reseller for Renaissance Learning Reading Software products and minimal shipping charges may apply. All software may be returned within 30 days of invoice at no charge. There is a $25.00 restocking fee per return shipment between 31-60 days. No returns accepted after 60 days. Renaissance Learning Processing/Shipping Fee Schedule included.			
Yes	Deviation: Page 31, Item 10 - Follett Library Resources, Inc. is licensed reseller for Renaissance Learning Reading Software products and minimal shipping charges may apply.				
Gareth Stevens Publishing		**111 East 14th Street, Suite 349**	**New York**	**NY**	**10010**
Catalog: Website					
0%	0%	Free	Reference Bid: Region One ESC Library Purchasing Cooperative/Bid# 10-04-12 on all purchase orders.		
No					
Gaylord Bros.	**www.gaylord.com**	**P O Box 4901**	**Syracuse**	**NY**	**13221**
??					
0%	0%				
No					
Lakeshore Learning Materials	**www.lakeshorelearning.com**	**2695 E. Dominguez St.**	**Carson**	**CA**	**90895**
catalog, website					
5%	5%	Note "PER BID 10-04-12" on all orders to ensure you receive the proper terms.			
No					
Lorito Books, Inc.	**www.LoritoBooks.com**	**10200 W. 75th Place**	**Arvada**	**CO**	**80005**
Brochure & Price List					
*30%	*30%	10% of total order. Free for orders exceeding $200	*In addition to the discount, Lorito Books will offer the following benefits to ESC 1 schools: (1) Free CD replacement. (2) Extra classroom copies of books to go with the audiobook will be available at a 30% discount off the list price. (3) To facilitate shelf-readiness, schools will have their choice of packaging; either in a hang bag or the CD in an adhesive sleeve inside the book.		
No					

EXHIBIT _____

Library Purchasing Cooperative Bids Awarded

Period Of July 1, 2010 - June 30, 2012

Bid# 10-04-12

CompanyName	Website	Address	City	State	ZipCode
Website--Catalog Name					
2010-11 Discount	**2011-12 Discount**	**Shipping/Handling**	**Vendor Bid Comments**		
Deviations					
Modern Educational Resources	**www.modin.com**	**8005 County Road 42 West**	**Burnsville**	**MN**	**55306**
???					
+5%	+5%	Free			
No					
NBC Universal, Inc.	**www.nbclearn.com**	**30 Rockefeller Plaza, Suite 4000-8**	**New York**	**NY**	**10112**
Price List					
See Price List	See Price List		Professional development training is available at $2500/day for up to 25 educators. Not cost effective to offer per-student pricing for campus below a total enrollment of 200. Have set this threshold to meet the needs of small enrollment institutions.Included price discount for year 6.		
No					
Pyramid School Products	**www.pyramidsp.com**	**6610 North 54th Street**	**Tampa**	**Florida**	**33610-1908**
Catalog Colifone .					
15 %	15 %	15 % or $10.00 Min. Charge. Freight Prepaid on Orders Over $ 50.00	Off Colifone Cat.		
No					
Renaissance Learning, Inc.	**www.renlearn.com**	**2911 Peach Street**	**Wisconsin Rapids**	**WI**	**54495**
website					
*0%	*0%	See the attached addendum for current shipping and processing fee schedule	*Volume discounts may apply to your order(s). See the attached addendum for details.		
Yes	See the attached addendum for deviations.				
Rosen Publishing / Powerkids Press	**www.rosenpublishing.com & www.powerkidspress.com**	**29 East 21st Street**	**New York**	**NY**	**10010**
None Provided					
Catalogs already reflect a 25% school & library discount	Catalogs already reflect a 25% school & library discount	Free			
No					
Safari Montage	**www.libraryvideo.com**	**7 E. Wynnewood Road**	**Wynnewood**	**PA**	**19096**
Cost Proposal					
* 0-10%	* 0-10%		* Based on purchase of complete system. See complete price list for details.		
No					

CompanyName	Website	Address	City	State	ZipCode
Website--Catalog Name					
2010-11 Discount	**2011-12 Discount**	**Shipping/Handling**	**Vendor Bid Comments**		
Deviations					
Scholastic Library Publishing, Inc.		**90 Old Sherman Turnpike**	**Danbury**	**CT**	**06816**
catalogs, website					
*0-30%	*0-30%	9% on orders less than $1000	*Scholastic AudioBooks (pages 153-159)--0-30% off price list; Weston Woods--0% off list price (See "Audio Books" Discount attachment.		
Yes	See attached deviations page				
School Media Associates	**www.smavideo.net**	**3815 Live Oak Pkwy 2-B**	**Norcross**	**GA**	**30087**
Brochure					
0%	0%				
No	$9 Handout on Orders under $100.				
School Specialty	**www.schoolspecialty.com**	**W6316 Design Drive**	**Greenville**	**WI**	**54942**
Catalogs					
10% off ENP	10% off ENP	0-15%			
Yes	Please see attached letter for details				
Show What You Know Publishing	**www.showwhatyouknowpublishing.com**	**PO Box 361348**	**Columbus**	**OH**	**43234-1348**
catalog, price sheets, website					
0%	0%	12%			
Yes	See enclosed deviation letter				
SMC Communication Products, Inc.	**www.shasco.com**	**8020 Hedge Lane Terrace**	**Shawnee Mission**	**KS**	**66227**
Tandberg/Codian Catalog -- Polycom Catalog -- Vbrick Catalog -- Accordent Catalog -- Polyvision Catalog					
25-35%	25-35%				
No		**P O Box [illegible]**	**Garland**	**TX**	**75045-1027**
Texas Connection					
Catalog					
0%	0%				
Yes	Shipping Charges--See Shipping Charges Attachment. Prices subject to change (if publisher increases price) this usually only happens with reprints or new edition				
Troxell Communications, Inc.	**www.trox.com**	**[illegible] 407**	**San Antonio**	**TX**	**78238**
catalog and website					
*10%	*10%		*Discount based on percentage discount off manufacturer's list price for product information please visit www.trox.com		
No					
Visual Learning Company	**www.visuallearningco.com**	**25 Union St.**	**Brandon**	**VT**	**05733**
catalog and website					
10%	10%	none			
Yes	Discount would not apply to special offers already discounted.				

EXHIBIT _____

Library Purchasing Cooperative Bids Awarded

Period Of July 1, 2010 - June 30, 2012

Bid# 10-04-12

Company/Name	Website	Address	City	State	ZipCode
Website—Catalog Name					
2010-11 Discount	2011-12 Discount	Shipping/Handling	Vendor Bid Comments		
Deviations					
Windmill Books		**300 Park Avenue South, Suite 1200**	**New York**	**NY**	**10010**
Catalog					
*0%	*0%	Free	Reference Bid: Region One ESC Library Purchasing Cooperative/Bid# 10-04-12 on all purchase orders. *Prcies already reflect 25% school and library discount.		
No					

EXHIBIT _____

APPROVAL OF THE 2010-2011 RENEWAL OF DESTINY RESOURCE MANAGEMENT SOLUTION – DESTINY LIBRARY MANAGER ANNUAL SOFTWARE LICENSE INCLUDING THE STATE STANDARDS &TITLEPEEK SUBSCRIPTION SERVICES FOR THE THREE HIGH SCHOOLS, FIVE MIDDLE SCHOOLS, AND THIRTY ELEMENTARY SCHOOLS

SUPERINTENDENT'S RECOMMENDATION

That the Board of Trustees approve the 2010-2011 Renewal of Destiny Resource Management Solution - Destiny Library Manager Annual Software License including the State Standards & TitlePeek Subscription Services for the three High Schools, five Middle Schools, and thirty Elementary Schools.

RATIONALE

The Destiny Resource Management Solution – Destiny Library Manager entitles the campuses to many services, which provides a centralized web-based workstation located at the Edinburg CISD IT Complex Building on the district's functionality of the software license, technical support, 24/7 online access, over 8 million MARC records for data processing, serves as the District's Library Circulation/Cataloging System Management, provides software updates and data resources, State Standards & TitlePeek Subscription enhances the patron searching experience by providing content enrichment services to titles in the library collection that support and enrich the curriculum of the schools and provides access to the state's curriculum standards that support school librarians, library staff, teachers, students, administrators and any on-line users may search our library books title collection.

Connections to the District Plan: Academic Excellence Performance Goal: Goal 1, District Performance Objective II: Instructional Arrangements, Initiatives I & II Goal 1

PAPERWORK IMPACT

None

BUDGETARY INFORMATION:

Estimated Cost: $ 53,200.00

199-12-6239-56-XXX-199042

Account	Description	Appro.	Enc.	Expen.	Balance
199-12-6399-56-XXX-199042	General Supplies – Site Licenses	$53.200.00	0	0	$53,200.00

RESOURCE PERSONNEL

Dr. René Gutiérrez, Superintendent of Schools
Maria Luisa Guerra, Assistant Superintendent for Instruction and Support Services
Rigoberto V. Abrego, Assistant Superintendent for Finance and Operations
Sylvia D. Garcia, Director of Finance
Amaro Tijerina, Purchasing Coordinator
Liza M. Guerra, Library Services Supervisor

Prepared by: Liza M. Guerra

Approved by: Maria Luisa Guerra

Within Budgetary Allocation: Sylvia D. Garcia

Finance Department Approval: Rigoberto V. Abrego

Recommended by: Dr. René Gutiérrez
Superintendent of Schools

08-23-10 P01:45 RCVD M

EXHIBIT_____PAGES(S)

Tabulation Notes
2010-2011
RENEWAL OF DESTINY RESOURCE MANAGEMENT SOLUTION
- DESTINY LIBRARY MANAGER ANNUAL SOFTWARE LICENSE
INCLUDING THE STATE STANDARDS &
TITLEPEEK SUBSCRIPTION SERVICES

1. **USER DEPARTMENT:** This is a Web-based Centralized Library Management System that will be used by the school district's campus librarians, library staff, teachers, students, administrators, and any on-line users may search our library books title collection.

2. **TERM PERIOD:** This term period begins October 1, 2010 and ends September 30, 2011.

3. **TOTAL ESTIMATE AWARD:** $ 53,200.00

4. **APPROXIMATE AMOUNT SPENT LAST YEAR:** $48,084.86 (Renewal of Destiny Resource Management Solution)

5. **BUDGET INFORMATION:** Library Services Department budgets the appropriation amount needed to process a district quote discount to service all the Edinburg CISD school libraries.

CAMPUS	ACCOUNT #	DESCRIPTION	APPROP.	ENCUM.	EXPEND.	BALANCE
EHS	199-12-6399-56-001-199042	General Supplies-Site Licenses	$ 1,400.00	$ -	0	$ 1,400.00
JEHS	199-12-6399-56-002-199042	General Supplies-Site Licenses	$ 1,400.00	$	0	$ 1,400.00
ENHS	199-12-6399-56-003-199042	General Supplies-Site Licenses	$ 1,400.00	$	0	$ 1,400.00
B.L. Garza MS	199-12-6399-56-043-199042	General Supplies-Site Licenses	$ 1,400.00	$	0	$ 1,400.00
South MS	199-12-6399-56-044-199042	General Supplies-Site Licenses	$ 1,400.00	$	0	$ 1,400.00
Memorial MS	199-12-6399-56-045-199042	General Supplies-Site Licenses	$ 1,400.00	$	0	$ 1,400.00
Barrientes MS	199-12-6399-56-046-199042	General Supplies-Site Licenses	$ 1,400.00	$	0	$ 1,400.00
Harwell MS	199-12-6399-56-047-199042	General Supplies-Site Licenses	$ 1,400.00	$	0	$ 1,400.00
Austin	199-12-6399-56-001-199042	General Supplies-Site Licenses	$ 1,400.00	$	0	$ 1,400.00
Brewster	199-12-6399-56-002-199042	General Supplies-Site Licenses	$ 1,400.00	$	0	$ 1,400.00
Hargill	199-12-6399-56-003-199042	General Supplies-Site Licenses	$ 1,400.00	$	0	$ 1,400.00
Betts	199-12-6399-56-004-199042	General Supplies-Site Licenses	$ 1,400.00	$	0	$ 1,400.00
Jefferson	199-12-6399-56-005-199042	General Supplies-Site Licenses	$ 1,400.00	$	0	$ 1,400.00
Trevino	199-12-6399-56-006-199042	General Supplies-Site Licenses	$ 1,400.00	$	0	$ 1,400.00
Lee	199-12-6399-56-007-199042	General Supplies-Site Licenses	$ 1,400.00	$	0	$ 1,400.00
Lincoln	199-12-6399-56-008-199042	General Supplies-Site Licenses	$ 1,400.00	$	0	$ 1,400.00
Guerra	199-12-6399-56-009-199042	General Supplies-Site Licenses	$ 1,400.00	$	0	$ 1,400.00
Zavala	199-12-6399-56-010-199042	General Supplies-Site Licenses	$ 1,400.00	$	0	$ 1,400.00
Travis	199-12-6399-56-011-199042	General Supplies-Site Licenses	$ 1,400.00	$	0	$ 1,400.00
F.Gonzalez	199-12-6399-56-012-199042	General Supplies-Site Licenses	$ 1,400.00	$	0	$ 1,400.00
Johnson	199-12-6399-56-013-199042	General Supplies-Site Licenses	$ 1,400.00	$	0	$ 1,400.00
Canterbury	199-12-6399-56-014-199042	General Supplies-Site Licenses	$ 1,400.00	$	0	$ 1,400.00
Monte Cristo	199-12-6399-56-015-199042	General Supplies-Site Licenses	$ 1,400.00	$	0	$ 1,400.00
Escandon	199-12-6399-56-016-199042	General Supplies-Site Licenses	$ 1,400.00	$	0	$ 1,400.00
De La Vina	199-12-6399-56-017-199042	General Supplies-Site Licenses	$ 1,400.00	$	0	$ 1,400.00
San Carlos	199-12-6399-56-018-199042	General Supplies-Site Licenses	$ 1,400.00	$	0	$ 1,400.00
Truman	199-12-6399-56-019-199042	General Supplies-Site Licenses	$ 1,400.00	$	0	$ 1,400.00
Eisenhower	199-12-6399-56-020-199042	General Supplies-Site Licenses	$ 1,400.00	$	0	$ 1,400.00
Kennedy	199-12-6399-56-021-199042	General Supplies-Site Licenses	$ 1,400.00	$	0	$ 1,400.00
Cano/Gonzalez	199-12-6399-56-022-199042	General Supplies-Site Licenses	$ 1,400.00	$	0	$ 1,400.00
Cavazos	199-12-6399-56-023-199042	General Supplies-Site Licenses	$ 1,400.00	$	0	$ 1,400.00
Villarreal	199-12-6399-56-024-199042	General Supplies-Site Licenses	$ 1,400.00	$	0	$ 1,400.00
Avila	199-12-6399-56-025-199042	General Supplies-Site Licenses	$ 1,400.00	$	0	$ 1,400.00
Magee	199-12-6399-56-026-199042	General Supplies-Site Licenses	$ 1,400.00	$	0	$ 1,400.00
Esparza	199-12-6399-56-027-199042	General Supplies-Site Licenses	$ 1,400.00	$	0	$ 1,400.00
Crawford	199-12-6399-56-028-199042	General Supplies-Site Licenses	$ 1,400.00	$	0	$ 1,400.00
Florez-Zapata	199-12-6399-56-029-199042	General Supplies-Site Licenses	$ 1,400.00	$	0	$ 1,400.00
Ramirez	199-12-6399-56-030-199042	General Supplies-Site Licenses	$ 1,400.00	$	0	$ 1,400.00
				$ 53,200.00	0	$ 53,200.00

EXHIBIT _____

Edinburg Consolidated Independent School District
Sole Source Affidavit

BEFORE ME, the undersigned official, on this day, personally appeared Robert Ferris. A person known to me to be the person whose signature appears below, who after being duly sworn upon his oath deposed and said:

1. My name is Robert Ferris, I am over the age of 18, have never been convicted of a crime and am competent to sign this affidavit.
2. I am an authorized representative of the following company or firm: Follett Software Company
3. The above named company or firm is the sole source of the following item(s) or product(s): (Attach list if necessary) See attached
4. Competition is providing the above named item(s) is precluded by the existence of a patent, copyright, secret process or monopoly.
5. There is/are no other like item(s) or product(s) available for purchase that would serve the same purpose or function and there is only one price for the above named item(s) or product(s) because of exclusive distribution or marketing rights.
6. We certify that no suspension or debarment is in place, which would preclude receiving a federally funded contract.

(Signature)

SUBSCRIBED AND SWORN to before me on this 24th day of August, 2010

OFFICIAL SEAL
KATHERINE L. KETCHAM
NOTARY PUBLIC, STATE OF ILLINOIS
My Commission Expires 10/28/2011

(Seal)

(Notary Public, State of Illinois)

Katherine L. Ketcham
(Printed Name)

10/28/2011
(Date Commission Expires)

Company Name: Follett Software Company
Address: 1391 Corporate Drive
City, State, Zip: McHenry IL 60050
Telephone: 800-323-3397 Fax: 800-807-3623
Contact Person: Customer Service Email: Customerservice@follettsoftware.com

EXHIBIT_____

EXHIBIT _____

SOLE SOURCE MEMORANDUM

DATE: AUGUST 23, 2010

TO: Assistant Superintendent for Finance & Operations

FROM: Liza M. Guerra CAMPUS: Library Services

SUBJECT: SOLE SOURCE AFFIDAVIT FOR Follett Software Company
(Name of Vendor)

PURCHASE AMOUNT: $ 53,200.00 REQUISITION NO: Pending Board

DESCRIPTION OF ITEMS OR SERVICE: (Attach additional documentation, if necessary)
Destiny Library Mamnagement Solution:

--Centralized Web-based Destiny Resource Management

--TitlePeek Subscription Software License

--State Standardes Subscription Software License

I have contacted a sufficient number of vendors to determine that only one practical source of supply exists. I have initialed the reason(s) why only one source of supply exists and stated it below:

X - **There is no competitive or similar product.**
The good/service is a one-of-a-kind or patented product, a copyrighted publication available from only one source, or a unique item such as an art work.

____ - **The product is only available from a regulated or natural monopoly.** For example, utilities, gravel from the only pit in the area or some similar situation.

X - **The product is a component of an existing system which is only available from one supplier.** The replacement of a component or a repair part is only available from the original supplier.

____ - **The item is produced by non-profit corporations using handicapped workers.** Products made by blind or otherwise handicapped workers are often used by schools, cities, and counties.

____ - **The item is produced by prison workers.** The state benefits from the sale of these items.

____ - ***There are no other items available in the marketplace that have the same fit, form and function of the items being purchased.***

Liza M. Guerra 8/23/10
Signature Date

(Instructions: Campuses & Departments are required to complete this form and attach it to your sole source vendor affidavit. Fax or route all documents, such as Agenda Items, sole source affidavit, sole source memorandum to the Office of Assistant Superintendent for Finance & Operations.)

EXHIBIT _____

Follett Software Company

Thank you for your recent sole source inquiry. The following is a list of proprietary products and services which are solely developed, produced, distributed and supported by Follett Software Company® (FSC). Please note that the scanners offered by FSC contain proprietary software and other functional features designed to operate exclusively with our Destiny® products.

Software:
Destiny Library Manager ™ for Districts
Destiny Library Manager™ for Site
Destiny Textbook Manager™ for Districts
Destiny Textbook Manager™ for Site
Destiny Media Manager™ for Districts
Destiny Media Manager™ for Site
Destiny Asset Manager™ for Districts
Destiny Asset Manager™ for Site
Circulation Plus®
Catalog Plus®
Circulation Plus for Windows™
Catalog Plus for Windows™
Additonal OPAC for Windows™ or Macintosh®
Circulation Plus for Macintosh
Catalog Plus for Macintosh
Union Catalog Plus™
Union Catalog Data Exchange
Z39.50 Server (Z-Force Server™)
WebCollection Plus™ for Windows™ or Macintosh®
WebCollection Plus™ for English/Spanish or English/French
WebCollection Plus™ for Union Catalog
Sagebrush Athena™
Sagebrush InfoCentre™
Sagebrush Spectrum™

Subscription Services:
Alliance Plus™ for Windows™
Alliance Plus™ Online
Alliance Plus™ MARC Database Semi-Annual CD-ROM subscription
Alliance A/V™ MARC Database Online subscription*
WebPath Express® Subscription Service
One Search™ Subscription Service
State Standards Service
TitlePeek™

EXHIBIT _____

Follett Software Company
A Follett Corporation Co.

Follett Services: MARC Entry Service from shelflist
Electronic Data Conversions
Automated Retrospective Conversion (enhancing electronic records)
Technical Support Services
Educational Services
Implementation Services (Networking and System Integration Consultation)
Reading Program Service Data Service for Accelerated Reader®
Reading Program Service Data Service for Reading Counts! ®
Reading Program Service Data Service for Lexiles®
WebPath Express Recon Service

Miscellaneous: MARC Bibliographic Format Guide
MARC Authority Format Guide
Pathways to Knowledge: Information Skills Model
Teaching Electronic Information Skills Guides (K-12)

Hardware: Follett Panther™
ImageTeam® 3800 Linear Imaging Scanner
Follett Transaction Tracker Receipt Printer
In-Hand™

EXHIBIT _____

APPROVAL OF THE CONTRACT WITH DR. DIANA RAMIREZ OF D.M.R. EDUCATIONAL CONSULTING TO PROVIDE TRAINING FOR ELEMENTARY AND SECONDARY SCHOOL TEACHERS FOR THE 2010-2011 SCHOOL YEAR

Superintendent's Recommendation:
That the Board of Trustees approves the contract with Dr. Diana Ramirez of D.M.R. Educational Consulting to provide training for elementary and secondary school teachers for the 2010-2011 school year.

Rationale:

Dr. Ramirez' trainings are specifically designed to familiarize elementary and secondary ELA and secondary Social Studies teachers with the comprehension of TEKS/TAKS as per the state requirements through Literature-Based TEKS Reading Instruction. The training is based on research and scientifically-based practices of effective reading instruction that cover all the Reading First/TAKS objectives to ensure student success.

D.M.R. is a sole source of this training and no other company or firm in the United States of America sells or distributes the products being purchased. Additionally, there is no like item(s) or products available for purchase that would serve the same purpose or function and there is only one price for the name items or products because of exclusive distribution or marketing rights.

This contract was negotiated by Yvonne Chapa, ELA Elementary Specialist and Elizabeth Perez, Secondary Specialist.

> *Connections to the District Plan: of Student Achievement: Academic Goal 1: Academic Excellence* -ECISD will provide a diversified and innovative curriculum that focuses on comprehension, critical thinking , application and problem solving for all students to achieve exemplary performance. District performance: Objective I. Initiative I: Align and connect the curriculum to TEKS and the TAKS objectives.

Paperwork Impact:
No additional paperwork will be generated.

Budgetary Information:
34 training days for elementary and secondary teachers at $2,800.00 a day

Total: 95,200

Account	Appropriation	Encumbrance	Expenditure	Balance
199-13-6216-76-890-199-000	$ 50,00.00	-0-	-0-	$ 50,000.00
199-13-6216-47-890-199-000	$ 45,000.00	-0-	-0-	$ 45,000.00
255-13-6291-76-999-124-000	$ 15,000.00	-0-	-0-	$ 15,000.00
255-13-6291-94-885-124-000	$ 15,000.00	-0-	-0-	$ 15,000.00

Resource Personnel:
Dr. René Gutiérrez, Superintendent of Schools
Maria Luisa Guerra, Assistant Superintendent for Instruction and Support Services
Rigoberto Abrego, Assistant Superintendent for Finance and Operations
Ronaldo Cavazos, Director of Federal Programs
Yvonne Chapa, ELA Elementary Specialist
Elizabeth Perez, ELA Secondary Specialist
Irma Villarreal, Social Studies Specialist

Board Policy Reference and Compliance:
This is in accordance with Board Policy EEL (Local): Contracting for Instruction With Outside Agencies and CH Purchasing and Acquisitions.

Prepared by: Yvonne Chapa
Ronaldo Cavazos / Yvonne Chapa

Approved by: Maria Luisa Guerra
Maria Luisa Guerra

Within Budgetary Allocation: Sylvia D. Garcia
Sylvia D. Garcia

Finance Department Approval:
Rigoberto Abrego

Recommended by: René Gutiérrez
Dr. René Gutiérrez
Superintendent of Schools

➔EXHIBIT _____, PAGE (S) _____

08-25-10P01:45 RCVD M

CONTRACTED SERVICE AGREEMENT

This Contract/Agreement is made and entered into by and between Edinburg CISD, and D.M.R. Educational Consulting, Inc. referred to herein as "Contractor". The parties have severally and collectively agreed and by the execution hereof are bound to the mutual obligations and to the performance and accomplishment of the tasks hereinafter described.

Contractor shall provide professional services, consultation, and expertise for use and benefit to Edinburg Consolidated Independent School District.

Agency shall pay contractor a fee of $ 95,200 for services and related expenses. *

Approved and accepted by Contractor this 11th day of August 2010.

Diana M. Ramirez
Contractor's Signature

Contractor's Name: D.M.R. Educational Consulting, Inc.

Address: 32863 Road 1575 City: Los Ebanos State: TX Zip Code: 78566
EIN # 20-1181087 Contract Period From: _____ to _____

Scope of Work: Literary based TEKS and Expository Reading Instruction for ELA Elementary, Secondary, and Social Studies teachers.

Amount of Fee: $95,200.00

Funding Account Number: 199-13-6216-76-890-099 199-13-6216-47-890-099
255-13-6291-76-999-024 255-13-6291-94-999-024

Contracted Services must be approved 14 days prior of work. A Purchase Order must also be attached. By approval, the supervisor certifies the need for contract services and that sufficient funds are available. The supervisor will also monitor the contracted services. Invoice is required for payment. Invoice must be received in the Business Office by Monday in order to get paid by Friday of that week. Also, a W-9 is required if not already on file for payment.

FOR CONTRACTS OVER $10,000

Termination of Contract: Contractor shall have completed all work covered by this contract and this contract shall terminate unless extended by mutual agreement of the district and the contracted services at the time final service is completed as indicated in paragraph 2 herein. This contract may be terminated by the District if for any reason the Contractor shall fail to fulfill in a timely and proper manner his obligation under this contract, in which event the district may terminate the contract by giving written notice of such termination and the effective date of the termination. In the event of termination prior to completion of the contract, the Contractor shall be entitled to receive just and equitable compensation for any satisfactory work completed to the date of termination. The District may also terminate this contract at any time without cause by the furnishing of a five day written notice from the Senior Financial Administrator to the Contractor, but the contractor will be paid an amount which bears the same ratio to the total compensation as the services actually performed to the total services of this contract, less any compensation previously paid.

	Approved	Not Approved	Signature/Date
Supervisor			
Administrative Assistant			
Superintendent/Designee			

*Contracted Services totaling over $5000.00 require prior board approval.

Nondiscrimination Statement

It is the policy of Edinburg CISD not to discriminate on the basis of sex, age, handicap, religion, race, color, or national origin in its educational programs.

White – Vendor Yellow – Originator Pink – Accounts Payable

EXHIBIT _____

Edinburg Consolidated Independent School District
Sole Source Affidavit

[redacted]

BEFORE ME, the undersigned official, on this day, personally appeared August 16, 2010 A person known to me to be the person whose signature appears below, who after being duly sworn upon his oath deposed and said:

1. My name is Diana M. Ramirez. I am over the age of 18, have never been convicted of a crime and am competent to sign this affidavit.
2. I am an authorized representative of the following company or firm: D.M.R. Educational Consulting, Inc.
3. The above named company or firm is the sole source of the following item(s) or product(s): (Attach list if necessary)
   Literacy Text Reading Shield
   Literacy Text Reader's Notebook Activities
   Expository Text Reading Shield
4. Competition is providing the above named item(s) is precluded by the existence of a patent, copyright, secret process or monopoly.
5. There is/are no other like item(s) or product(s) available for purchase that would serve the same purpose or function and there is only one price for the above named item(s) or product(s) because of exclusive distribution or marketing rights.
6. We certify that no suspension or debarment is in place, which would preclude receiving a federally funded contract.

Diana M. Ramirez
(Signature)

SUBSCRIBED AND SWORN to before me on this 16th day of August, 2010

(Seal)

CARMEN I AMAYA
NOTARY PUBLIC
State of Texas
Comm. Exp. 02-11-2013

Carmen I. Amaya
(Notary Public, State of Texas)

Carmen I. Amaya
(Printed Name)

2/11/2013
(Date Commission Expires)

Company Name: D.M.R. Educational Consulting, Inc.
Address: 328 E3 Road 1575
City, State, Zip: Los Fresnos, Texas 78566
Telephone: 956-792-5678 Fax: 956-233-5844
Contact Person: Diana M. Ramirez Email: Dianarmz@aol.com

EXHIBIT_____

SOLE SOURCE MEMORANDUM

DATE: 8/17/2010

TO: Assistant Superintendent for Finance & Operations

FROM: Yvonne Chapa CAMPUS: Administration

SUBJECT: SOLE SOURCE AFFIDAVIT FOR D.M.R. Educational Consulting
(Name of Vendor)

PURCHASE AMOUNT: $95,200.00 REQUISITION NO:_____

DESCRIPTION OF ITEMS OR SERVICE: (Attach additional documentation, if necessary)
Literary based TEKS Expository Reading Instruction for ELA Elementary, Secondary, and Social Studies teachers.

I have contacted a sufficient number of vendors to determine that only one practical source of supply exists. I have initialed the reason(s) why only one source of supply exists and stated it below:

_____ - **There is no competitive or similar product.** The good/service is a one-of-a-kind or patented product, a copyrighted publication available from only one source, or a unique item such as an art work.

_____ - **The product is only available from a regulated or natural monopoly.** For example, utilities, gravel from the only pit in the area or some similar situation.

✓ - **The product is a component of an existing system which is only available from one supplier.** The replacement of a component or a repair part is only available from the original supplier.

_____ - **The item is produced by non-profit corporations using handicapped workers.** Products made by blind or otherwise handicapped workers are often used by schools, cities, and counties.

_____ - **The item is produced by prison workers.** The state benefits from the sale of these items.

_____ - ***There are no other items available in the marketplace that have the same fit, form and function of the items being purchased.***

Yvonne Chapa
Signature Date

(Instructions: Campuses & Departments are required to complete this form and attach it to your sole source vendor affidavit. Fax or route all documents, such as Agenda Items, sole source affidavit, sole source memorandum to the Office of Assistant Superintendent for Finance & Operations.)

EXHIBIT_____

APPROVAL OF RESOLUTION NO. 2011-01 ADOPTING THE 2010 TAX RATE

Superintendent's Recommendation
That the Board of Trustees approves the Resolution and Ordinance No. 2011-01 setting the 2010 Tax Rate at $1.2398 per $100 of assessed value.

Rationale
The total tax rate of $1.2398, $1.04 for maintenance and operations and $0.1998 for bonded debt would be needed to fund the 2010-2011 Official Budget as approved by the Board of Trustees on August 24, 2010. Section 26.05 (b) of the Property Tax Code states that the motion to adopt the Resolution and Ordinance setting a tax rate does not require the language about "tax increase". This year's proposed tax rate does not exceed the effective tax rate.

Budgetary Information
Not applicable

Resource Personnel
Dr. René Gutiérrez
Rigoberto V. Abrego
Sylvia D. Garcia

Board Policy Reference

This is in accordance with Board Policy, BAA (Legal) Board Powers and Duties.

Prepared by: _____
Sylvia D. Garcia, Director of Finance

Approved by: _____
Rigoberto V. Abrego, Asst. Supt. for Finance/Operations

Recommended by: _____
Dr. René Gutiérrez, Superintendent of Schools

EXHIBIT _____ PAGE(S) _____

RESOLUTION AND ORDINANCE
NO. 2011 - 01

A RESOLUTION AND ORDINANCE ADOPTING THE TAX RATE AND LEVY IN AND FOR THE EDINBURG CONSOLIDATED INDEPENDENT SCHOOL DISTRICT IN EDINBURG, TEXAS FOR THE YEAR 2010 UPON ALL TAXABLE PROPERTY IN SAID SCHOOL DISTRICT, FOR THE PURPOSE OF PAYING THE CURRENT EXPENSES OF SAID SCHOOL DISTRICT FOR THE FISCAL YEAR ENDING AUGUST 31, 2011 AND THE FURTHER PURPOSE OF MAINTAINING A SINKING FUND TO RETIRE THE PRINCIPAL AND INTEREST OF THE BONDED INDEBTNESS OF SAID SCHOOL DISTRICT; PROVIDING FOR PUBLICATION AND AN EFFECTIVE DATE AND DECLARING AN EMERGENCY.

BE IT ORDAINED BY THE BOARD OF TRUSTEES OF THE EDINBURG CONSOLIDATED INDEPENDENT SCHOOL DISTRICT OF EDINBURG, TEXAS:

Section 1: There is hereby levied for the year of 2010 upon all the real property situated within the limits of the Edinburg Consolidated Independent School District of Edinburg, Texas and on all personal property which was owned within said district on the first day of January, 2011 except so much thereof as may be exempt by the Constitution and laws of the State of Texas a total tax of $1.2398 **Dollars** on each **ONE HUNDERED AND NO/100TH (100.00) DOLLARS** of assessed valuation on all of said property. **This year's tax levy to fund maintenance and operations expenditures does not exceed last year's maintenance and operations tax levy. The total tax here now levied as aforesaid, is respectively, as follows:**

Section 2: An ad valorem tax, of and at the rate of $1.04 **DOLLARS** on each **ONE HUNDRED AND NO/100TH (100.00) DOLLARS** of assessed valuation of said taxable property is hereby levied for the year 2010 for general school purposes and to pay the current operating expenses of said School District; for the fiscal year ending August 31, 2011, which tax, when collected shall be appropriated to and deposited in and to the credit of the Maintenance and Operating Fund of said school district of Edinburg, Texas.

Section 3: An ad valorem tax, of and at the rate of $0.1998 **DOLLARS** on each **ONE HUNDRED AND NO/100TH (100.00) DOLLARS** of assessed valuation of said taxable property is hereby levied for the year 2010 for the purpose of maintaining an Interest and Sinking Fund with which to pay the interest and retire the principal of the valid bonded and warrant indebtedness of the school district, now outstanding, and such tax, when collected, shall be appropriated and deposited in and to the credit of the Interest and Sinking Fund of said school district in Edinburg, Texas.

Section 4: The assessed valuation of real and personal property subject to taxation, within the district will be one hundred percent (100%) of its fair market value. The fair market value and assessed value of said property will be determined by the Chief Appraiser for the Hidalgo County Appraisal District or his authorized agents and approved as submitted or amended and approved by the Board of Review for Hidalgo County Appraisal District.

EXHIBIT_____

Section 5: Severability Clause

If any section, part, or provision of the Resolution and Ordinance is declared unconstitutional or invalid, then in that event, it is expressly provided, and it is the intention of the Board of Trustees in passing this Resolution and Ordinance that all other parts of this Resolution and Ordinance shall remain in full force and effect.

Section 6: Publication and Effective Date Clause

This Resolution and ordinance shall be published in a local newspaper as provided by law, and shall be and remain in full force and effect from and after said date of publication.

Section 7: Emergency Clause

The importance of the subject matter hereof creates an emergency and imperative public necessity requiring the suspension of the rule that Ordinances be read on three (3) separate days, and such rule is hereby suspended and said requirement is dispensed with by a vote of not less than majority of all members of the Board of Trustees.

Section 8: Board Approval

A motion was made by _____, and seconded by _____ to pass, approve and adopt this Resolution and Ordinance No. 2011-01 setting the tax rate for the year 2010.

THE FOLLOWING VOTE WAS RECORDED:

Yes: _____ _____

_____ _____

_____ _____

_____

No: _____ _____

_____ _____

_____ _____

_____

Other: _____

PASSED, APPROVED AND ADOPTED this the 14th day of September 2010.

_____
Omar Palacios
President, Board of Trustees

ATTEST: _____
Ciro Treviño, Secretary, Board of Trustees

EXHIBIT_____

APPROVAL OF RFQ 08-35, FINANCIAL ADVISOR SERVICES – THIRD AND FINAL YEAR CONTRACT RENEWAL

Superintendent's Recommendation

That the Board of Trustees approve the recommendation to accept the Third Year Contract Renewal for Finance Advisor Services from Estrada Hinojosa & Company, Inc. as requested by Mr. Rigoberto V. Abrego as being the most favorable and advantageous to the Edinburg CISD.

Rationale

This contract has a three year renewal option. This is the third year contract renewal. Rigoberto V. Abrego and the awarded vendor have agreed in writing to renew this contract for an additional year.

The administration sought Statements of Qualifications for Financial Advisory Services. Qualifications were received at the Business Office Building on August 1, 2007, at 2:30 P.M. where four (4) financial statements of qualifications were received, opened, and read aloud.

User Department

This item was requested by Mr. Rigoberto V. Abrego, Assistant Superintendent for Finance & Operations.

Budgetary Information

AWARD RECOMMENDATION **$32,000.00**

ACCOUNT	APPROPRIATION	ENCUMBRANCES	EXPENDITURES	BALANCE
511-71-6599-XX-XXX-199000	32,000.00	0.00	0.00	32,000.00
TOTAL	**32,000.00**	**0.00**	**0.00**	**32,000.00**

The financial advisory fee will only be charged if there is a bond sale.

Resource Personnel

Dr. René Gutiérrez
Amaro Tijerina
Rigoberto V. Abrego
Jacqueline Kingan
Sylvia D. Garcia

Board Policy Reference

This is in accordance with the Board Policy CH, Purchasing Law Bidding Requirements.

Within Budgetary Allocations: _____
Sylvia D. Garcia, Director for Finance

Approved by: _____
Rigoberto V. Abrego, Asst. Supt. For Finance/Operations

Recommended by: _____
Dr. René Gutiérrez, Superintendent of Schools

EXHIBIT_____PAGE(S)_____

AGREEMENT FOR FINANCIAL ADVISORY SERVICES
By and Between

EDINBURG CONSOLIDATED INDEPENDENT SCHOOL DISTRICT
(Hereinafter referred to as the "Issuer")

And

ESTRADA HINOJOSA & COMPANY, INC.

It is understood that the Issuer will have under consideration from time to time the authorization and issuance of indebtedness in amounts and forms which cannot be determined and that in connection with the authorization, sale, issuance and delivery of such indebtedness of the Issuer, we have been requested to submit a proposal to provide professional services to the Issuer in the capacity of Financial Advisor. We are pleased to comply with this request and submit the following proposal for consideration. This proposal, if accepted by the Issuer, shall become the agreement (the "Agreement") between the Issuer and Estrada Hinojosa & Company, Inc. effective at the date of its acceptance as provided for herein below.

I.

This Agreement shall apply to any and all bonds or tax notes which evidence indebtedness or debt obligations which may be authorized and issued or otherwise created or assumed by the Issuer (hereinafter referred to collectively as the "Debt Instruments") during the term of this contract for which the firm of Estrada Hinojosa & Company provides the services described in paragraph III of this contract. Issuer shall not owe Estrada Hinojosa & Company any fees regarding debt or debt obligations for which Issuer does not use the services of a Financial Advisor.

II.

We agree to provide our professional services and our facilities as Financial Advisor and agree to direct and coordinate all programs of financing as may be considered and authorized during the period in which this Agreement shall be effective and to assume and pay those expenses set out in Appendix A, provided, however, that our obligations to pay expenses shall not include any costs incident to litigation, mandamus action, test case or other similar actions.

III.

We agree to perform the following duties normally performed by financial advisors and all other duties as, in our judgment, may be necessary or advisable:

1. We will conduct a survey of the financial resources of the Issuer to determine the extent of its capacity to authorize issue and service debt. This survey will include an analysis of existing debt structure as compared with the existing and projected sources of revenues which may be pledged to secure payment of debt service and, where appropriate, will include a study of the trend of the assessed valuation, taxing power and present and future taxing requirements of the Issuer. In the event revenues of existing or projected facilities operated by the Issuer are to be pledged to repayment of the Debt Instruments then under consideration, the survey will take into account any outstanding indebtedness payable from the revenues thereof, additional revenues, as projected by consulting engineers employed by the Issuer, resulting from improvements to be

EXHIBIT _____

financed by the Debt Instruments under consideration. We will also take into account future financing needs and operations as projected by the Issuer's staff and consulting engineers or other experts, if any, employed by the Issuer.

2. On the basis of the information developed by the survey described above, and other information and experience available to us, we will submit to the Issuer our recommendations on the Debt Instruments under consideration including such elements as the date of issue, interest payment dates, schedule of principal maturities, portions of prior payment, security provisions, and any other additional provisions designed to make the issue attractive to investors. All recommendations will be based upon our professional judgment with the goal of designing Debt Instruments which can be sold under terms most advantageous to the Issuer and at the lowest interest cost consistent with all other considerations.

3. We will advise the Issuer of current bond market conditions, forthcoming bond issues and other general information and economic data which might normally be expected to influence interest rates or bidding conditions so that the date of sale of the Debt Instruments may be set at a time which, in our opinion, will be favorable.

4. We understand the Issuer has retained, or will retain, firms of municipal bond attorneys (the "Bond Counsel") whose fees will be paid by the Issuer. In the event it is necessary to hold an election to authorize the Debt Instruments then under consideration, we will assist in coordinating the assembly and transmittal to Bond Counsel of such data as may be required for the preparation of necessary petitions, orders, resolutions, ordinances, notices, and certificates in connection with the election.

5. We will recommend the method of sale of the Debt Instruments that, in our opinion, is in the best interest of the Issuer and will proceed, as directed by the Issuer, with one of the following methods:

a. Advertised Sale: We will supervise the sale of the Debt Instrument at a public sale in accordance with procedures set out herein. We reserve the right, alone or in conjunction with others, to submit a bid for any Debt Instruments issued under this Agreement which the Issuer advertises for competitive bids. In compliance with Rule G-23 of the Municipal Securities Rulemaking Board, we will request consent to bid in writing, in any instance wherein we elect to bid, prior to submitting a bid for each installment of Debt Instruments.

b. Negotiated Sale: We will recommend one or more investment banking firms as managers of an underwriting syndicate for the purposes of negotiating the purchase of Debt Instruments and in no event will we participate either directly or indirectly in the underwriting of the Debt Instruments. We will collaborate with any senior managing underwriter selected and Counsel to the underwriters in the preparation of the Official Statement or Offering Memorandum. We will cooperate with the underwriters in obtaining any Blue Sky Memorandum and Legal Investment Survey, preparing the Bond Purchase Contract, Underwriters' Agreement and any other related documents. The costs thereof, including the printing of the documents, will be paid by the underwriters.

c. Private Placement: Upon authorization by the Issuer and acting in its behalf, we will place privately the Debt Instruments directly with institutional investors for a placement fee of $7.50 per $1,000 par value of Debt Instruments issued and placed, which fee will be in addition to the fees set forth in Appendix A attached hereto. We will prepare and provide to the prospective purchasers a Limited Offering Memorandum and other related documents.

EXHIBIT _____

6. When appropriate, we will advise financial publications of the forthcoming sale of the Debt Instruments and provide them with all pertinent information.

7. We will coordinate the preparation of the Notice of Sale and Bidding Instructions, Official Statement, Official Bid Form and such other documents as may be required. We will submit to the Issuer all such documents for examinations, approval and certification. After such examination, approval and certification, we will provide the Issuer with a supply of all such documents sufficient to its needs and will distribute by mail sets of the same to prospective bidders and to banks, life, fire and casualty insurance companies, investment counselors and other prospective purchasers of the Debt Instruments. We also provide sufficient copies of the Official Statement to the purchaser of the debt Instruments in accordance with the Notice of Sale and Bidding Instructions. The expenses associated with printing and distribution of these documents will be paid by the Issuer.

8. We will, after consulting the Issuer, arrange for such reports and opinions of recognized independent consultants we deem necessary and required for the successful marketing of the Debt Instruments.

9. Subject to the approval of the Issuer, we will organize and make arrangements for such information meetings as, in our judgment, may be necessary.

10. We will make recommendations to the Issuer as to the advisability of obtaining a credit rating, or ratings, for the Debt Instruments as, in our opinion, is required for submission to the appropriate company, institution or institutions. In those cases where the advisability of personal presentation of information to the rating agency, or agencies, may be indicated, we will arrange for such personal presentations. The expenses associated with the preparation of information and personal presentations will be paid by the Issuer.

11. We will make recommendations to the Issuer as to the advisability of obtaining municipal bond insurance or other credit enhancement, or qualifications for same, for the Debt Instruments and, when directed by the Issuer, we will coordinate the preparation of such information as, in our opinion, is required for submission to the appropriate company, institution or institutions. In those cases where the advisability of personal presentation of information to the appropriate company, institution or institutions may be indicated, we will arrange for such personal presentations. The expenses associated with the preparation of information and personal presentations will be paid by the Issuer.

12. We will assist the staff of the Issuer at any advertised sale of Debt Instruments in coordinated the receipt, tabulation and comparison of bids and we will advise the Issuer as to the best bid. We will provide the Issuer with our recommendations as to acceptance or rejection of such bid.

13. As soon as a bid for the Debt Instruments is accepted by the Issuer, we will proceed to coordinate the efforts of all concerned to the end that the Debt Instruments may be delivered and paid for as expeditiously as possible. We will assist the Issuer in the preparation or verification of final closing figures incident to the delivery of the Debt Instruments.

14. We will maintain liaison with Bond Counsel in the preparation of all legal documents pertaining to the authorization, sale and issuance of the Debt Instruments. Bond Counsel will

EXHIBIT _____

provide an unqualified legal opinion as to the legality of the issuance of the Debt Instruments at the time of delivery.

15. If requested, we will counsel with the Issuer in the selection of a Paying Agent/Registrar for the Debt Instruments, and will assist in the preparation of agreements pertinent to these services and the fees incident thereto.

16. In the event formal verification by an independent auditor or any calculations incident to the Debt Instruments is required, we will make arrangements for such services.

17. We agree to do, or cause to be done, all work pertaining to the Debt Instruments, obtaining approval, as may be required by the Attorney General, registration by the Comptroller of Public Accounts and delivery to the purchaser. The expenses associated with the printing of the debt instruments will be paid by the Issuer.

18. After the closing of the sale and delivery of the Debt Instruments, we will deliver to the Issuer a schedule of annual debt service requirements on the Debt Instruments. In coordination with Bond Counsel, we will assure that the Paying Agent/Registrar has been provided with a copy of the authorizing ordinance, order or resolution.

19. We will attend any and all meeting of governing body of the Issuer, its staff, representatives or committees as requested and at the Issuer's expense, at all times when we may be of assistance or service and the subject of financing is to be discussed.

20. We will advise the Issuer and its staff of changes, proposed or enacted, in Federal and State laws and regulations which would affect the municipal bond market.

21. We will work with the Issuer, its staff and any consultants employed by the Issuer in developing financial feasibility studies and analyzing alternative financing plans.

IV.

In addition to the services set out above, we agree to provide the following services when so requested:

1. We will provide our advice as to the investment of certain funds of the Issuer. We will, when so directed, purchase those investments authorized to be purchased and we will charge a normal and customary commission for each such transaction.

2. We will provide our advice and assistance with regard to exercising any call and/or refunding of any outstanding Debt Instruments.

3. We will provide our advice and assistance in the development of, and financing for, any capital improvement programs of the Issuer.

4. We will provide our advice and assistance in the development of the long-range financing plan of the Issuer.

5. We will provide any other financial planning services as may be requested by the Issuer.

EXHIBIT _____

V.

The fee due Estrada Hinojosa & Company, Inc. in accordance with Appendix A attached hereto, any other fees as may be mutually agreed and all expenses for which Estrada Hinojosa & Company, Inc. is entitled to reimbursement, shall become due and payable concurrently with the delivery of the Debt Instruments to the purchaser.

VI.

The parties agree that proper venue for any suits arising from this contract will lie exclusively in County and State District Courts, Hidalgo County, Texas.

VII.

This Agreement shall become effective at the date of acceptance (_____, 2010) by the Issuer and remain in effect thereafter for a period of one (1) year from that date, with the option for the School Board to extend the Agreement for an additional one (1) year period during each of the (3) years from the date of acceptance. Provided, however, this Agreement may be terminated with or without cause by the Issuer upon thirty (30) days' written notice. In the event of such termination, it is understood and agreed that only the amount due to Estrada Hinojosa & Company, Inc. for services provided and expenses incurred to the date of termination will be due and payable. No penalty will be assessed for termination of this Agreement. This Agreement is submitted in triplicate originals. When accepted by the Issuer, it, together with Appendix A attached hereto, will constitute the entire Agreement between the Issuer and Estrada Hinojosa & Company, Inc. for the purposes and the considerations herein specified. Acceptance will be indicated by the signature of authorized officials of the Issuer together with the date of acceptance on all three copies and the return of two executed copies to Estrada Hinojosa & Company, Inc.

Respectfully submitted,

ESTRADA HINOJOSA & COMPANY, INC.

By: _____
Noe Hinojosa, Jr.

This agreement is accepted by the Issuer this _____ day of _____. 2010.

EDINBURG CONSLIDATED INDEPENDENT SCHOOL DISTRICT

By: _____

EXHIBIT _____

APPENDEX A

In consideration for the services rendered by Estrada Hinojosa, our fee for each issue of debt instruments will be as follows on any given transaction or issue:

Base Fee - Any Issue - $ 3,750

Plus	$5.00	Per	$1,000 up to	$500,000	or	$6,250	for	$ 500,000	Bonds
Plus	4.50	Per	1,000 next	500,000	or	8,500	for	1,000,000	Bonds
Plus	2.75	Per	1,000 next	1,500,000	or	12,625	for	2,500,000	Bonds
Plus	2.00	Per	1,000 next	2,500,000	or	17,625	for	5,000,000	Bonds
Plus	1.50	Per	1,000 next	5,000,000	or	25,125	for	10,000,000	Bonds
Plus	1.10	Per	1,000 for anything over $10,000,000						

Advanced Refunding Issues - Fees for Advance Refunding Issues shall be the amount shown plus a 10% additional charge.

For any issue of Advanced Refunding Bonds and/or other Debt Instruments involving Escrow Agreements, it is understood and agreed that we will charge, in addition to our Financial Advisory fee, a computer fee to be negotiated on a case by case basis.

In consideration for services unrelated to debt issuance, our fee will be as follows:

Principal/Senior Bankers	$200 per hour
Other Professionals	$125 per hour
Administrative Support	$ 75 per hour

At the time that Debt Instruments are delivered, the Company will bill the District for each issue of Debt Instruments an amount which will include the fee calculated on the above schedule as well as costs and expenses, where applicable, incurred on behalf of the District for the following items, if applicable:

Bond Counsel fees
Bond rating and/or credit enhancement fees
Messenger, overnight delivery, photocopying, postage, and telephone
Personal meetings with bond rating agencies and/or credit enhancement providers
Preparation and printing of the Notice of Sale, Official Statement, and Uniform Bid Form
Preparation of applications to the Texas Education Agency
Preparation and printing of physical securities
Reports of independent auditors or consultants
Travel expenses of District and Company personnel

In all of our financial advisory relationships, Estrada Hinojosa seeks to maximize value for the client. Our fees are competitive in the marketplace, but we do not submit artificially low fee bids just to land the business and then assign a low priority to such client. Estrada Hinojosa works diligently for our fees, and we do not put quotas or barriers on non-billable time spent assisting the client. We are available anytime to consult with the client, whether or not a bond issue is pending.

EXHIBIT _____

Our fees and expenses are contingent on the issuance of debt and payable solely from bond proceeds. Expenses are borne by the firm until a fee statement and expense reimbursement are submitted at the bond issue closing in accordance with the contract between the District and our firm. Our depth of resources and capital base allows Estrada Hinojosa to operate on this basis without creating ongoing costs to the District. At any time between bond issues, Estrada Hinojosa is prepared to report to the District, upon request, the hours spent on financial advisory services and the accumulated expenses being carried forward.

Estrada Hinojosa will request reimbursement of reasonable and actual out-of-pocket expenses in connection with each issuance of debt. Such expenses shall consist of travel and related costs and any transaction fees paid by our firm on behalf of the District.

EXHIBIT _____

APPROVAL OF LEASE SERVICE CONTRACT BETWEEN THE HIDALGO COUNTY ELECTIONS ADMINISTRATOR, ON BEHALF OF HIDALGO COUNTY AND THE EDINBURG CONSOLIDATED INDEPENDENT SCHOOL DISTRICT.

Superintendent's Recommendation

That the Board of Trustees approve the Lease Service Contract between the Hidalgo County Elections Office, on behalf of Hidalgo County and the Edinburg Consolidated Independent School District.

Rationale

A contract needs to be approved between the Hidalgo County Elections Office and the Edinburg Consolidated Independent School District for election services for the November 2, 2010 School Board Election. The following general services will be provided:

A. Procure, provide prepare, program, and distribute adequate election equipment and transport equipment to and from the polling locations, including Early Voting substations and Election Day.
B. Distribute the lists of registered voters to be used in conducting the Election, provided by Hidalgo County Voter Registration pursuant to the request by the District.
C. Provide information for election officers.

The estimated cost for the leasing of equipment and other election services is $15, 434.00 as per attached Leasing Estimate Calculator from the Hidalgo County Elections Department.

The District's legal counsel reviewed and approved the attached contract form.

Budgetary Information

Account	Appropriation	Encumbrance	Expenditure	Balance
199-41-6439-00-702-199000	$40,000	-0-	-0-	40,000

Resource Personnel

Mario H. Salinas
Jacques Trevino
Yvonne Ramon

Board Policy Reference and Compliance

This is in accordance with Board Policy BBB, Board Members: Elections

Approved by: M. H. Salinas
Mario H. Salinas, Asst. Supt. for District Administration

Recommended by: Rene Gutierrez
Rene Gutierrez, Superintendent of Schools

EXHIBIT _____, PAGE(S) _____

THE STATE OF TEXAS §
§ **CONTRACT FOR LEASE ELECTION SERVICES**
COUNTY OF HIDALGO §

This Contract is entered into by and between the HIDALGO COUNTY ELECTIONS ADMINISTRATOR ("ADMINISTRATOR"), Yvonne Ramón, on behalf of Hidalgo County, a political subdivision of the State of Texas, and the Edinburg Consolidated Independent School District hereinafter referred to as "THE ENTITY," pursuant to Texas Election Code Section 31.092.

RECITALS

WHEREAS, THE ENTITY, by appropriate action of its governing body acting in accordance with all applicable laws, has called an election to be held on November 2, 2010 and desires that certain election services be provided by ADMINISTRATOR through her Elections Department; and

WHEREAS, THE ENTITY and ADMINISTRATOR desire to enter into a contract setting out the respective responsibilities of the parties; and

WHEREAS, THE ADMINISTRATOR has provided costs for election services to be rendered by ADMINISTRATOR'S office pursuant to the terms of this Contract, which costs are set out in Article VI hereof; and

NOW, THEREFORE, it is hereby agreed as follows:

Article I. PURPOSE

Section 1.01 The parties hereto have entered into this Contract for election services described in Article II to be provided to THE ENTITY for its election to be held on November 2, 2010 and any Runoff, if applicable.

Article II. SERVICES

Section 2.01 ADMINISTRATOR agrees to provide to THE ENTITY the following general services:

(A) Procure, provide, prepare, program and distribute adequate election equipment, and transport equipment to and from the polling locations, including Early Voting substations and Election Day, for THE ENTITY;
(B) Distribute the lists of registered voters to be used in conducting the election, provided by Hidalgo County Voter Registration pursuant to the request by THE ENTITY; and
(C) Provide information for election officers.

EXHIBIT _____

Article III. SCHEDULE FOR PERFORMANCE OF SERVICES

Section 3.01 Specific services to be provided related to the general services identified in Article II shall be performed in accordance with the time requirements set out in the Texas Election Code.

Article IV. SERVICES NOT PROVIDED BY COUNTY

Section 4.01 ADMINISTRATOR shall have no responsibility for insuring the passage of the appropriate Election Order by THE ENTITY, preparing or sending Justice Department Submissions, publishing and (or) posting the election notice as required by the Texas Election Code Section 4.003, or canvassing election results. ADMINISTRATOR shall have no responsibility as custodian of THE ENTITY'S election records.

Article V. TERM

Section 5.01 Except as hereinafter set out, the term of this Contract shall be from the time of execution until all items with respect to this Contract and the election held hereunder have been completed.

Article VI. COST OF SERVICE AND BILLING

In consideration for the services provided hereunder by ADMINISTRATOR, THE ENTITY agrees to pay ADMINISTRATOR for the following costs of services:

Section 6.01 iVotronic Machines:

(A) One Base charge of $150.00 for Programming iVotronic ballot for voting machines; additional ballot style(s) and request for change of programmed ballot at an additional cost; Additional charge per ballot style as required and charge is established per level of modification needed for programmed ballot change request;

(B) A $10.00 recording fee for English and Spanish Audio Files for each Contest, or Office, or Proposition questions;

(C) A $10.00 recording fee for English and Spanish Audio Files for each Contest, or Office, or Proposition answers;

(D) Cost of creating election media, such as, but not limited to Personal Electronic Ballot (PEB) cartridges, compact flash cards, labels, bags, keys, etc.; and

(E) The amount of $150.00 leasing fee for each iVotronic

(F) The amount of $150.00 leasing fee for each ADA iVotronic;

(G) Delivery and Pick-up Fee charge based on the price of renting commercial truck(s) and fuel;

(H) A Charge of $17.50 for each CD requested for mail-in ballot voter list(s).

EXHIBIT _____

Section 6.02 Early Voting Electronic Poll Book:

(A) Database access at $100.00 per day;
(B) Laptop rental, insurance and delivery fee of $150.00 per location; includes bar code scanner;
(C) Dymo printer rental;
(D) Printer label fee of $.03per label (price subject to change);
(E) Creation of separate Username and Password for each polling location at $20.00 per location;

Section 6.03 The printing cost of poll book(s) as set by the Elections Department.

Section 6.04 Training for Judges/Clerks shall be at no cost to entity when scheduled at prescribed Election Department times. Should on-site, non-scheduled iVotronic training be required, a charge of $100.00 for two (2) trainers will be incurred.

Section 6.05 If optional supplies are requested by ENTITY, fees will be charged in accordance with third party vendors' invoices.

Section 6.06 As prescribed by the Election Code, Section 31.100(d), a ten percent (10%) administrative fee of the total amount of the estimated service contract shall be charged. This 10% estimated administrative fee shall be paid and returned with the signed contract.

Section 6.07 Full payment of balance due, including the 10% of the administrative fee, shall be made by THE ENTITY within 30 days after receiving a final, itemized invoice from ADMINISTRATOR after calculations are finalized. Final payment shall be made by check payable to the Hidalgo County Elections Administrator.

Notice. Except as may be otherwise specifically provided in this contract, all notices, demands, requests or communication required or permitted hereunder shall be in writing and shall either be (i)personally delivered against a written receipt, or (ii) sent by registered or certified mail, return receipt requested, postage prepaid and addressed to the parties at the addresses set forth below, or at such other addresses as may have been theretofore specified by written notice delivered in accordance herewith:

Yvonne Ramón
Hidalgo County Elections Administrator
PO Box 659
Edinburg, Texas 78540

Mario H. Salinas, Assistant Superintendent
P.O. Box Drawer 990
Edinburg, TX 78540

EXHIBIT _____

Section 6.08 Any balances, if any remain after the payment of all costs of election bills, shall be the property of the THE ENTITY and returned to it.

Article VII. LIABILITY

Section 7.01 IF ANY OF THE ELECTION EQUIPMENT IS LOST, STOLEN, DESTROYED, OR DAMAGED, THE CITY, SCHOOL DISTRICT OR ENTITY WHO LEASED THE EQUIPMENT IS LIABLE FOR THE DAMAGE AND AGREES TO PAY THE ADMINISTRATOR THE COST OF THE REPLACEMENT OR REPAIR OF THE ELECTION EQUIPMENT SO LOST, STOLEN, DESTROYED OR DAMAGED.

Article VIII. GENERAL PROVISIONS

Section 8.01 This Contract shall be construed under and in accordance with the laws of the State of Texas, and all obligations of the parties created hereunder are performable in Hidalgo County, Texas.

Section 8.02 In case any one or more of the provisions contained in this Contract shall for any reason be held to be invalid, illegal or unenforceable in any respect, such invalidity, illegality or unenforceability shall not affect any other provision thereof, and this Contract shall be construed as if such invalid, illegal or unenforceable provision had never been contained herein.

Section 8.03 This Contract constitutes the sole and only agreement of the parties hereto and supersedes any prior understanding or written or oral agreement between the parties respecting the written subject matter.

Section 8.04 No amendment, modification, or alteration of the term hereof shall be binding unless the same be in writing, dated subsequent to the date hereof and duly executed by the parties hereto.

EXHIBIT _____

SIGNED this _____ day of _____, 2010

ELECTION ADMINISTRATOR

BY: _____

YVONNE RAMÓN

BY: Edinburg Consolidated Independent School District
NAME OF LEASING ENTITY

BY: _____

PRINT: _____

TITLE: _____

ATTEST BY: _____

PRINT: _____

TITLE: _____

APPROVAL COUNTY OF HIDALGO:

BY: _____

RENE RAMIREZ
COUNTY JUDGE

ATTEST BY: _____

ARTURO GUAJARDO, JR.
COUNTY CLERK

APPROVED AS TO LEGAL FORM:

BY: _____

STEPHEN L. CRAIN
ATLAS & HALL L.L.P.,

EXHIBIT _____

2010 Hidalgo County Elections
Leasing Estimate Calculator

COPY

ELECTION: Edinburg ISD Place 1, 2, 3 & 5 **DATE: November 2, 2010**

		Price	Quantity	Total
6.01	Programming Services for iVotronic			
A	Base Charge: Ballot Programming	$150.00	1	$150.00
A	Additional Ballot Style(s)	$25.00	1	$25.00
A	Request Change on Programmed Ballot	$10.00	0	$0.00
B	Audio Files (Per Contest/Office/Proposition/Question File)	$10.00	4	$40.00
C	Audio Files (Per Candidate/Answer)	$10.00	16	$160.00
D	Election Media per Polling Location(s)	$100.00	21	$2,100.00
E	iVotronic Voting Machine(s)	$150.00	26	$3,900.00
F	ADA iVotronic Voting Machine(s)	$150.00	21	$3,150.00
G	Delivery/Pick-up Fee	$300.00	1	$300.00
H	**Voter Registration List(s) (CD Format) for Mail-In-Ballot(s) Request**	$17.50	1	$17.50
			Total iVotronic Programming Charges	$9,842.50

		Price	Quantity	Total
6.02	Early Voting Electronic Poll Book (VoteSafe)			
A	Voter Registration Database (Per Day)	$100.00	12	$1,200.00
B	Laptop Rental	$150.00	1	$150.00
C	Dymo Printer Rental	$4.35	12	$52.20
D	Printer Labels (per vote)	$0.03	46169	$1,385.07
E	Username/Password - Per Polling Location	$20.00	1	$20.00
			Total Electronic Poll Book Charges	$2,807.27

		Price	Quantity	Total
6.03	Poll Book			
	Printing of Poll Book(s)	$1,381.20	1	$1,381.20
			Total Poll Book Charges	$1,381.20

		Price	Quantity	Total
6.04	Training			
	iVotronic scheduled trainings (per person, per hour)	$0.00	1	$0.00
	On-site non-scheduled iVotronic training (2 Trainers)	$100.00		$0.00
			Total Training Charges	$0.00

		Price	Quantity	Total
6.05	Supplies			
	Provisional Bag(s)	$2.00	0	$0.00
	Small Ballot Box(es)	$5.00	0	$0.00
	Large Ballot Box(es)	$10.00	0	$0.00
	Seals (10 per Pack)	$1.79	0	$0.00
	Combination Forms (10 per Pack)	$2.00	0	$0.00
	Table Top Booth(s) (For Provisional Voting)	$2.00	0	$0.00
	Polling Location Map(s)	$17.00		$0.00
			Total Supplies Charges	$0.00

6.06	Subtotal	$14,030.97
	Administrative Fee (10%)	$1,403.10
	ESTIMATED GRAND TOTAL	$15,434.07

RECEIVED
AUG 03 2010
ASST. SUPT. FOR
DISTRICT
ADMINISTRATION

EXHIBIT_____

APPROVAL OF EDINBURG CISD CAMPUS CRIME STOPPERS

Superintendent's Recommendation

That the Board of Trustees approve the recommendation of the campus crime stoppers non-profit 501 (c) (3) organization.

Rationale

Campus Crime Stoppers is an organized group of student volunteers and a cross-section of members of the community. The campus crime stoppers program will enable the students and staff to take a proactive approach in combating crime in our district campuses and empowering the students to be active participants in determining the quality of educational environment in their campuses by reporting crimes anonymously by phone. The campus crime stoppers board/committee reviews crimes that have occurred within the school's jurisdiction and attempts to solve them by offering cash rewards as an incentive for information that solves the crime.

This item was requested by Juan J. Gonzalez, Chief of Police.

Budgetary Information

The funds to operate the program are generated by individual and corporate donations. In addition, the campus crime stoppers wills sponsor various fundraising events throughout the year.

TOTAL AWARD RECOMMENDATION: $1,800.00.

Account	Description	Appropriations	Encumbrance	Expenditure	Balance
Private Crime Stoppers Account	Edinburg CISD Campus Crime Stoppers	1,800.00	0.00	0.00	1,800.00
	TOTAL	**1,800.00**	**912,278.00**	**0.00**	**1,800.00**

Resource Personnel

Dr. René Gutiérrez
Sylvia D. Garcia
Rigoberto V. Abrego
Amaro Tijerina
Mario H. Salinas
Juan J. Gonzalez

Board Policy Reference

This is in accordance with the Board Policy CH, Purchasing Law Bidding Requirements.

Requested by: _____
Juan J. Gonzalez, Chief of Police

Approved by: _____
Mario Salinas, Asst. Supt. for District Administration

Within Budgetary Allocations: _____
Sylvia D. Garcia, Director of Finance

Approved by: _____
Rigoberto V. Abrego, Assist. Supt. for Finance/Operations

Recommended by: _____
Dr. René Gutiérrez, Superintendent of Schools

EXHIBIT X, PAGE(S) 1-6

BY-LAWS OF EDINBURG CISD CAMPUS CRIME STOPPERS, INC.

ARTICLE I: NAME AND LOCATION

The name of the corporation is Edinburg CISD Campus Crime Stoppers, Inc. hereinafter referred to as Edinburg CISD Campus Crime Stoppers, Inc. The principal office of Crime Stoppers, Inc. shall be located at Edinburg CISD Police Department, located at 1313 E. Schunior but meetings of the Director may be held at such places within the State of Texas as may be designated by the Board of Directors. Edinburg CISD Campus Crime Stoppers will deal with only incidents that occur within property that is owned, leased or rented by the Edinburg CISD.

ARTICLE 2: MEMBERS

The members of the Board of Directors of Crime Stoppers, Inc. shall constitute all of the members of the nonprofit organization.

ARTICLE 3: BOARD OF DIRECTORS

Section 1: ***Composition***: In accordance with the Articles of Incorporation, the number of directors comprising the board of directors shall be not less that "Five" no more than "Ten" and no such member shall receive any compensation for serving the board.

Section 2: ***Appointment***: The appointment to the board of directors shall be made by the CISD Campus Crime Stoppers coordinator(s) and the Lieutenant of Police Operations.

Section 3: ***Term of Office***: A term of office shall normally begin in May and shall normally be for one year. The coordinator may recommend to the Lieutenant of Police Operations that an officer be re-appointed for another (1) one year term if the coordinators and Lieutenant of Police Operations are of the option that such appointment is necessary and appropriate.

Section 4: ***Removal***: Any Director may be removed, with or without cause, by two-thirds vote by ballot, at a regular or special meeting of the Board.

Section 5: ***Enumerated Powers***: In managing the affairs of Edinburg CISD Crime Stoppers, Inc. the Board shall specifically have, but not limited to, the power to:

A: Adopt standing rules. (With the approval of Edinburg CISD Campus Crime Stoppers)

B: Employ Individuals

C: Procure and maintain liability insurance to protect its members in the performance of their duties, and hazard insurance to protect Crime Stoppers, Inc. property.

D: Procure and maintain bonds for persons having custody of funds.

E: Authorize disbursement of funds.

ARTICLE 4: MEETINGS OF DIRECTORS

Section 1: ***Regular Meetings***: The Board of Directors shall hold no less than two (2) regular meetings per month, during the school year calendar term. The location for all the meetings shall be determined by the board of directors and the Edinburg CISD Crime Stoppers. The data and time of meetings may be changed by the President by giving a twenty-four hour (24) hour notice.

EXHIBIT X

Section 2: ***Special Meetings***: Special Meetings in addition to regular meetings; of the board of directors may be called by the coordinator or President (with the coordinators approval). Notice of the special meeting shall be given to all board members.

Section 3: ***Quorum***: A quorum shall consist of the minimum of the total number of members of the board of directors.

ARTICLE 5: OFFICERS AND DUTIES

Section 1: ***Officers***: The officers of Edinburg CISD Campus Crime Stoppers, Inc shall include but not limited to a President, Secretary/Treasurer. The officers shall be elected by the board, subject to approval by the crime stopper coordinator and the Lieutenant of Police Operations.

Section 2: ***Term***: A term of office shall be for one year and shall begin in May and continue until the following May.

Section 3: ***Vacancies***: A vacancy shall be filled by the board of director in good standing in Edinburg CISD Campus Crime Stoppers.

Section 4: ***Duties and Powers***: The officers shall perform the duties and exercise the powers prescribed by the Articles of Incorporation, and these BY-Laws. The coordinator shall serve in an advisory capacity to the board. These duties and powers shall include but not be limited to the following:

A: The Coordinator:

(1). be a police officer of the Edinburg CISD Police Department

(2). Serve in a supervisory, advisory, directional and information capacity and carry other duties as herein prescribed by these By-Laws.

(3). be responsible for keeping records, preparation and delivery of quarterly financial reports.

B: The President:

(1). Be the Principal Officer of the Edinburg CISD Campus Crime Stoppers

(2). Preside at all the meetings of the board of directors and executive board.

(3). Appoint standing committee chairperson and members create special committees thereof as the need arises.

(4). be an ex-officer member of every committee

C: The Secretary:

(1). Record all proceeding of all meetings of the Board of Directors and any meeting held.

(2). Provide each director with a copy of minutes from the past meetings.

(3). Assume such duties as may be assigned by the president and assume duties of the president in the absence of all higher officers.

(4). Make financial report at each meeting, and make sure the secretary has a copy for the minutes.

ARTICLE 6: COMMITTEES

Section 1: ***Standing Committees***: There shall be standing committees to deal with the following:

(A) Fundraising (chaired by the President)

(B) Publicity (Chaired by the Secretary)

EXHIBIT X-2

Section 2: *Special Committees*: Special committees may be created by the President. The chairperson shall be a member of the board of directors, but additional members not needed.

ARTICLE 7: HANDLING OF INFORMATION

Confidentiality: The directors of Edinburg CISD Campus Crime Stoppers shall not be given information as to the identity of the victim, perpetrator, or informant. At no time will any director of Edinburg CISD Campus Crime Stoppers become involved in an investigatory capacity on any case.

ARTICLE 8: CONTRIBUTIONS AND FUNDRAISING

Section 1: *Contributions*: Any contribution, requests of gifts made to the Edinburg CISD Crime Stoppers shall be brought to attention of the coordinator(s) and president of the Edinburg CISD Campus Crime Stoppers to ensure that no violation of the law occurs or that acceptance of such contribution, request or gifts are in conflict with rules/laws that govern the status of Edinburg CISD Campus Crime Stoppers. Once it is determined that the contributions, requested or gift may be accepted it shall be collected or deposited only in such a manner designed by Edinburg CISD Campus Crime Stoppers.

Section 2: *Fundraising*: Prior to initiating any fundraising campaign, Edinburg CISD campus Crime Stoppers shall first submit a description of such proposed fundraising campaign to the coordinators, who in turn shall approve, denied with or without cause.

ARTICLE 9: CONTRACTS AND DEBTS

Contracts and Debts: All contracts and evidence of debt may be executed only as directed by the board of directors with the approval of the coordinators and Edinburg CISD Campus Crime Stoppers.

ARTICLE 10: FINANCIAL EXAMINATION

A quarterly (based on calendar year) financial report shall be forwarded to the Treasurer/Secretary of the Edinburg CISD Campus Crime Stoppers, no later than the 5th day of every month following the end of each quarter. The financial report shall include all information required on a form prescribed by the coordinator of Edinburg CISD Campus Crime Stoppers. All business records, including but not limited to bank statements, cancelled checks, deposit slips and invoices will be available for inspection by Edinburg CISD Campus Crime Stoppers or its independent auditor.

ARTICLE 11: PARLIAMENTARY AUTHORITY

Robert's Rule of Order, newly revised, shall be primary authority for all matter of procedures.

ARTICLE 12: MEETING PROCEDURE

Meeting Procures:

The following procedures will be followed at all meetings:

1. Call to Order
2. Roll Call of Directors

EXHIBIT X-3

3. Welcome and Recognition of guests
4. Secretary reads minutes, discussion and correction and voter approval
5. Committee Reports
6. Old Business
7. New Business
8. Reports
9. Adjournment of Meeting

ARTICLE 13: AMENDMENTS

These By-Laws may be amended by two-thirds (2/3) vote of the board of directors present at any regular meeting or special meeting, provided that the amendment has been submitted to the board in writing at least ten (10) days prior thereto. All amendments must be approved by Edinburg CISD Campus Crime Stoppers, and the Lieutenant of Police Operations.

ARTICLE 14: STANDING RULES

The standing rules attached hereto and incorporated for all purposes may be adopted and/or suspended by a simple majority vote or amended or rescinded by a majority of the members, present at any meeting. Any action must be approved by Edinburg CISD Campus Crime Stoppers and the Lieutenant of Police Operations

ARTICLE 15: PROCEDURES

Upon approval, of Edinburg CISD Campus Crime Stoppers procedures and By-laws standing rules shall be in full force and effect. The following hereby certify that the foregoing By-Laws and standing rules were adopted by the board of directors of Edinburg CISD Campus Crime Stoppers.
On the _____day of _____, 2010

_____ Secretary / Treasurer

_____ President

EXHIBIT X-4

CAMPUS CRIME STOPPERS
OPERATIONAL PROCEDURES

1. Campus crime stoppers is an organized group of student volunteers representing of a cross section of the campus. The campus crime stoppers board committee reviews crimes that have occurred within the school's jurisdiction and attempts to solve them by offering cash rewards as an incentive for information that solves the crime. Campus crime stoppers will also offer a method for anonymity as described in these procedures. At no time will a student board member investigate a crime or attempt to apprehend someone who is committing a crime.
2. The forms and instructions for the procedure of reporting offenses by students/facility is distributed by campus crime stoppers. They are also available from the sponsor coordinator and the associate principals.
3. The school offense report will include but is not limited to the following:
   a. Items stolen or damaged
   b. Value
   c. Date of Crime
   d. Time of Crime
   e. Location of Crime
   f. Possible Suspects
   g. Notification of the offense to the police or not

   The campus offense report may be returned to any administrator or to the sponsor coordinator.
4. The sponsor coordinator reads through the reports and make copies for the campus crime stoppers program to review if there are no leads in the case. If the information received is a felony crime then the School Resource Officer will forward the information to the campus crime stoppers coordinator in accordance with their procedures. If the felony case is solved on the information received, the campus crime stoppers program will make any reward payment.
5. The campus crime stoppers program reviews the reports and evaluates each crime according to its seriousness. Rewards are offered for information that leads to the offense being solved. Offenses are categorized into three general areas with rewards of up to certain denominations determined according to the classification of the offense. Offenses are classified as follows:
   a. Minor up to $10.00
   b. Petty up to $50.00
   c. Major up to $125.00
6. The victim of a crime has the right to report the crime to the school, the police, or both. Any crime reported only to the school is under jurisdiction of that school, only. The school district's policies and procedures for investigation and subsequent discipline of the perpetrator will be followed. Offenses reported to the school only should have occurred at the school only.

   Crimes reported to the police will fall under police jurisdiction and will follow the policies and procedures of the police department. Cases that occur off campus but are reported to one of our police officers will not be considered by the campus crime stoppers program unless there exists a substantial possibility that a student or students from the school were involved in the case as suspects. Information received by the campus crime stoppers program pertaining to a felony crime will immediately be forwarded to the community crime stoppers program.
7. Students with information who would like to report information and remain anonymous may do so by calling the campus crime stoppers program at (TIP LINE).
8. Students who desire to remain anonymous are given a code number by the campus crime stoppers program. There will be no questions asked about the identity of the person who calls the campus crime stoppers program. The person with information should always use the code number for identification purposes when contacting the campus crime stoppers program to make arrangements for the payment of rewards.
9. Students with information who do not mind that their identity is known, should contact any administrator or the School Resource Officer.
10. After the crime is reported and the jurisdiction has been determined and case investigated without being solved, the sponsor coordinator presents the case to the campus crime stoppers board. The board reviews the offenses and publicizes the offenses and the rewards in the daily announcements, on a special bulletin board and periodically over the school PA system. Major offenses will be publicized more often that petty or minor offenses. Sponsors must approve all announcements. The crime will be posted and marked solved or unsolved in the advertisement.
11. After the crime is solved, the crime report will be returned to the campus crime stoppers program to be reviewed again for consideration of the amount of the reward to be paid if required by the caller.
12. Rewards to be paid to anonymous callers will only be paid by the sponsor/coordinator through a pre arranged

EXHIBIT X-5

method with the caller. Other types of rewards can be discretely be paid through other methods, or directly paid by the School Resource Officer.

13. At no time will any student board member of the campus crime stoppers program investigate any case.

EXHIBIT X-6

APPROVAL OF THE 2010-2011 SALARY SCHEDULE FOR CLASSROOM TEACHERS, LIBRARIANS AND NURSES, INCLUDING THE PLACEMENT OF CURRENT STEP 23+ CLASSROOM TEACHER ON SAME SCALE

Superintendent's Recommendation:

That the ECISD Board of Trustees approve the 2010-2011 salary schedule for classroom teachers, librarians and nurses, including the placement of current step 23+ classroom teacher on same scale.

Rationale:

To maintain equity in the salary schedule for classroom teachers, librarians, and nurses.

Paperwork Impact:

n/a

Budgetary Information:

Costs: approximately $54,000

Acct # : All salary accounts as applicable **2010-2011 BUDGET**

Appropriation	Encumbrance	Expenditure	Balance

Resource Personnel:

Dr. René Gutiérrez
Mr. Rigoberto V. Abrego
Mr. Jose A. Vasquez
Ms. Margarita Oyervides
Mr. Robert Vina, Jr.

Board Policy Reference and Compliance:

This item is in accordance with Board Policy DEA (Legal/Local) Compensation and Benefits: Leaves and Absences.

Prepared by: Robert Vina, Jr., Coord. of Personnel & Legal Issues

Approved by: Jose A. Vasquez, Director of Personnel

Within Budgetary Allocation: Sylvia D. Garcia, Director of Finance

Approved by: Rigoberto V. Abrego, Asst. Supt. for Finance & Operations

Recommended by: Dr. René Gutiérrez, Superintendent of Schools

09-07-10A07:55 RCVD

EXHIBIT Y, PAGE (S) 1-2

Hiring Schedule for Classroom
Teachers, Librarians, and Nurses (RN)

Yrs. Exp	10-11 w/bachelor's	10-11 w/master's	DFFNCE IN STEPS
0	42140	43140	
1	42540	43540	400
2	42940	43940	400
3	43340	44340	400
4	43740	44740	400
5	44240	45240	500
6	44740	45740	500
7	45940	46940	1200
8	47090	48090	1150
9	48180	49180	1090
10	49210	50210	1030
11	50180	51180	970
12	51100	52100	920
13	51980	52980	880
14	52790	53790	810
15	53570	54570	780
16	54300	55300	730
17	55000	56000	700
18	55650	56650	650
19	56270	57270	620
20	56860	57860	590
21	57410	58410	550
22	58258	59258	848
23+	59106	60106	848

EXHIBIT Y

2010-2011
School Year

Hiring Schedule for Classroom Teachers, Librarians, and Nurses (RN)

Yrs. Exp	09-10 w/bachelor's	10-11 w/bachelor's	09-10 w/master's	10-11 w/master's	DFFNCE IN STEPS	Total increase teachers will receive
0	41540	42140	42540	43140		600
1	41940	42540	42940	43540	400	1000
2	42340	42940	43340	43940	400	1000
3	42740	43340	43740	44340	400	1000
4	43140	43740	44140	44740	400	1000
5	43640	44240	44640	45240	500	1100
6	44140	44740	45140	45740	500	1100
7	45340	45940	46340	46940	1200	1800
8	46490	47090	47490	48090	1150	1750
9	47580	48180	48580	49180	1090	1690
10	48610	49210	49610	50210	1030	1630
11	49580	50180	50580	51180	970	1570
12	50500	51100	51500	52100	920	1520
13	51380	51980	52380	52980	880	1480
14	52190	52790	53190	53790	810	1410
15	52970	53570	53970	54570	780	1380
16	53700	54300	54700	55300	730	1330
17	54400	55000	55400	56000	700	1300
18	55050	55650	56050	56650	650	1250
19	55670	56270	56670	57270	620	1220
20	56260	56860	57260	57860	590	1190
21	56810	57410	57810	58410	550	1150
22	57658	58258	58658	59258	848	1448
23+	58506	59106	59506	60106	848	1448

EXHIBIT Y-2

2010-2011 School Year

APPROVAL OF MAINTENANCE CONTRACT WITH SYSTEMS DESIGN PURCHASED FROM DIR CONTRACT # DIR-SDD-981 FOR 2010 – 2011 SCHOOL YEAR

Superintendent's Recommendation:

That the Board of Trustees approves the recommendation to accept the lowest Department of Information Resources quote for the maintenance contract with Systems Design for 2010 – 2011 School Year to be used by Child Nutrition Department.

Rationale:

Technology equipment purchased through the Department of Information Resources meet all bidding requirements. Systems Design has been awarded a contract that is available to the District. We currently have all their software and equipment at all the campuses and our office which ensures proper counting and claiming of meals. All equipment, software, service and support are covered under this contract. This is the DIR Contract # DIR-SDD-981.

Paperwork Impact:

None

Budgetary Information:

The total contract price is $19,621.09.

Account Number	Appropriation	Encumbrance	Expenditure	Balance
101-35-6249-00-938-199000	$60,000	$0.00	$0.00	$60,000

Resource Personnel:

Dr. Rene Gutiérrez
Mary De Luna
Rigoberto V. Abrego
Mario Salinas
Sylvia García
Amaro Tijerina

Board Policy Reference:

This is in accordance with Board Policy CH, Purchasing Law Bidding Requirements.

Prepared by: _____
Mary De Luna, Director of Child Nutrition Program

Within Budgetary Allocation: _____
Sylvia García, Director of Finance

Approved by: _____
Mario Salinas, Asst. Supt. for District Administration

Approved by: _____
Rigoberto V. Abrego, Asst. Supt. for Finance/Operations

Superintendent of Schools: _____
Dr. Rene Gutiérrez

EXHIBIT Z ; PAGE(S) 1

Systems Design
FOOD & NUTRITION MANAGEMENT SYSTEMS

Invoice

Date	Invoice #
10/1/2010	10-0656

Bill To
Edinburg ISD Food Services 1313 E. Schunior Edinburg, Tx 78540

EDINBURG C.I.S.D.
CHILD NUTRITION DEPARTMENT
RECEIVED

P.O. No.	Terms	Project
DIR-SDD-981	Due 10-01-2010	

Quantity	Description	Rate	Amount
	Maintenance Contract - Period 10/01/2010 thru 09/30/2011:		
	Software Support Fee - (15% of $57930)	8,689.50	8,689.50
1	Dell 2850/2950 Fault Tolerant Server	750.00	750.00
	Unix Support on Multiprocessor	869.25	869.25
44	Adds LFC Terminals	75.00	3,300.00
11	SD Ethernet Terminals	90.00	990.00
4	SD Ethernet Terminals (base only)	70.00	280.00
4	15" Flat Screen Monitor	15.00	60.00
24	Cherry Student Entry 10-key pads	30.00	720.00
31	Systech Portservers (4-port)	75.00	2,325.00
1	Systech PortServer (8-port)	100.00	100.00
1	HP P2015dn Laser Printer	75.00	75.00
1	DLink Print Server	8.00	8.00
~~4~~	~~Okidata 320 Turbo (parallel)~~	~~100.00~~	~~400.00~~
4	Lantronix Print Servers	30.00	120.00
	Travel & Shipping Adjustment	934.34	934.34
	Thank you for your business.	**Total**	$19,621.09

P.O. Box 271380 Corpus Christi, Texas 78427-1380 Phone: 1.361.851.2401 Fax: 1.361.851.2048

EXHIBIT Z

APPROVAL OF CHANGE DIRECTIVE #7 FOR BREWSTER SCHOOL PHASE I CAFETERIA AND SITE IMPROVEMENTS

Superintendent's Recommendation

That the Board of Trustees approves the Change Directive #7for Brewster School Phase I Cafeteria and Site Improvements as prepared by Negrete & Kolar, Architects.

Rationale

Brewster School Phase I Cafeteria and Site Improvements include a prorate share of Board funds for work, parking, utilities, and the waste water treatment plant.

The recommendation is to delete the waste water treatment plant and add the diesel tank drive and $50,000 Landscaping Allowance as shown on the attached Change Directive and Change Directive Log.

The Facilities Committee has reviewed this item and recommends Board approval.

Budgetary Information

Account Number	Appropriation	Encumbrance	Expenditure	Balance
617-81-6629-00-102-199	$285,834.00	$ 0.00	$ 0.00	$285,834.00

Resource Personnel

Facilities Committee
Dr. Rene Gutiérrez
Mario Salinas
Rigoberto Abrego
Sylvia Garcia
Robert Estrada

Board Policy Reference

This is in accordance with Board Policy BAA (Legal) Board Powers and Duties.

Prepared by: Robert Estrada, District Architect

Approved by: Mario Salinas, Asst. Superintendent for District Administration

Within Budgetary Allocations: Sylvia Garcia, Director of Finance

Approved by: Rigoberto Abrego, Asst. Superintendent for Finance

Recommended by: Dr. Rene Gutierrez, Superintendent of Schools

Exhibit AA **, Pages** 1-3

CONSTRUCTION CHANGE DIRECTIVE

OWNER: [ ] CONSULTANT: [ ]
ARCHITECT: [ ] FIELD: [ ]
CONTRACTOR: [ ] OTHER: [ ]

PROJECT	**Brewster Cafeteria**	CONSTRUCTION CHANGE DIRECTIVE NO:	**07**
OWNER:	**Edinburg CISD**	DATE OF ISSUANCE:	**02 September 2010**
TO: (Contractor)	**Enriquez Enterprises, Inc.** **3025 South Sugar Road** **Edinburg, Texas 78539**	ARCHITECT:	**Negrete & Kolar Architects** **204 East Stubbs** **Edinburg, Texas 78539**

CONTRACT FOR: **Construction for Brewster Cafeteria**

CONTRACT DATED: **24 March 2009** ARCHITECT'S PROJECT NO: **2801**

You are herby directed to make the following change(s) in this Contract:

Description
Delete remainder of Waste Water Treatment Plant balance from scope of work.
Attachments
PR 18 pricing dated 03/31/09.

Description:
Add landscape/sprinkler allowance.
Attachments:
As based on Addendum 02: L1.01, L1.02, L1.03, L2.01, L2.02, L2.03

Description:
Install diesel tank fueling station as shown in Proposal Request AD1-C1 and AD1-C2 dated 01/27/10.
Attachments:
PR 16 pricing dated 03/03/09.

PROPOSED ADJUSTMENTS

1. The proposed basis of adjustment to the Contract Sum or Guaranteed Maximum price is:
   - ☐ Lump Sum increase of $_____
   - ☐ Unit Price of $_____ per _____
   - ☐ As provided in Subparagraph 7.3.6 of AIA Document A201, 1987 edition.
   - ■ As follows:

Contingency Allowance	$ 745.75
WWTP	+ $246,130.00
Landscape/Sprinkler	- $ 50,000.00
Diesel Tank Drive	- $ 15,278.00
Contingency Balance	**$181,597.75**

PROPOSED ADJUSTMENTS

1. The proposed basis of adjustment to the Contract Sum or Guaranteed Maximum price is:
   - ☐ Lump Sum increase of $_____
   - ☐ Unit Price of $_____ per _____
   - ☐ As provided in Subparagraph 7.3.6 of AIA Document A201, 1987 edition.
   - ■ As follows:

Contingency Allowance	$13,691.00
LXEN	- $ 676.00
NEMA	- $ 394.25
Slab/landscape	- $ 614.00
60amp breaker	- $ 966.00
Condensate	- $ 700.00
Old bleacher area	- $ 9,595.00
Contingency Balance	**$ 745.75**

2. The Contract Time is proposed to remain unchanged. The proposed adjustment, if any, is an increase of 0 (zero) days.

RECOMMEND BY:	AUTHORIZED BY:	ACCEPTED BY:
Negrete & Kolar Architects	Edinburg CISD	Enriquez Enterprises
Architect	**Owner**	**Contractor**
204 East Stubbs	411 North 8th Street	P. O. Box 2998
Edinburg, Texas 78539	Edinburg, Texas 78539	Edinburg, Texas 78539
Address	**Address**	**Address**
BY: David Negrete, AIA	BY: Dr. Rene Gutierrez, Superintendent	BY: Gilbert Enriquez, VP

EXHIBIT AA

Brewster Phase I Change Directive Log

No.	Description	Cost	Balance
	Contract Contingency		**$ 50,000.00**
1	Add gate valve	$ 850.00	**$ 49,150.00**
2	Add HVAC Controls	$ 38,000.00	**$ 11,150.00**
3	Value Engineering-Credit	$ (16,405.00)	**$ 27,555.00**
4	Relocate Waste Water Treatment Plant	$ 9,663.00	**$ 17,892.00**
5	Add Logo,Rough-in Conduit for Cameras	$ 4,201.00	**$ 13,691.00**
6	Misc. items,old bleacher pad	$ 12,945.25	**$ 745.75**
7	Delete Waste Water Treatment Plant-Credit	$ (246,000.00)	**$ 246,745.75**
	Diesel Tank Drive& Pad	$ 15,278.00	**$ 231,467.75**
	Landscaping Allowance (Phase II)	$ 50,000.00	**$ 181,467.75**

Brewster Phase II Change Directive Log

No.	Description	Cost	Balance
	Owners Contract Contingency		**$ 25,000.00**
1	Electrical upgrades/teachers cabinets	$ 22,862.00	**$ 2,138.00**
2	add sink in prep room	$ 1,410.00	**$ 728.00**

Brewster Phase II Change Directive Log

No.	Description	Cost	Balance
	Contractors Contingency		**$ 25,000.00**
1	Revise Wood Doors-Credit	$ (1,204.00)	**$ 26,204.00**
2	Delete Fire Pull Stations-Credit	$ (993.00)	**$ 27,197.00**
3	Revise Sound System in Gym	$ 821.00	**$ 26,376.00**
4	Modify Marker/Tack Boards-Credit	$ (1,814.00)	**$ 28,190.00**
5	Add Sound Proofing	$ 2,750.00	**$ 25,440.00**
6	Additional Canopy	$ 1,377.00	**$ 24,063.00**

EXHIBIT AA-2

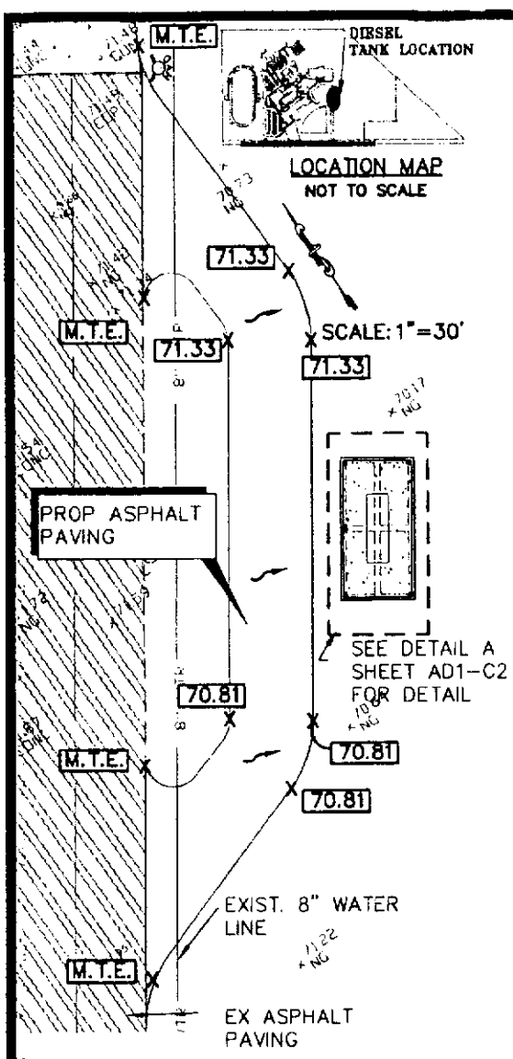

GRADING LAYOUT

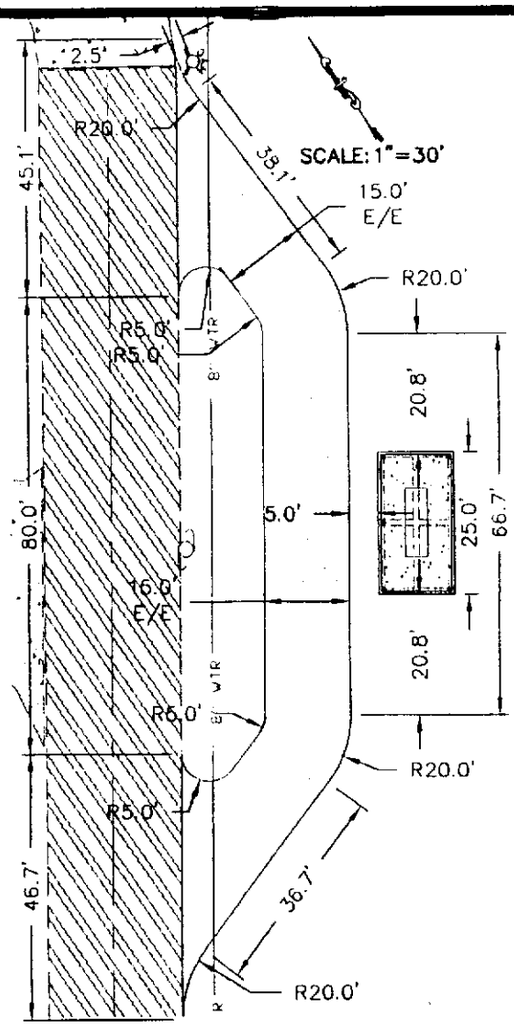

DIMENSION LAYOUT

LEGEND	
	-POWER POLE
-8"WTR-	-8"WATER LINE
	-FIRE HYDRANT
x xxx	-EXIST NATURAL GROUND
M.T.E.	-MATCH TO EXISTING

RIO DELTA ENGINEERING
FIRM REGISTRATION No. TX-7628
921 S. 10TH AVENUE
EDINBURG TEXAS 78539
(TEL) 956-380-5152 (FAX) 956-380-5083

PROJ. NO. ENG 09 016

STATE OF TEXAS
GILBERT J. GUERRA
90156
LICENSED PROFESSIONAL ENGINEER
1/29/10

E.C.I.S.D.
BREWSTER MIDDLE SCHOOL
GYMNASIUM & CLASSROOM BLDG.
F.M. 1017 Edinburg, Texas 78541

NEGRETE & KOLAR ARCHITECTS
204 East Stubbs Street
Edinburg Texas, 78539
Tel: 956.386.0611
Fax: 956.386.0611
1601 East Seventh Street
Suite Two Hundred
Austin Texas, 78702
Tel: 512.474.6526
Fax: 512.474.6761

ADDENDUM:	1
SHEET:	1
DATE:	01 27.10
DRAWN BY: A.R.	

AD1- C1

EXHIBIT AA-3

APPROVAL OF CHANGE ORDER #1 FOR GROUP C – FINE ARTS FACILITIES

Superintendent's Recommendation

That the Board of Trustees approves the Change Order #1 for Group C Fine Arts Facilities Project as prepared by Broaddus & Associates.

Rationale

Broaddus and Associates has reviewed the proposed change request submitted by Construction Manager at Risk (CMR) SpawGlass Contractors, Inc. for a reduction of **$53,630.34** as a credit to the GMP for the Owner Controlled Insurance Program (OCIP). The original Guaranteed Maximum Price (GMP) of $18,501,256 will be reduced by a total of $53,630.00. The revised GMP will be $18,447,626.

Original GMP	$18,501,256.00
Change Order #1 – OCIP Contribution/Time	$ (53,630.00)
Construction Contingency Balance	**$18,447,626.00**

Broaddus and Associates have also reviewed the proposed change request for additional construction days caused by rain delays. The original date established for Substantial Completion was September 14, 2010. The CMR has reported a total of 38 acceptable rain day delays. The revised Substantial Completion date will be November 6, 2010. There will be no additional cost to the contract price as a result of the change in Substantial Completion date.

Based on our review, Broaddus and Associates finds the proposed costs reduction and the additional construction delay days to be fair and reasonable and respectfully requests that the Facilities Committee consider recommending approval to the Board of Trustees of this credit to the GMP.

The Facilities Committee has reviewed this item and recommended Board approval.

Budgetary Information

Account Number	Appropriation	Encumbrance	Expenditure	Balance
623-81-6629-00-001-099	$ 248,311.00	$0.00	$0.00	$ 248,311.00
623-81-6629-00-002-099	$1,701,569.00	$0.00	$0.00	$1,701,569.00
623-81-6629-00-003-099	$1,546,619.00	$0.00	$0.00	$1,546,619.00

Resource Personnel

Facilities Committee	Dr. Rene Gutiérrez
Mario Salinas	Rigoberto Abrego
Sylvia Garcia	Robert Estrada

Board Policy Reference

This is in accordance with Board Policy BAA (Legal) Board Powers and Duties.

Prepared by: Robert Estrada, District Architect

Approved by: Mario Salinas, Asst. Superintendent for District Administration

Within Budgetary Allocations: Sylvia Garcia, Director of Finance

Approved by: Rigoberto Abrego, Asst. Superintendent for Finance

Recommended by: Dr. Rene Gutierrez, Superintendent of Schools

Exhibit BB **, Pages** 1-8

BROADDUS & ASSOCIATES
INNOVATIVE PROJECT MANAGEMENT AND CONSULTING

08/31/2010

Dr. Rene Gutierrez, Ed.D.
Superintendent of Schools
Edinburg Consolidated Independent School District
411 N. 8th St.
Edinburg, TX 78541

Re: ECISD 2008 Bond Program
New Fine Arts Facilities – ENHS, JEHS, & EHS
Change Order # 01

Dear Mr. Gutierrez:

Broaddus & Associates has reviewed the proposed change request submitted by Construction Manager-at-Risk (CMR) SpawGlass Contractors, Inc. for a reduction of $53,630.34 as a credit to the GMP for the Owner Controlled Insurance Program (OCIP). The original Guaranteed Maximum Price (GMP) of $18,501,256 will be reduced by a total of $53,630.00. The revised GMP will be $18,447,626.

Description	Amount
Original GMP	$18,501,256
Change Order #01 – OCIP Contribution/Time	(53,630)
Construction Contingency Balance	**$18,447,626**

Broaddus & Associates has also reviewed the proposed change request for additional construction days caused by rain delays. The original date established for Substantial Completion was September 14, 2010. The CMR has reported a total of 38 acceptable rain day delays. The revised Substantial Completion date will be November 06, 2010. There will be no additional cost to the contract price as a result of the change in substantial completion date.

Based on our review, Broaddus & Associates finds the proposed costs reduction and the additional construction delay days to be fair and reasonable and respectfully requests that the Facility Committee consider recommending approval to the Board of Trustees of this credit to the GMP.

Please contact me if you have any questions or if you require any additional information.

Sincerely,

Rolando L. Garcia, FAIA
Senior Project Manager, LEED AP

FN: 100907 ECISD FA Change Order 01 Recom Let.docx

1100 E. Jasmine Ave. ◊ McAllen, Texas 78501 ◊ Phone: (956) 688-2307 ◊ Fax: (956) 688-2315
1301 S. Capital of Texas Highway, Suite A-302 ◊ Austin, Texas 78746 ◊ Phone: (512) 329-8822 ◊ Fax: (512) 329-8242

EXHIBIT BB

Change Order (For CM/R, D/B and Performance Contracts)

Project Name: ECISD 2008 Bond Fine Arts Facilities Change Order No.: 1

Project No.: 09003 Date: August 31, 2010

Location: JEHS, ENHS, EHS

This Change Order Impacts Phase II Services

To: SpawGlass Contractors, Inc. , Contractor for the above project;
You are hereby authorized to make the following changes in the work under your contract:

C.P./F.O. No.	Description of Work	Cost	Time Extension
1	Adjust contract completion dates	0	38 days
	OCIP credit	($53,630.00)	0 days

It is agreed that the _____ cost XXXXX credit of **Fifty-three thousand, six hundred thirty dollars ($53,630.00)** and 38 days Time extension provided For in this Change Order, constitutes full compensation to the Contracting Firm (CM/R, D/B, Performance Contractor), whether direct, consequential or otherwise, in any wise incident to, or arising out of, or resulting directly from the work performed or modified by the Contracting Firm under this Change Order. The Contract completion date, including this time extension if any, is Original Notice To Proceed was granted September 29, 2009 with a 12-month duration until Substantial Completion. 38 rain days extends the Substantial Completion Date to November 6, 2010 for all buildings.

For the above changes the sum of; $53,630.00
will be: _____ added to, xxxx deducted from, the contract price.

Original Part II Services Amt. OR Contingency Allowance	($ 18,501,256.00)	**Accepted:**
Previous Additions	($ 0)	
Previous Deductions	($ 0)	By: _____
Net Bal. Part II Services Amount OR Contingency Allowance	($ 18,501,256)	SpawGlass Contractors, Inc.
This **ADDITION**	($ 0)	
This **DEDUCTION**	($ 53,630.00)	By: _____
Adjusted Part II Services Amount OR Contingency Allowance Balance	($ 18,447,626.00)	Broaddus & Associates By: _____
Summary of Other Services Total:		ERO Architects, Inc.
Part I Services Amount	($ 0)	By: _____
Part II Services Amount	($ 0)	E.C.I.S.D.
Total Adjusted Contract	($ **18,447,626.00**)	

BROADDUS & ASSOCIATES

EXHIBIT BB-2

SpawGlass

Dr. Grady Deaton
Broaddus & Associates
1100 East Jasmine Avenue, Suite 102
McAllen, TX 78501

August 9, 2010

Re: ECISD 2008 Bond Program
Performing Arts Facilities

Sub: Current Rain Days for ECISD Performing Arts Facilities

Dr. Deaton-

Please note that SpawGlass Contractors is requesting a formal contract time extension for the following documented dates as rain days for the ECISD Performing Arts Facilities totaling **38** working days.

October 26, 2009	Rain Day
October 27, 2009	Dewatering
October 28, 2009	Dewatering
October 29, 2009	Dewatering
October 30, 2009	Dewatering
November 30, 2009	Rain Day
December 1, 2009	Rain Day
December 2, 2009	Dewatering
December 3, 2009	Dewatering
December 4, 2009	Dewatering
December 5, 2009	Rain Day
December 11, 2009	Rain Day
December 16, 2009	Rain Day
December 17, 2009	Dewatering
December 17, 2009	Dewatering
January 1-31, 2010	NO Days reported
February 3, 2010	Rain
February 4, 2010	Rain
February 5, 2010	Dewatering
February 11, 2010	Rain
February 12, 2010	Rain
February 19, 2010	Rain
February 22, 2010	Dewatering
February 23, 2010	Rain
March 16, 2010	Rain
April 12, 2010	Rain
April 13, 2010	Rain
April 14, 2010	Rain
April 20, 2010	Rain
May 18, 2010	Rain
May 19, 2010	Dewatering
May 20, 2010	Dewatering
June 8, 2010	Rain
June 23, 2010	Rain (Hurricane Alex)
June 24, 2010	Rain (Hurricane Alex)
June 25, 2010	Dewatering (Hurricane Alex)

SpawGlass Contractors, Inc.
4909 E. Grimes Road, Harlingen, Texas 78550
Phone 956/412-9880 fax 956/412-35-81

EXHIBIT BB-3

- July 8, 2010 Rain
- July 18, 2010 Rain

Contractual Completion dates are as follows;
Substantial Completion - August 30, 2010
Final Completion – September 30, 2010

Revised Completion Dates accounting for current rain days are as follows;
Extended Substantial Completion – October 21, 2010
Extended Final Completion – November 21, 2010

If you require any additional information, please call.
Sincerely,

Steve E. Rodriguez

Steve E. Rodriguez, LEED AP
SpawGlass Contractors Inc.
(956) 535-2756

CC: File, Rene Capistran, Robert Bennett

SpawGlass Contractors, Inc.
4909 E. Grimes Road, Harlingen, Texas 78550
Phone 956/412-9880 fax 956/412-35-81

EXHIBIT BB-4

You replied on 8/31/2010 2:32 PM.
Attachments can contain viruses that may harm your computer. Attachments may not display correctly.

Grady Deaton

From: Steve Rodriguez [steve.rodriguez@spawglass.com] **Sent:** Tue 8/31/2010 2:06 PM
To: Rolando Garcia
Cc: 'Leala Smith'; Grady Deaton; Joe Rafac; rene.capistran@spawglass.com
Subject: ECISD Performing Arts - OCIP Credit
Attachments: OCIPCredit9-1-10.pdf(2MB)

Rolando, per the attached schedule for the OCIP credit, I feel comfortable with crediting the District $53,630.34 at this time. There will be a pending amount of $20,001.92 between Ras Masonry, Sechrist-hall & Texas Scenic that require further verification. Once these amounts are confirmed, we can include this remaining credit at the end of the job when we balance out the contingencies. The total credit for the OCIP should be $73, 632.26.

Thank you,

Steve Rodriguez, LEED AP

Project Manager

SpawGlass

956-383-3320 (job site)

956-412-9880 (office)

956-412-3581 (fax)

956-535-2756 (cell)

www.spawglass.com

EXHIBIT BB-5

SpawGlass

OCIP Contributions

Contractor	Reported Amount 4/28/10	Final Amount	Variance	Comments
All Pro Sound	$ 5,101.72	$ 1,475.00	$ 3,626.72	
CTO, Inc	$ 4,273.02	$ 2,910.00	$ 1,363.02	
D&F Industries	$ 9,646.39	$ 5,765.00	$ 3,881.39	
Fire Check of Texas	$ 5,787.07	$ 4,319.00	$ 1,468.07	
G&S Glass	$ 1,858.30	$ 2,484.00	$ (625.70)	
Harlingen Door Company	$ 1,032.44	$ 494.00	$ 538.44	
Intertech Flooring	$ -	$ 94.00	$ (94.00)	
Marek Brothers Systems	$ 1,518.51	$ 1,518.51	$ -	
McAllen Pest Control	$ 90.42	$	$ 90.42	Included with SpawGlass Self-perform
MF Site Construction	$ 25,101.04	$ 4,082.04	$ 21,019.00	
Palm City Paint	$ 4,448.90	$ 1,583.00	$ 2,865.90	
Premier Railing	$ 1,022.67	$ 1,596.00	$ (573.33)	
Ras Masonry	**$ 6,680.93**	**$ 6,680.93**	**$ -**	**Verify Contribution $13,860**
RGV Alliance	$ 2,086.83	$ 2,086.83	$ -	
Rio Grande Rebar	$ 243.84	$ -	$ 243.84	Included with SpawGlass Self-perform
Rob Pellitier	$ 3,639.07	$ 1,283.00	$ 2,356.07	
Sechrist-hall Company	**$ 3,480.76**	**$ 3,480.76**	**$ -**	**Verify Contribution $12,801**
Southern Steel Fabricators	$ 4,340.72	$ 4,340.72	$ -	
Specialty Supply Installation	$ 1,740.16	$ 1,740.16	$ -	
South Texas Woodmill	$ -	$ 109.00	$ (109.00)	
Texas Scenic Co.	**$ 3,710.39**	**$ 3,710.39**	**$ -**	**Verify Contribution $7,213**
Valley Garden Center	$ -	$ 773.00	$ (773.00)	
Victoria Air Conditioning	$ 6,121.46	$ 3,105.00	$ 3,016.46	
TOTAL CONTRIBUTION AMOUNT		**$ 53,630.34**		

EXHIBIT BB-6

Premium Contribution Amounts- Wrap Insurance - Edinburg CISD- Fine Arts

SpawGlass Construction

Econmedes High School Multi-Purpose Fine Arts; Edinburg High School Multi-Purpose Fine Arts; Edinburg North High School Multi-Purpose Fine Arts

[ ] Need Enrollment Forms & GL Rate Sheets

Contractor	Enrolled in Project	GL Rate Sheet Rec'd	Sales (s) / Payroll (p)	Contract/Bid Amount	Payroll Amount	GL Rate (Existing)	Contribution Amount based off Subs GL Rate Sheet as of 8/30/10	Reported 4/28/10
All Pro Sound, Inc.	Yes	Yes	p	722,214	193,386	7.6290	1,475	5,101.72
CTO, Inc.**	Yes	Yes	p	71,217	48,270	60.2890	2,910	4,273.02
D & F Industries, Inc. (Electrical)	Yes	YES	p	1,406,180	461,706	12.4860	5,765	9,646.39
D & F Industries, Inc. (HVAC)	Yes	Yes	p	1,783,449	214,000	30.0570	6,432	
Firecheck of Texas Inc.	Yes	Yes	p	153,162	52,000	83.0640	4,319	5,787.07
G & S Glass, LLC	Yes	Yes	s	414,984	n/a	5.9860	2,484	1,858.30
Harlingen Door Company	Yes	Yes	p	51,622	13,000	38.0000	494	1,032.44
HURFCO Industries Inc dba Hurricane Fence	Yes	Yes						
Intertech Flooring	Yes	Yes	s	207,921	n/a	0.454	94	0.00
Marek Brothers Systems Inc.	Yes	Yes	s	422,961	n/a	3.5902	1,519	1,518.51
McAllen Pest Control	Yes	Yes	s	7,117	n/a	12.7050	90	90.42
MF Site Construction	Yes	Yes	s	1,255,052	n/a	3.2500	4,079	25,101.04
Palm City Painting Inc.	Yes	Yes	p	194,700	95,700	16.5420	1,583	4,448.90
Premier Railing Solutions	Yes	Yes	p	141,939	43,518	36.6840	1,596	1,022.67
RAS Masonry LLC	Yes	Yes	p	1,484,651	693,000	20.0000	13,860	6,680.93
RGV Alliance Construction LLC	Yes	Yes	s	321,050	n/a	6.5000	2,087	2,086.83
Rio Grande Rebar Placing Inc.	Yes	Yes	s	48,000	n/a	3.4960	168	243.84
Rob Pelletier Construction Inc.	Yes	Yes	p	272,100	43,734	29.3440	1,283	3,639.07
Sechrist-Hall Company	Yes	Yes	p	562,865	207,000	61.8400	12,801	3,480.76
South Texas Woodmill, Inc.	Yes	Yes	p	96,318	19,000	5.7469	109	
Southern Steel Fabricators	Yes	Yes	s	1,226,191	n/a	3.5400	4,341	4,340.72
Specialty Supply Installation	Yes	Yes	s	184,809	n/a	9.4160	1,740	1,740.16
Texas Scenic Company Inc.	Yes	Yes	p	1,488,325	372,000	19.3900	7,213	3,710.39
Valley Garden Center Inc. dba: Southern Landscapes	Yes	Yes	p	142,720	60,000	12.8850	773	
Victoria Air Conditioning	Yes	Yes	p	1,763,600	420,000	7.3920	3,105	6,121.46

EXHIBIT BB-7

Premium Contribution Amounts- Wrap Insurance - Edinburg CISD- Fine Arts

SnowGlass Construction

Escamedes High School Multi-Purpose Fine Arts; Edinburg High School Multi Purpose Fine Arts; Edinburg North High School Multi-Purpose Fine Arts

Contractor	Enrolled in Project	Contract/ Addendum Rec'd	GL Rate Sheet Rec'd	Contract/Bid Amount	GL Rate (Existing)	Contribution Amount	%
All Pro Sound, Inc	Yes	Yes	Yes	$722,214.00	7.0640	$5,101.72	0.71%
CTG, Inc	Yes	Yes	Yes	$71,217.00	60.0000	$4,273.02	6.00%
D & E Industries, Inc	YES	YES	YES	$1,406,180.00	6.8600	$9,646.39	0.69%
Firecheck of Texas Inc	Yes	Yes	Yes	$153,162.00	37.7840	$5,787.07	
G & S Glass, LLC	Yes	YES	Yes	$414,984.00	4.4780	$1,858.30	0.45%
Harlingen Door Company	Yes	Yes	Yes	$51,622.00	20.0000	$1,032.44	2.00%
Intertech Flooring	Yes	Yes	NO	$207,921.00		$0.00	
Marek Brothers Systems Inc	Yes	YES	Yes	$422,961.00	3.5902	$1,518.51	0.36%
McAllen Pest Control	Yes	Yes	Yes	$7,117.00	12.7050	$90.42	1.27%
MF Site Construction	YES	Yes	Yes	$1,255,052.00	20.0000	$25,101.04	2.00%
Palm City Painting Inc	Yes	Yes	YES	$194,700.00	22.8500	$4,448.90	2.29%
Payless Plumbing	NO	NO	NO			$0.00	
Premier Railing Solutions	Yes	YES	Yes	$141,939.00	7.2050	$1,027.67	0.72%
RAS Masonry LLC	Yes	Yes	YES	$1,484,651.00	4.5000	$6,680.93	0.45%
RGV Alliance Construction	Yes	Yes	Yes	$321,050.00	6.5000	$2,086.83	0.65%
Rio Grande Rebar Placing Inc	Yes	Yes	Yes	$48,000.00	5.0800	$243.84	0.51%
Rob Pelletier Construction Inc	Yes	YES	Yes	$272,100.00	13.3740	$3,639.07	1.34%
Schrist Hall Company	Yes	Yes	Yes	$562,865.00	6.1840	$3,480.76	0.62%
Southern Steel Fabricators	Yes	Yes	Yes	$1,226,191.00	3.5400	$4,340.72	0.35%
Specialty Supply Installation	Yes	YES	Yes	$184,809.00	9.4160	$1,740.16	0.94%
Texas Scenic Company Inc	No (GL, WC & Auto Ins Certs Needed	Yes	Yes	$1,488,325.00	2.4930	$3,710.39	0.25%
Victoria Air Conditioning	Yes	YES	Yes	$1,763,600.00	3.4710	$6,121.46	0.35%
				$12,400,660.00		$91,924.53	

1475

EXHIBIT BB-8

APPROVAL OF REPAYMENT RESOLUTION 2011-02 IN THE AMOUNT OF $446,173 FROM THE GENERAL FUND FOR THE PURCHASE OF THE JUMBOTRON AT CATS STADIUM

Superintendent's Recommendation

That the Board of Trustees approve the Repayment Resolution 2011-02 in the amount of $446,173 from the General Fund for the purchase of the Jumbotron at Cats Stadium.

Rationale

The District will be purchasing a 192 lines by 336 columns, 23mm LED Color (4.4 Trillion color) 14' 10"H X 25' 9"W X 9"D Jumbotron at the cost of $296,173. Jumbotrons purchased through the BuyBoard contracts meet all of the Purchasing requirements. Daktronics was awarded a contract which is available to the district. Please see attached documentation. The District shall also look at the most economic option for the installation of the Jumbotron and the construction of the control room to better manage our funds at a maximum cost of $150,000.

The payments received by Educational Broadband Service Long-Term DE FACTO Lease Agreements by Edinburg Consolidated Independent School District and Nextel will be deposited to the General Fund fulfilling the Repayment Resolution 2011-02.

Budgetary Information

No long term impact to General Fund since the internal service fund will repay the General Fund when the funds are available. The internal service fund will work in the same matter as food service and print shop funds where revenues are accounted separately to increase the level of transparency and accounting accuracy.

Resource Personnel

Dr. René Gutiérrez	Maria L. Guerra	Joe Filoteo
Rigoberto V. Abrego	Mario Salinas	Martin Torres
Sylvia D. Garcia	Eddie Moreno	Leo Reyes

Board Policy Reference

This is in accordance with Board Policy, BAA Board Legal Status Powers and Duties.

Approved by: _____
Rigoberto V. Abrego Asst. Supt. for Finance/Operations

Within Budgetary Allocations: _____
Sylvia D. Garcia, Director for Finance

Recommended by: _____
Dr. René Gutiérrez, Superintendent of Schools

EXHIBIT CC PAGE(S) 1-15

EDINBURG CONSOLIDATED INDEPENDENT SCHOOL DISTRICT
ANALYSIS OF FUNDS RECEIVED FROM THE CLEARWIRE ACCOUNT

	Option 1		Option 2		
	Total funds from the Clearwire account going to fund the Jumbo-Tron at CATS Stadium		Funds from the Clearwire Account to be split between Jumbo-Tron at CATS Stadium and KATS TV		
		KATS TV		CATS Stadium	Totals
Total amount received from the Clearwire account YTD as of August 31, 2010	164,870.08	0.00		164,870.08	164,870.08
Monthly payments for the 2010-2011 year	60,000.00	30,000.00		30,000.00	60,000.00
Monthly payments for the 2011-2012 year	61,800.00	30,900.00		30,900.00	61,800.00
Monthly payments for the 2012-2013 year	63,660.00	31,830.00		31,830.00	63,660.00
Monthly payments for the 2013-2014 year	65,568.00	32,784.00		32,784.00	65,568.00
Monthly payments for the 2014-2015 year	67,536.00	33,768.00		33,768.00	67,536.00
Grand Total of Funds received from Clearwire at August 31, 2015	483,434.08	159,282.00		324,152.08	483,434.08
Cost of Jumbo-Tron	296,173.00				
Cost of Control Room	150,000.00				
Total Cost	446,173.00				

Payment Schedule		Balance Remaining
Total Cost	446,173.00	
Initial Payment	164,870.08	281,302.92
Payments during the 2010-2011 year	60,000.00	221,302.92
Payments during the 2011-2012 year	61,800.00	159,502.92
Payments during the 2012-2013 year	63,660.00	95,842.92
Payments during the 2013-2014 year	65,568.00	30,274.92
Payments during the 2014-2015 year	67,536.00	0.00

EXHIBIT CC

Edinburg CISD (Stadium)
Amaro Tijerina
411 n 8th Ave
Drawer 990
Edinburg, TX USA 78541
Phone:
Fax: 956-383-7687
Email: a.tijerina@ecisd.us

9/Sep/2010
Quote valid for: 60 days
Terms: 30% W/ORDER, 60% PBS, 10% N 30
FOB: DESTINATION
Delivery: 10 Weeks ARO

Reference: *Note - Below pricing is Buyboard Pricing

Item No.	Model	Description	Qty	Price
1	**SSL-192x336-23**	**SSL-192x336-23** Matrix: 192 lines by 336 columns Line Spacing: 23mm LED Color: RED, GREEN, AND BLUE- - 4.4 Trillion COLORS Cabinet Dimensions: 14' 10" H X 25' 9" W X 0' 9" D (Approx. Dimensions) Weight: Unpackaged 4665 lbs per display; Packaged 8865 lbs per display	1	**$278,708.00**
	Front End Video Upgrade (Video Switcher, Instant Replay, Monitor, DVD Player and Control Rack)	Front End Video Upgrade (Video Switcher, Instant Replay, Monitor, DVD Player and Control Rack)	1	
	Camera Kit (Canon GL2 Camera, Extended Life Battery, Tripod, Case adn 100' BNC Cable)	Camera Kit (Canon GL2 Camera, Extended Life Battery, Tripod, Case adn 100' BNC Cable)	3	
	W-1489	Fiber Optic Cable; 50 µm Multimode; 6 Fiber with non-terminated ends	1000 Ft.	
	FREIGHT	Shipping to site	1	
	Installation Supervision	On site installation supervision, service, and operator training.	1	
	Engineering Certification	Engineering Certification	1	
2	**ID_48x384_BL_O**	**48in x 32ft backlit sponsor/identification panel** Weight: Packaged 850 lbs per display	1	**$9,965.00**
3	**7'4.8" high x 3'2" wide Backlit ID Panel**	**7'4.8" high x 3'2" wide Backlit ID Panel**	4	**$7,500.00**
Services				
4	**One (1) Year Standard Parts and Labor**	**One (1) Year Standard Parts and Labor - SSL-192x336-23**	1	
	G5G5 for Quote 313804-1-5 Main Equipment List	Five Years Gold Extended Service Coverage for: SSL-192x336-23 @1 and Front End Video Upgrade @1	1	

TOTAL PRICE: $296,173.00

EXHIBIT CC-2

Alternate Equipment: 1

Item No.	Model	Description	Qty	Price
1	**SSL-160x288-23**	**SSL-160x288-23** Matrix: 160 lines by 288 columns Line Spacing: 23mm LED Color: RED, GREEN, AND BLUE- - 4.4 Trillion COLORS Cabinet Dimensions: 12' 5" H X 22' 1" W X 0' 9" D (Approx. Dimensions) Max Power: 13104 Max Watts/Display Weight: Unpackaged 3335 lbs per display; Packaged 6335 lbs per display	1	**$220,216.00**
	Front End Video Upgrade (Video Switcher, Instant Replay, Monitor, DVD Player and Control Rack)	Front End Video Upgrade (Video Switcher, Instant Replay, Monitor, DVD Player and Control Rack)	1	
	Camera Kit (Canon GL2 Camera, Extended Life Battery, Tripod, Case adn 100' BNC Cable)	Camera Kit (Canon GL2 Camera, Extended Life Battery, Tripod, Case adn 100` BNC Cable)	3	
	W-1489	Fiber Optic Cable; 6 Fiber with non-terminated ends	1000	
	FREIGHT	Shipping to site	1	
	Installation Supervision	On site installation supervision, service, and operator training.	1	
	Engineering Certification	Engineering Certification	1	
2	**ID_48x384_BL_O**	**48in x 32ft backlit sponsor/identification panel** Weight: Packaged 850 lbs per display	1	**$9,965.00**
3	**12'4.8" high x 4'11.7" wide Backlit ID Panel**	**12'4.8" high x 4'11.7" wide Backlit ID Panel**	2	**$9,170.00**
Services				
4	**One (1) Year Standard Parts and Labor**	**One (1) Year Standard Parts and Labor - SSL-160x288-23**	1	
	G5G5 for Quote 313804-1-5 Alternate 1 Equipment List	Five Years Gold Extended Service Coverage for: SSL-160x288-23 @1 and Front End Video Upgrade @1	1	

TOTAL PRICE: $239,351.00

EXHIBIT CC-3

Notes: Includes Supervision Only for entire installation process.

Exclusions:

- **Electrical Installation**
- **Structure**
- **Power**
- **Technical Support/Installation Support**
- **Labor to Pull Signal Cable**
- **Duties**
- **Customs Clearance**
- **Physical/Mechanical Installation**
- **Foundation**
- **Hoist**
- **Signal Conduit**
- **Applicable Permits**
- **Taxes**

Unless expressly stated otherwise in this Quote # 313804-1 Rev 8 or the attachments, if Daktronics performs installation of the Equipment, the price quoted does not include the following services pertaining to physical installations: digging of footings (including dirt removal), any materials fabrication, installation of steel cages, rebar, or bolt attachments, or pouring and finishing of concrete footings. Those service may be provided for an additional cost beyond the quoted price. Purchaser shall be fully responsible for any and all additional costs plus overhead in the event anything unexpected of any nature whatsoever is found while digging the footings including but are not limited to rock, water, utility lines, pipes or any other unforeseen circumstance. The Purchaser acknowledges and agrees that it is fully responsible for all site conditions.

Installation Responsibilities:

If applicable please reference Attachment A for Installation Responsibilities.

Ad/ID Copy Approval Process

Daktronics will process your proofs on orders that include advertising and identification panels. Your digital files and copy layouts should conform to graphic file standards document, SL-04116. The digital data files and copy layouts must be submitted at the time of your order and our proofs need to be approved two weeks prior to your initial anticipated ship date. Advertising and identification panels not receiving proof approvals in time will be shipped without copy in our standard finish.

Pete Vela

Matthew James

Pete Vela
PHONE:
FAX: 605-697-4746
EMAIL: Pete.Vela@daktronics.com

Matt James
PHONE:
FAX: 605-697-4746
EMAIL: Matt.James@daktronics.com

Terms And Conditions:

The Terms and Conditions which apply to this order available on request.

SL-02375 Standard Terms and Conditions of Sale	(www.daktronics.com/terms_conditions/SL-02375.pdf)
SL-02374 Standard Warranty and Limitation of Seller's Liability	(www.daktronics.com/terms_conditions/SL-02374.pdf)
SL-07862 Software License Agreement	(www.daktronics.com/terms_conditions/SL-07862.pdf)
SL-04116 Graphic File Standards	(www.daktronics.com/terms_conditions/SL-04116.pdf)

Acceptance:

The Undersigned has actual authority to execute this document and Daktronics, Inc is relying upon such authority.

The parties hereby acknowledge and agree that the terms and conditions contained within this Quote along with the terms and conditions of the Daktronics Standard Terms and Conditions, the Standard Warranty and Limitations of Liability, and/or the Software License Agreement (together, the "Terms and Conditions") constitute the full and final understanding of the parties regarding the sale of equipment and/or the provision of services and entirely replace and supersede any previous understanding or agreement between the parties. By executing this agreement, Purchaser acknowledges that it has had opportunity and means to review the Terms and Conditions as provided in the website addresses above. In the alternative, hardcopy of these Terms and Conditions will be provided upon request. Further it is acknowledged and agreed that the price of the equipment and/or the provision of services contained within this agreement are expressly conditioned upon Purchaser's acceptance of the Terms and Conditions without change. Any modification of the Terms and Conditions may require a corresponding change in price. Accordingly, the Purchaser acknowledges and agrees to these Terms and Conditions as evidenced by its attestation below.

EXHIBIT CC-4

Customer Signature _____ Date _____

Print Name _____ Title _____

Purchase Order Information:

Edinburg CISD (Stadium) PO# _____ PO Date _____

Purchaser hereby confirms that the equipment is to be delivered to, and may be installed by Purchaser or Daktronics (as indicated elsewhere herein) at the address indicated on page one (1) of the agreement unless otherwise specified below:

☐ Same as Bill to

Ship To:

Company

Contact Person

Address

City

State Zip

Telephone

Fax

Email

☐ Same as Ship to

End User:

*Company

Contact Person

Address

*City

*State *Zip

Telephone

Fax

Email

*Required Information

BILL TO (if different from quoted address):

Company

Contact Person

Address

City

State Zip

Telephone

Fax

Email

EXHIBIT CC-5

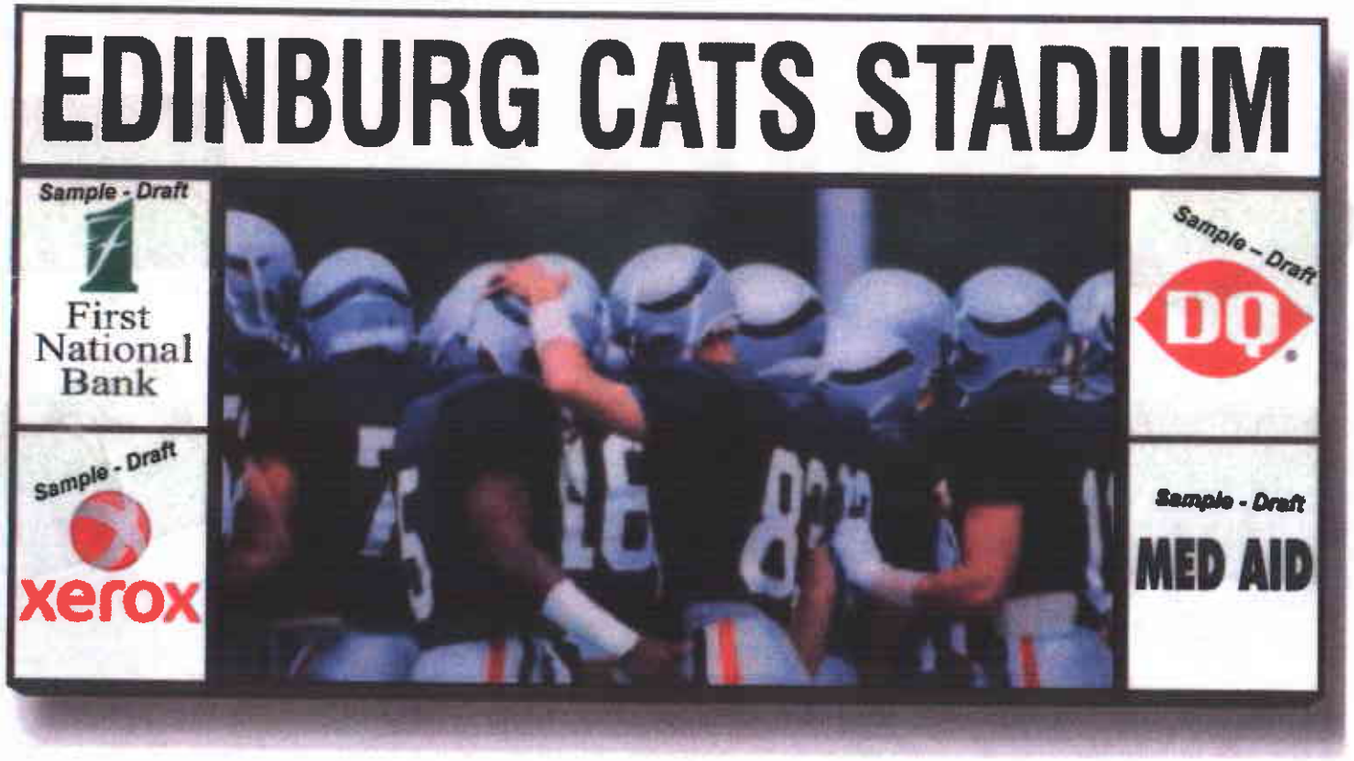

- Backlit Identification display (Top)
- Daktronics Video display SSL-23s-160x288
- Backlit Sponsor displays (Left/Right Side)

EXHIBIT CC-6

DAKTRONICS

EDINBURG CATS STADIUM

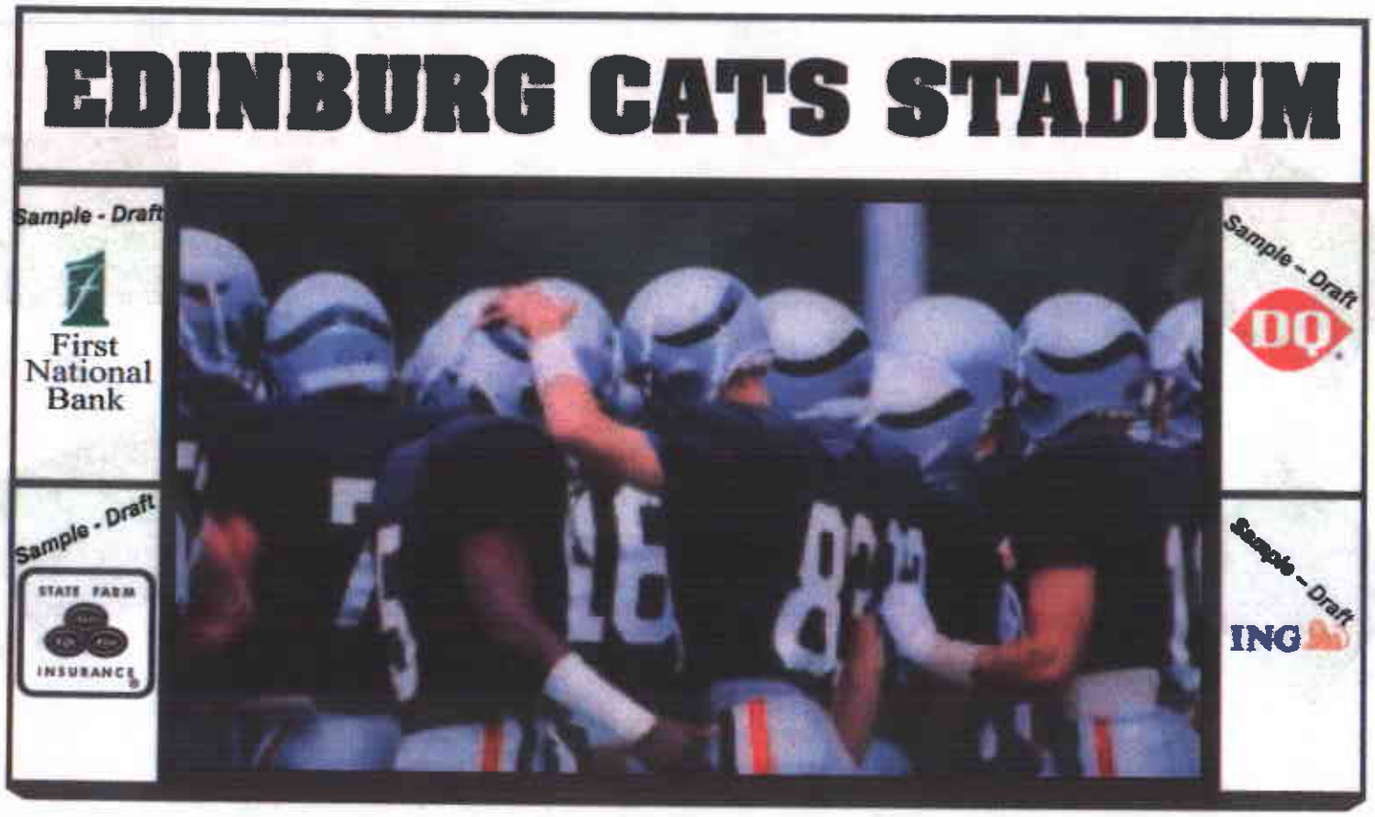

- Backlit Identification display (Top)
  4'0" high x 32'0" wide
- Daktronics Video display
  SSL-192x336-23
  14'9.6" high x 25'8" wide
- Backlit Sponsor displays (Left/Right Side) @4
  7'4.8" high x 3'2" wide

EXHIBIT CC-7

DAKTRONICS

EDINBURG CATS STADIUM

- Backlit Identification display (Top)
  4'0" high x 32'0" wide
- Daktronics Video display
  SSL-192x336-23
  14'9.6" high x 25'8" wide
- Backlit Sponsor displays (Left/Right Side) @4
  7'4.8" high x 3'2" wide

EXHIBIT CC-8

DAKTRONICS

SSL Video Sizes

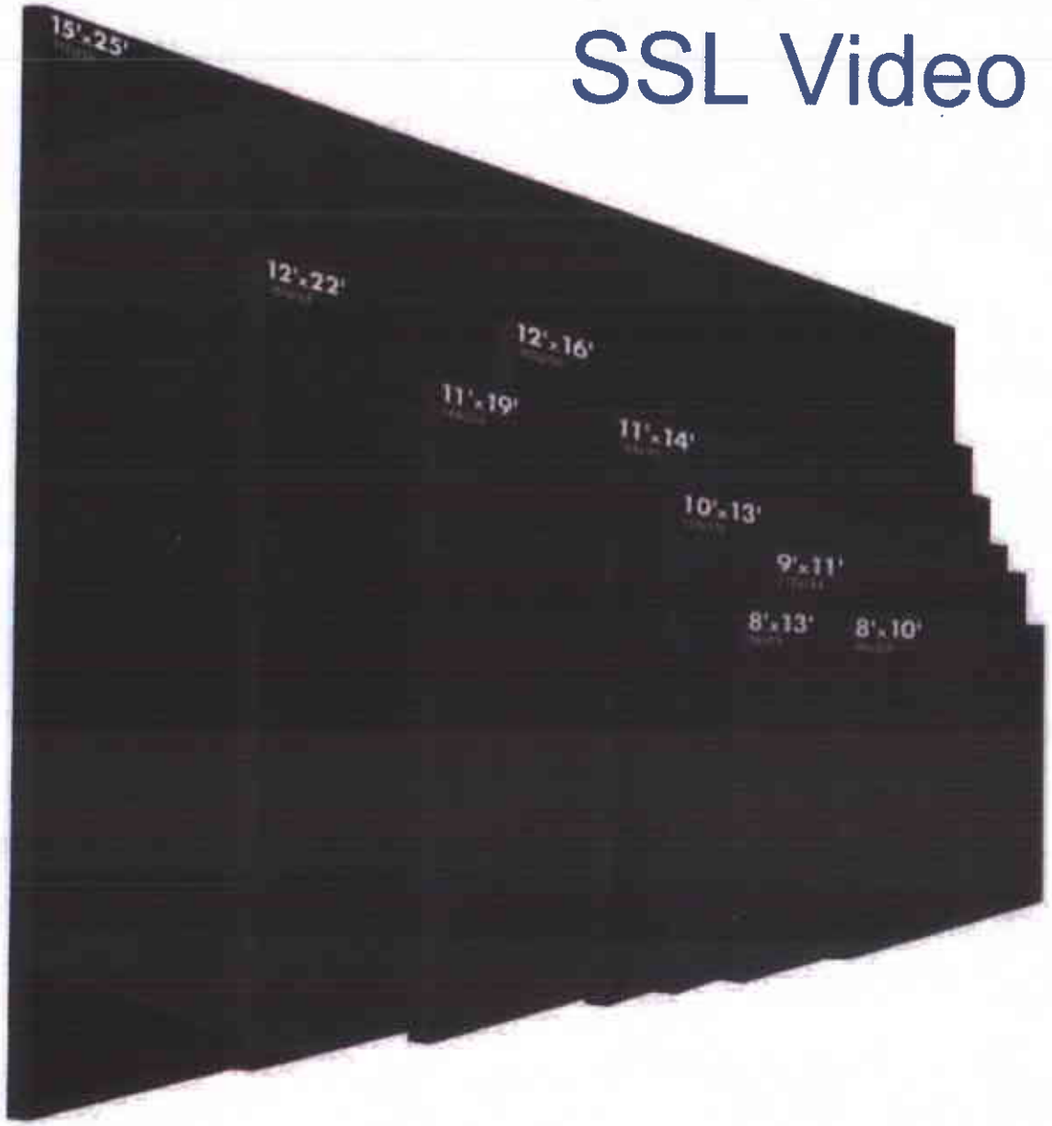

EXHIBIT CC-9

DAKTRONICS

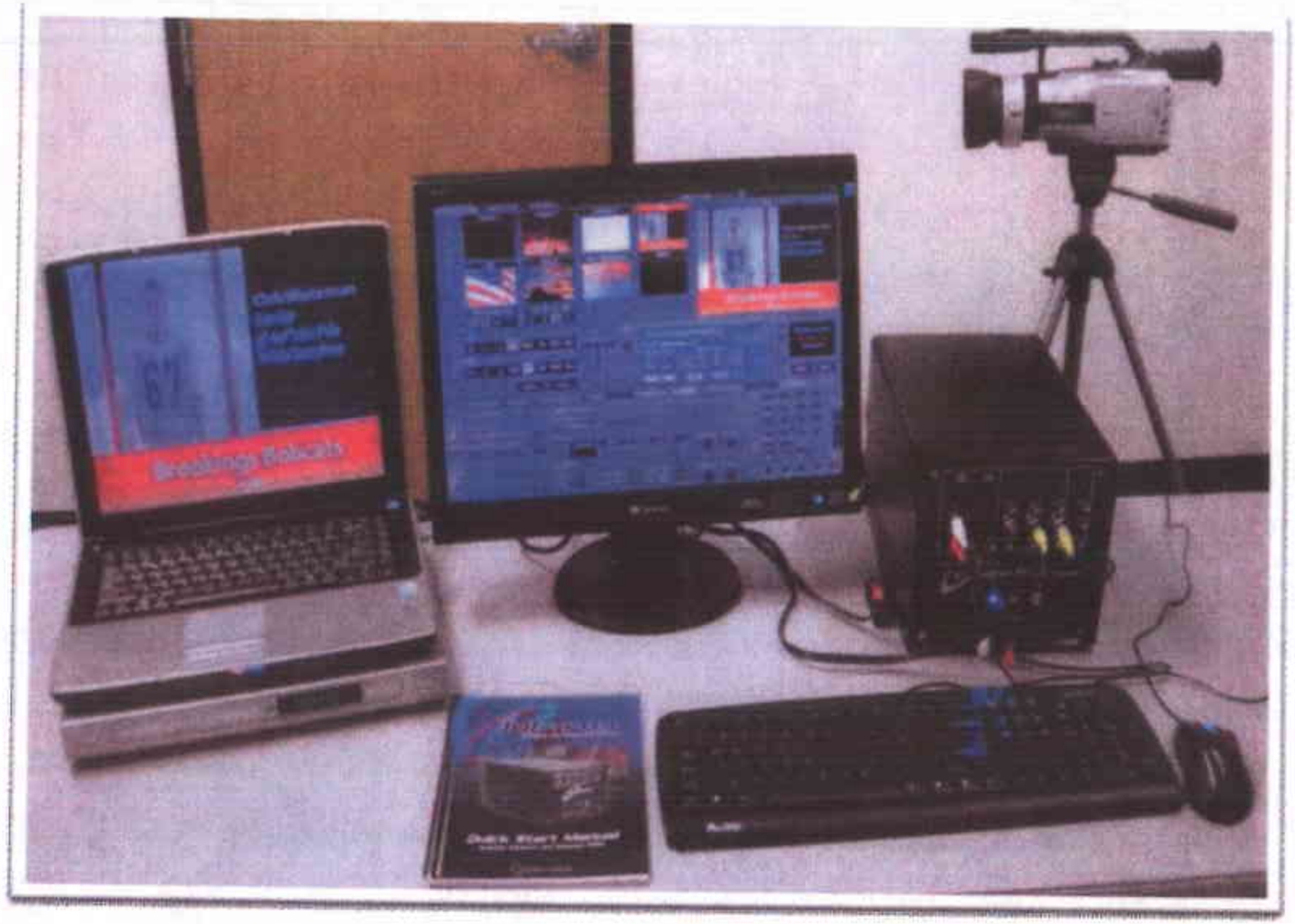

Front End Equipment

EXHIBIT CC-10

DAKTRONICS

Daktronics Brings Live Video To Schools

- Play animations, statistics, advertisements and live video in 4.3 trillion colors.
- Less front-end equipment and fewer personal for operation
- Affordable solution for smaller facilities

EXHIBIT CC-11

DAKTRONICS

Video Controller Specs

Features

- Titles
- Audio Mixing
- 200+ transitions
- AVI and WMV record
- Simple media capturing
- Live switching of 3 cameras
- Integrated VCR clip playback
- Professional video editing
- iVGA graphics import
- Times Picture playback
- Live Internet Streaming
- Live keying

Special Effects

- Peels
- Panning
- Slow motion
- Animated titles
- Multiple video layers
- 3D page curls
- 3D rotation
- Soft edges
- Wipes

Audio Specs

- Audio input 2 balanced Mic/Line inputs
- 1 stereo line in
- Audio output 1 stereo line out
- 2 unbalanced RCA outs
- 1 stereo headphone out

Video Specs

- iVGA input 1 ethernet network
- 3 video inputs
- 1 video output

EXHIBIT CC-12

DAKTRONICS

Video Controller Features

VIRTUAL VCR

Enhanced with animations and edited videos. Total control over editing, layout and playback.

PICTURES AND TITLES

Professional templates for team's lineup

Click and replace text feature.

STORYBOARD

Rearrange pieces of video and click play.

Allows for multiple video layers.

EXHIBIT CC-13

DAKTRONICS

Video Controller Features

VIDEO EFFECTS

Hundreds of professional transitions.

AUDIO MIXER

Separate level controls with single output volume control.

Talk Over button gives one microphone temporary priority while reducing all other inputs.

EXHIBIT CC-14

DAKTRONICS

Video Control Rack and TriCaster

EXHIBIT CC-15

DAKTRONICS

APPROVAL TO PURCHASE VOYAGER EXPANDED LEARNING INTERVENTION MATERIALS FOR STRUGGLING 6th THROUGH 8th GRADE READING AND 6th THROUGH 8th GRADE MATH STUDENTS AND CONSULTANT SERVICES FOR MIDDLE SCHOOL TEACHERS FOR THE 2010-2011 SCHOOL YEAR

Superintendent's Recommendation
That the Board of Trustees give approval to purchase Voyager Expanded Learning Intervention materials for struggling 6th through 8th grade Reading and 6th through 8th grade math students and consultant services for middle school teachers for the 2010-2011 school year.

Rationale
Voyager Expanded Learning® is a leading provider of in-school core reading programs, reading and math intervention programs, and professional development programs for school districts throughout the United States. Voyager Passport™ Reading Intervention System is patented for their "method and system for preventing illiteracy." Voyager Expanded Learning also provides professional development in research-based reading instruction to thousands of teachers. Vmath®, Voyager's math intervention system, is designed to strengthen the math foundation of struggling students and accelerate their learning to grade level. Numerous independent evaluations provide dramatic proof of performance across student populations. This purchase meets purchasing law compliance and is a sole source. This purchase was negotiated by Ronaldo J. Cavazos, Federal Programs Director.

Connections to the District Plan:
District Goal: Goal 1-Academic Excellence in all grade levels: ECISD shall provide a diversified and innovative curriculum that focuses on comprehension, critical and creative thinking, application and problem solving for all students to achieve commended performance.
District Goal: Goal 2- Professional Development: The district will plan, develop, and implement professional development opportunities for all teachers to provide a quality education for all students.

Paperwork Impact
Minimal

Budgetary Information:

285-11-6399-00-999-130100 $289,241.10
211-13-6291-00-999-130000 $ 30,000.00
Purchase Total $319,241.10

Account	Description	Appro.	Enc.	Exp.	Balance
285-11-6399-00-999-130100	General Supplies	404,484	0	0	404,484
211-13-6291-00-999-130000	Consultant Services	400,000	11,400	0	388,600

Resource Personnel
Dr. René Gutiérrez, Superintendent of Schools
Maria Luisa Guerra, Assistant Superintendent for Instruction and Support Services
Ronaldo J. Cavazos, Director of Federal Programs
Yvonne Chapa, Reading Specialist

Board Policy Reference and Compliance: This item is in accordance with Board Policy CH (Local): Purchasing and Acquisitions.

Requested by: Ronaldo J. Cavazos

Approved by: Maria Luisa Guerra

Within Budgetary Allocation: Sylvia D. Garcia

Finance Department Approval: Rigoberto Abrego

Recommended by: Dr. René Gutiérrez, Superintendent of Schools

EXHIBIT DD **PAGES** 1-6

09-10-10P02:17 RCVD A1

Cambium Learning Group | Voyager

PROPOSAL TO: Edinburg CISD	**PRESENTED BY: Veronica Fuentes**
School/District	Sales Rep Name
Address: 411 North 8th St.	Address
City, State, Zip: Edinburg, TX	City, State, Zip
Contact Person: Ronaldo J. Cavazos	Phone
Email	Email
Phone/Fax	Fax

Vmath 2nd Edition 2-8

	ISBN	Product ID	#	cost/unit	total cost/item
Vmath Level C Teacher's Resource Kit	978-1-4168-6202-4	189771	0	$399	$0.00
Vmath Level D Teacher Resource Kit Second Edition	978-1-4168-6112-6	189798	0	$399	$0.00
Vmath Level E Teacher Resource Kit Second Edition	978-1-4168-6114-X	189819	0	$399	$0.00
Vmath Level F Teacher Resource Kit Second Edition	978-1-4168-6116-4	189835	6	$399	$2,394.00
Vmath Level G Teacher Resource Kit Second Edition	978-1-4168-6106-5	189851	7	$399	$2,793.00
Vmath Level H Teacher Resource Kit Second Edition	978-1-4168-6108-9	189878	5	$399	$1,995.00
Vmath Level I Teacher Resource Kit Second Edition	978-1-4168-6110-2	189907	5	$399	$1,995.00
Vmath Level C Student Math Pack	978-1-4168-6201-7	189763	0	$79	$0.00
Vmath Level D Student Math Pack Second Edition	978-1-4168-6113-3	189780	0	$79	$0.00
Vmath Level E Student Math Pack Second Edition	978-1-4168-6115-7	189801	0	$79	$0.00
Vmath Level F Student Math Pack Second Edition	978-1-4168-6117-1	189827	150	$79	$11,850.00
Vmath Level G Student Math Pack Second Edition	978-1-4168-6107-2	189843	150	$79	$11,850.00
Vmath Level H Student Math Pack Second Edition	978-1-4168-6109-6	189860	200	$79	$15,800.00
Vmath Level I Student Math Pack Second Edition	978-1-4168-6111-9	189894	200	$79	$15,800.00
Subtotal for Product					$64,477.00
Shipping and Handling				10.0%	$6,447.70
Applicable Sales Tax** Please remember to add applicable sales tax for your state				0.00%	$0.00
Total for Product including Shipping, Handling, and Taxes					$70,924.70
Technology					
VmathLive - Student Access School Year	978-1-4168-5937-6	189958	6	$3,500	$21,000
VmathLive - Student Access Jan- End of School Year	978-1-4168-54950-5	189966	0	$15	$0
Subtotal for Technology					$21,000.00
Professional Development/Implementation Product Training					
Coach and Teacher Model Training- Vmath 3-8	XMA-T2	257711	0	$2,500.00	$0.00
Support/Training Day Vmath 3-8	XMA-T4	257738	10	$1,500.00	$15,000.00
Subtotal for Training					$15,000.00
VPORT Access for VMATH		272719	0	$1.50	$0.00
Subtotal for VPORT					$0.00
Total for Product, Technology and Training					$106,924.70

Cambium Learning, Inc
4185 Salazar Way
Frederick, CO 80503
Fax: (888) 819-7767
www.voyagerlearning.com

→EXHIBIT DD

Cambium LEARNING Group | Voyager

PROPOSAL TO: Edinburg CISD	**PRESENTED BY: Veronica Fuentes**
School/District: Edinburg CISD	Sales Rep:
Address: 411 North 8th	Address:
City, State, Zip: Edinburg, TX	City, State, Zip:
Contact Person: Ronaldo J. Cavazos	Phone:
Email: r.cavazos@ecisd.us	Email:
Phone/Fax: 956-289-2300 ext. 2044	Fax:

Voyager Passport Reading Journeys 2008

Classroom Systems	ISBN	Product ID	#	cost/unit	total cost/item
Includes product 1 teacher and 30 students					
Voyager Passport Reading Journeys Beginnings Classroom System (30 kids)	978-1-4168-0963-x	190297	1	$7,500	$7,500.00
Voyager Passport Reading Journeys 1 Classroom System (30 kids)	978-1-4168-0989-x	190300	1	$7,500	$7,500.00
Voyager Passport Reading Journeys 2 Classroom System (30 kids)	978-1-4168-0902-9	190318	1	$7,500	$7,500.00
Includes product 1 teacher and 15 students					
Voyager Passport Reading Journeys Beginnings Classroom System (15 kids)	978-1-4168-0799-5	207773	0	$6,000	$0.00
Voyager Passport Reading Journeys 1 Classroom System (15 kids)	978-1-4168-0976-x	209171	0	$6,000	$0.00
Voyager Passport Reading Journeys 2 Classroom System (15 kids)	978-1-4168-0992-x	209373	0	$6,000	$0.00
Includes product 1 teacher and 10 students					
Voyager Passport Reading Journeys Beginnings Classroom System (10 kids)	978-1-4168-0997-5	209411	0	$5,500	$0.00
Voyager Passport Reading Journeys 1 Classroom System (10 kids)	978-1-4168-0998-2	209429	0	$5,500	$0.00
Voyager Passport Reading Journeys 2 Classroom System (10 kids)	978-1-4168-0999-9	209437	0	$5,500	$0.00
Teacher Materials					
Voyager Passport Reading Journeys Beginnings Teacher Materials	978-1-4168-0961-6	209058	0	$4,500	$0.00
Voyager Passport Reading Journeys I Teacher Materials	978-1-4168-0890-9	208207	0	$4,500	$0.00
Voyager Passport Reading Journeys II Teacher Materials	978-1-4168-0977-7	209189	0	$4,500	$0.00
Additional Student Materials					
Voyager Passport Reading Journeys Beginnings SRP w/ Anthology	978-1-4168-0886-2	190182	45	$99	$4,455.00
Voyager Passport Reading Journeys Beginnings Student Notebook (w/out anthology)	978-1-4168-0889-3	190191	175	$59	$10,325.00
Voyager Passport Reading Journeys 1 SRP w/ Anthology	978-1-4168-0967-8	190211	95	$99	$9,405.00
Voyager Passport Reading Journeys 1 SRP w/o Anthology	978-1-4168-0892-3	190220	65	$59	$3,835.00
Voyager Passport Reading Journeys 2 SRP w/ Anthology	978-1-4168-0973-9	190246	145	$99	$14,355.00
Voyager Passport Reading Journeys 2 SRP w/o Anthology	978-1-4168-0979-1	190254	60	$59	$3,540.00
Additional Teacher Resource Kits (Not Used as Stand Alone)					
Voyager Passport Reading Journeys Beginnings Teacher Resource Kit	978-1-4168-0887-9	191644	8	$600	$4,800.00
Voyager Passport Reading Journeys I Teacher Resource Kit	978-1-4168-0968-5	191687	3	$600	$1,800.00
Voyager Passport Reading Journeys II Teacher Resource Kit	978-1-4168-0974-6	191724	7	$600	$4,200.00
Subtotal for Product					$79,215.00
				10.00%	
				0.00%	
Total for Product including Shipping, Handling, and Taxes					$87,136.50
Professional Development/Implementation Product Training					
Coach and Teacher Model Training- Voyager Passport Reading Journeys	XPRJ-T2	258301	0	$2,500.00	$0.00
Support/Training Day Voyager Passport Reading Journeys	XPRJ-T4	258327	10	$1,500.00	$15,000.00
Subtotal for Training					$15,000.00
VPORT Access for PASSPORT RJ		272701	0	$1.50	$0.00
Subtotal for VPORT					$0.00
Total for Product and Training					$102,136.50

Cambium Learning, Inc
4185 Salazar Way
Frederick, CO 80503
Fax: (888) 819-7767
www.voyagerlearning.com

→EXHIBIT DD-2

Cambium LEARNING Group | Voyager

PROPOSAL TO: Edinburg CISD	**PRESENTED BY: Veronica Fuentes**
School/District: Edinburg CISD	Sales Rep Name:
Address: 411 North 8th	Address
City, State, Zip: Edinburg, TX	City, State, Zip
Contact Person: Ronaldo J. Cavazos	Phone:
Email: r.cavazos@ecisd.us	Email:
Phone/Fax: 956-289-2300	Fax

Technology

	ISBN	Product ID	#	cost/unit	total cost/item
Ticket to Read					
Ticket To Read - Student Access School Year	978-1-4168-0726-1	189915	0	$30	$0.00
Ticket To Read -Student Access Partial Year	978-1-4168-0826-8	189923	0	$15	$0.00
Ticket To Read- Student Access Summer School	978-1-4168-2036-9	210770	0	$10	$0.00
Ticket To Read - Site Access School Year	978-1-4168-1466-5	189931	30	$3,500	$105,000.00
Ticket To Read - Site Access Partial Year	978-1-4168-0802-2	189940	0	$2,500	$0.00
Ticket to Read and VmathLive					
Ticket To Read & VmathLive- Site Access School Year	978-1-4168-6206-2	219951	0	$6,000	$0.00
VmathLive					
VmathLive - Student Access School Year (A)	978-1-4168-5937-6	189958	0	$30	$0.00
VmathLive - Student Access Jan- End of School Year (A)	978-1-4168-5950-5	189966	0	$15	$0.00
VmathLive - Student Access Summer School (B)	978-1-4168-5951-2	189974	0	$10	$0.00
VmathLive - Site Access School Year	978-1-4168-6203-1	189982	0	$3,500	$0.00
VmathLive - Site Access Partial Year	978-1-4168-6204-8	259741	0	$2,500	$0.00
Subtotal for Product					$105,000.00
Professional Development/Implementation Product Training					
Ticket to Read Support /Training	XT2R	258546	0	$2,500.00	$0.00
VmathLive Support/Training	XMA-T5	257746	0	$1,500.00	$0.00
Subtotal for Training					$0.00
Total for Product and Training					$105,000.00

Cambium Learning, Inc
4185 Salazar Way
Frederick, CO 80503
Fax: (888) 819-7767
www.voyagerlearning.com

→**EXHIBIT** DD-3

Cambium LEARNING Group | Voyager

PROPOSAL TO: Edinburg CISD	**PRESENTED BY:**
School/District: Edinburg CICD	Sales Rep Name: Veronica Fuentes
Address:411 North 8th	Address:
City, State, Zip: Edinburg, TX	City, State, Zip
Contact Person: Ronaldo J. Cavazos	Phone
Email: r.cavazos@ecisd.us	Email
Phone/Fax:956-289-2300	Fax

Voyager Passport Levels A-F

	ISBN	Product ID	#	cost/unit	total cost/item
Voyager Passport Level A Teacher Resource Kit	978-1-4168-0262-4	190001	0	$349	$0.00
Voyager Passport Level B Teacher Resource Kit	978-1-4168-0264-8	190027	0	$349	$0.00
Voyager Passport Level C Teacher Resource Kit	978-1-4168-0360-7	190043	0	$349	$0.00
Voyager Passport Level D Teacher Resource Kit	978-1-4168-0463-5	190060	0	$349	$0.00
Voyager Passport Level E Teacher Resource Kit	978-1-4168-0565-6	190086	0	$349	$0.00
Voyager Passport Level F Teacher Resource Kit	978-1-4168-0661-5	190107	1	$349	$349.00
Voyager Passport Level A Student Reading Pack	978-1-4168-0283-9	189991	0	$109	$0.00
Voyager Passport Level B Student Reading Pack	978-1-4168-0284-6	190019	0	$109	$0.00
Voyager Passport Level C Student Reading Pack	978-1-4168-0370-6	190035	0	$109	$0.00
Voyager Passport Level D Student Reading Pack	978-1-4168-0474-1	190051	0	$109	$0.00
Voyager Passport Level E Student Reading Pack	978-1-4168-0576-2	190078	0	$109	$0.00
Voyager Passport Level F Student Reading Pack	978-1-4168-0671-4	190094	40	$109	$4,360.00
Voyager Passport Level A Student Consumables	978-1-4168-0266-2	205330	0	$59	$0.00
Voyager Passport Level B Student Consumables	978-1-4168-0271-6	205381	0	$59	$0.00
Voyager Passport Level C Student Consumables	978-1-4168-0362-1	205971	0	$59	$0.00
Voyager Passport Level D Student Consumables	978-1-4168-0465-9	206471	0	$59	$0.00
Voyager Passport Level E Student Consumables	978-1-4168-0568-7	206981	0	$59	$0.00
Voyager Passport Level F Student Consumables	978-1-4168-0663-9	207511	0	$59	$0.00
Subtotal for Product					$4,709.00
				10.00%	
				0.00%	
Total for Product including Shipping, Handling, and Taxes					$5,179.90
Professional Development/Implementation Product					
Coach and Teacher Model Training- Voyager Passport	XNPP-T2	257842	0	$2,500.00	$0.00
Support/Training Day Voyager Passport	XNPP-T4	257869	0	$1,500.00	$0.00
Subtotal for Training					$0.00
VPORT Access for PASSPORT		272698	0	$1.50	$0.00
Subtotal for VPORT					$0.00
Total for Product and Training					$5,179.90

Cambium Learning, Inc
4185 Salazar Way
Frederick, CO 80503
Fax: (888) 819-7767
www.voyagerlearning.com

→EXHIBIT DD-4

Edinburg Consolidated Independent School District
Sole Source Affidavit

RESET FORM

BEFORE ME, the undersigned official, on this day, personally appeared. Todd Buchardt. A person known to me to be the person whose signature appears below, who after being duly sworn upon his oath deposed and said:

1. My name is Todd Buchardt. I am over the age of 18, have never been convicted of a crime and am competent to sign this affidavit.

2. I am an authorized representative of the following company or firm:
   Voyager Expanded Learning, Inc.

3. The above named company or firm is the sole source of the following item(s) or product(s): (Attach list if necessary)
   Vmath, Vmath Live, Passport, Pasaporte, Ticket to Read, and Passport Reading Journeys

4. Competition is providing the above named item(s) is precluded by the existence of a patent, copyright, secret process or monopoly.

5. ~~There is/are no other like item(s) or product(s) available for purchase that would~~ serve the same purpose or function ~~and there is only one price~~ for the above named ~~item(s) or product(s) because of exclusive~~ distribution or marketing ~~rights~~.

6. We certify that no suspension or debarment is in place, which would preclude receiving a federally funded contract.

(Signature)

SUBSCRIBED AND SWORN to before me on this 11th **day of** August, 2010

(Seal)

DANA P. STRYHAL
Notary Public, State of Texas
My Commission Expires
September 17, 2012

(Notary Public, State of Texas*)*

Dana P. Stryhal
(Printed Name)

9.17.12
(Date Commission Expires)

Company Name: Voyager Expanded Learning, Inc.
Address: 1800 Valley View Ln, Ste 400
City, State, Zip: Dallas, TX 75234
Telephone: 214.932.9500 Fax: 214.424.6216
Contact Person: _____ Email: _____

→EXHIBIT DD-5

SOLE SOURCE MEMORANDUM

DATE: September 9, 2010

TO: Rigoberto Abrego, Assistant Superintendent for Finance & Operations

FROM: Ronaldo J. Cavazos CAMPUS: Federal Programs

SUBJECT: SOLE SOURCE AFFIDAVIT FOR Voyager Expanded Learning, Inc.
(Name of Vendor)

PURCHASE AMOUNT: $ 319,241.10 REQUISITION NO:_____

DESCRIPTION OF ITEMS OR SERVICE: (Attach additional documentation, if necessary)

_____

_____

_____

I have contacted a sufficient number of vendors to determine that only one practical source of supply exists. I have initialed the reason(s) why only one source of supply exists and stated it below:

√ - **There is no competitive or similar product.**
The good/service is a one-of-a-kind or patented product, a copyrighted publication available from only one source, or a unique item such as an art work.

_____- **The product is only available from a regulated or natural monopoly.** For example, utilities, gravel from the only pit in the area or some similar situation.

√ - **The product is a component of an existing system which is only available from one supplier.** The replacement of a component or a repair part is only available from the original supplier.

_____ - **The item is produced by non-profit corporations using handicapped workers.** Products made by blind or otherwise handicapped workers are often used by schools, cities, and counties.

_____ - **The item is produced by prison workers.** The state benefits from the sale of these items.

_____- ***There are no other items available in the marketplace that have the same fit, form and function of the items being purchased.***

9/9/10

Signature Date

(Instructions: Campuses & Departments are required to complete this form and attach it to your sole source vendor affidavit. Fax or route all documents, such as Agenda Items, sole source affidavit, sole source memorandum to the Office of Assistant Superintendent for Finance & Operations.)

➔ **EXHIBIT** DD-6