ADDRESS:

1680 E. MARTINDALE RD
SEGUIN, TX 78155

LEGAL DESCRIPTION:

NAVARRO SOUTH ELEMENTARY SCHOOL PLAT
LOT 1 AND 900, BLOCK 1
PLAT PENDING

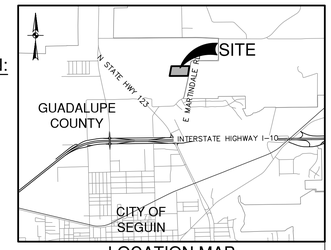

LOCATION MAP
NOT-TO-SCALE

SCALE: 1"= 20'
0' 20' 40' 60'

LPA
ARCHITECTURE ENGINEERING INTERIOR DESIGN
LANDSCAPE ARCHITECTURE PLANNING
210-829-1737 Office
LPADesignStudios.com
1811 South Alamo Street, Suite 100
San Antonio, Texas 78204

11/24/25

STATE OF TEXAS
STACEY L. WEICHERT
84036
LICENSED
PROFESSIONAL ENGINEER

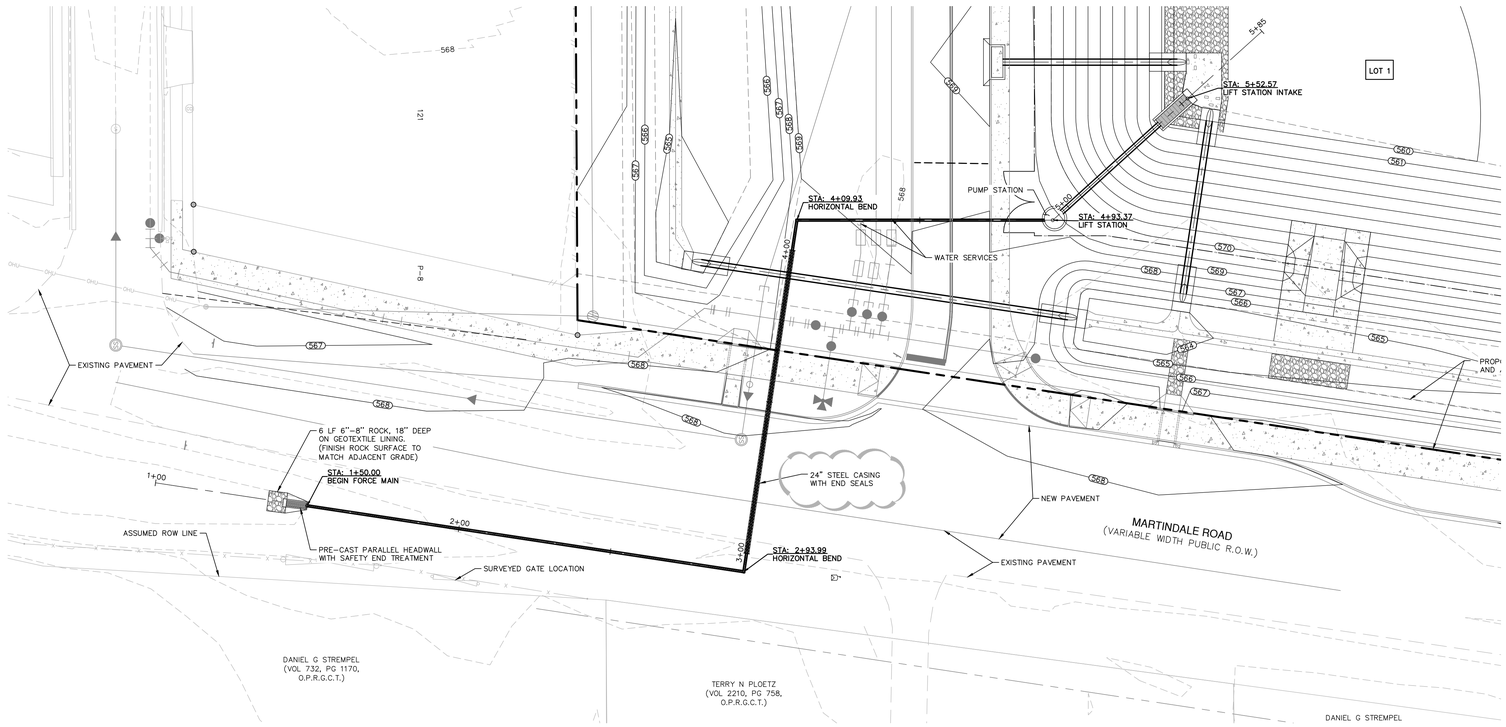

LEGEND

———	PROPERTY LINE
570	EXISTING CONTOURS
570	PROPOSED CONTOURS

LIFT STATION NOTES:

PROVIDE DUPLEX PACKAGED STORM WATER PUMP STATION

- 78" DIAMETER PRE-PACKAGED FIBERGLASS WET WELL
- PROVIDE PACKAGED PUMP STATION (FLYGT OR APPROVED EQUAL)
- CONTACT BARRIE HAMM, 361-500-8547, barrie.hamm@xylem.com
- DUAL PUMP SYSTEM CAPABLE OF PROVIDING REQUIRED DISCHARGE RATE INDEPENDENTLY. PUMP CAPACITY (EACH): 726 GPM @ 14.2' TDH. 3 PHASE/480V - 5 HP
- FLYGT NP3102 LT3 ADAPTIVE 423 PUMP OR EQUAL
- 4" DISCHARGE
- PROVIDE FOUR CONTROL FLOATS - COORDINATE WITH ENGINEER FOR ELEVATION REQUIREMENTS. PUMPS TO EMPTY BASIN WITHIN 48 HOURS OF STORM EVENT.
- STAINLESS IMPELLER, CAST IRON BODY
- PROVIDE STAINLESS CONTROL PANEL BOX WITH VISIBLE EXTERIOR FLASHING ALARM
- HIGH WATER ALARM AND FLASHING LIGHT
- LIFT STATION SHALL BE TESTED AND RAN FOR FUNCTIONALITY AND OPERATION WITH CITY INSPECTOR DURING OR PRIOR TO FINAL INSPECTION OF THE PROJECT, INCLUDING WITH ALTERNATIVE POWER SOURCE.

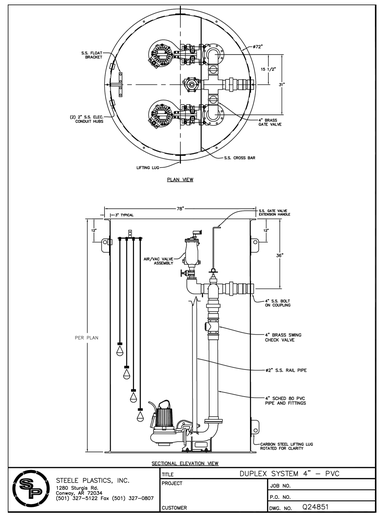

This document and all other project documents, ideas, aesthetics and designs incorporated therein are instruments of service. All project documents are copyright protected, are the property of LPA, Inc. (LPA) and cannot be lawfully used in whole or in part for any project or purpose except as set forth in the contractual agreement between LPA and its Client. The unauthorized disclosure and/or use of the project documents (including the creation of derivative works), may give rise to liability for copyright infringement, unlawful disclosure, use or misappropriation of property rights held by LPA. The unauthorized use of the project documents will give rise to the recovery of monetary losses and damages including attorney fees and costs for which the unauthorized user will be held liable.
Project documents describe the design intent of the work and are not a representation of as-built or existing conditions. LPA is not responsible for any discrepancies between the project documents and the existing conditions.

© LPA, Inc.

FORCE MAIN
STA. 1+00.00 TO END

VERTICAL SCALE: 1" = 5'
HORIZONTAL SCALE: 1" = 20'

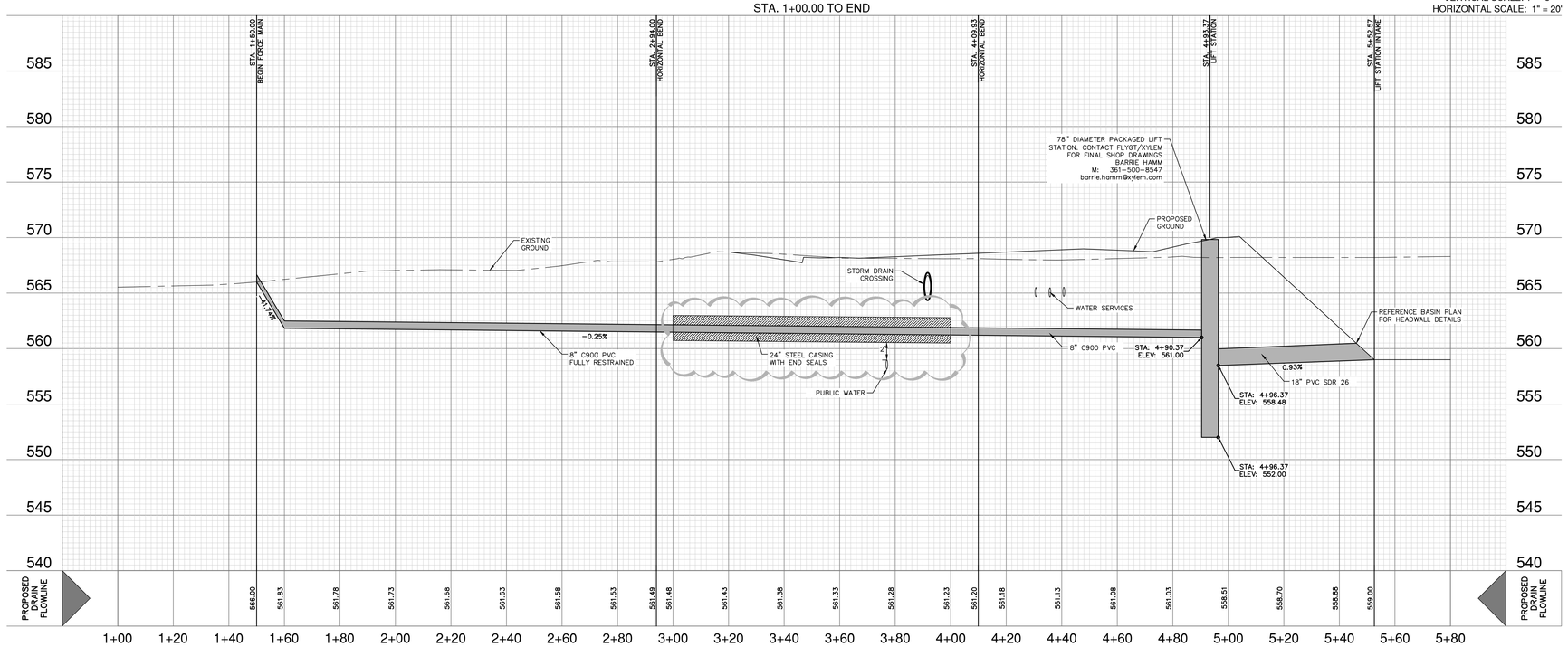

SITE PLAN PERMIT APPROVAL
SEGUIN TEXAS
CAPITAL PROJECTS/ ENGINEERING
SPR0825-0096
December 8, 2025
THIS PERMIT CONFORMS TO CITY UDC & TECHNICAL REQUIREMENTS

PAPE-DAWSON
2000 NW LOOP 410 I SAN ANTONIO, TX 78213 I 210.375.9000
TEXAS ENGINEERING FIRM #470 I TEXAS SURVEYING FIRM #10028800

NAVARRO SOUTH ELEMENTARY SCHOOL
SEGUIN, TEXAS
Developed for
NAVARRO INDEPENDENT SCHOOL DISTRICT

Revision	Date

Submittal	Date
PERMIT SET	08/08/2025
100% BID SET	10/01/2025
ADD 01 : PERMIT SET	10/14/2025
PERMIT COMMENTS	11/24/2025

Job Number	32141
Checked By	
Scale	

LIFT STATION PLAN

C4.07

Date: Nov 25, 2025, 11:55am User ID: nayles.compos
File: P:\1361\43\00\Design\Civil\S1364300.dwg

THIS DOCUMENT HAS BEEN PRODUCED FROM MATERIAL THAT WAS STORED AND/OR TRANSMITTED ELECTRONICALLY AND MAY HAVE BEEN INADVERTENTLY ALTERED. RELY ONLY ON FINAL HARDCOPY MATERIALS BEARING THE CONSULTANT'S ORIGINAL SIGNATURE AND SEAL.